July 1, 1947. S. R. GERBINO ET AL 2,423,380

TOY AIRPLANE EQUIPMENT

Filed April 19, 1946 3 Sheets-Sheet 1

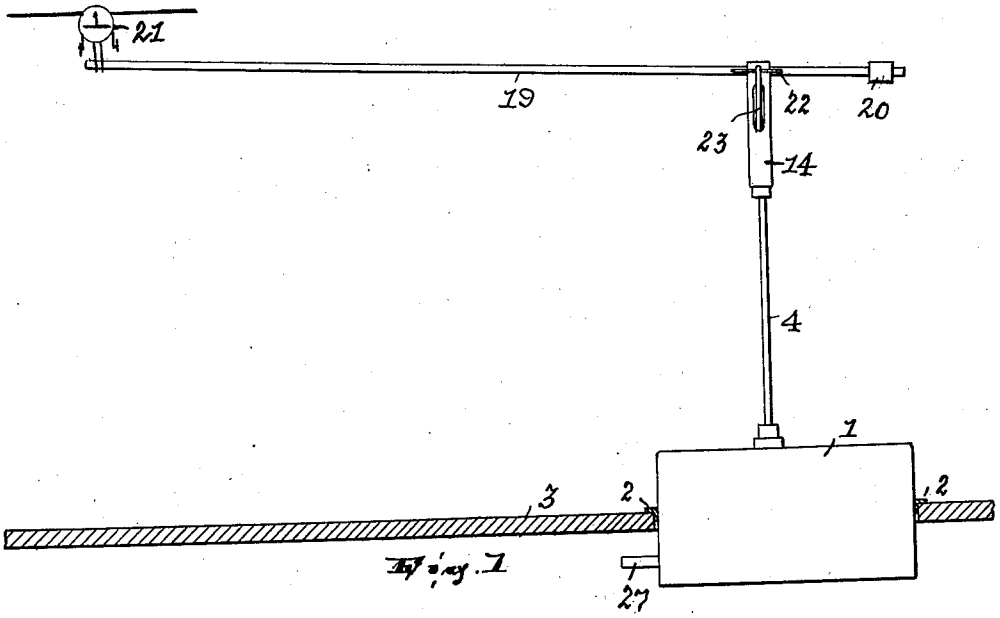

Fig. 1

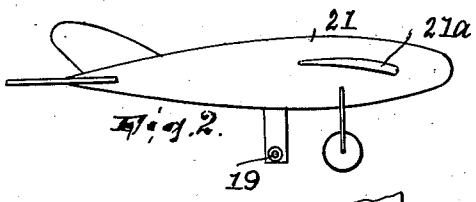

Fig. 2.

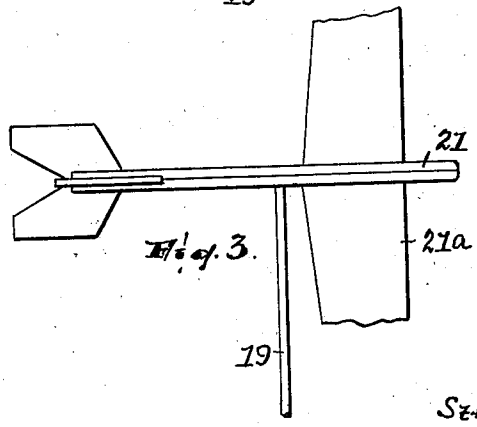

Fig. 3.

INVENTORS,
Stephen R. Gerbino and
BY Daniel E. Whitney,
John W. Steward.
ATTORNEY.

July 1, 1947. S. R. GERBINO ET AL 2,423,380

TOY AIRPLANE EQUIPMENT

Filed April 19, 1946 3 Sheets-Sheet 2

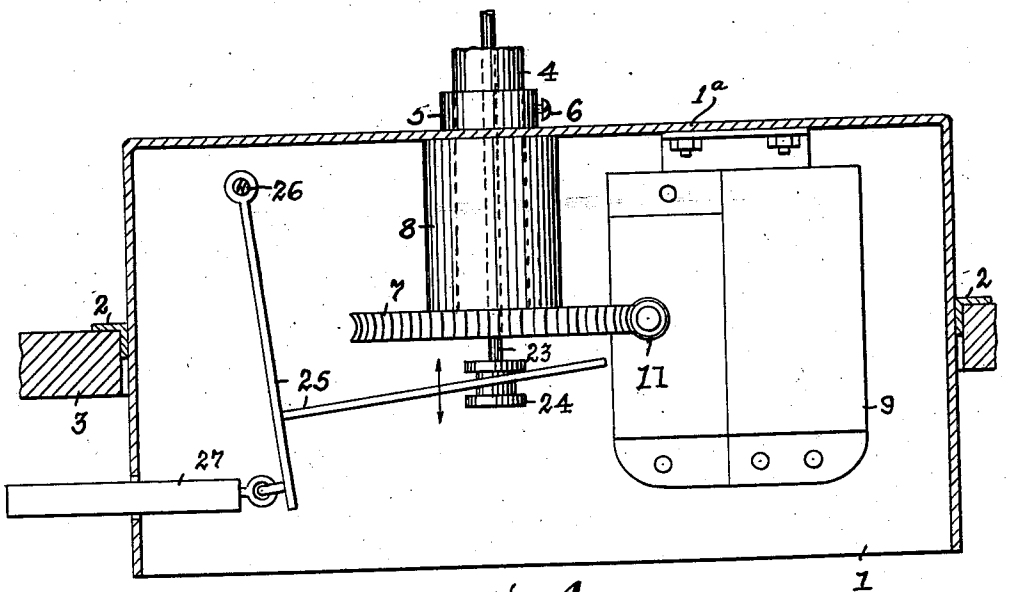

Fig. 4.

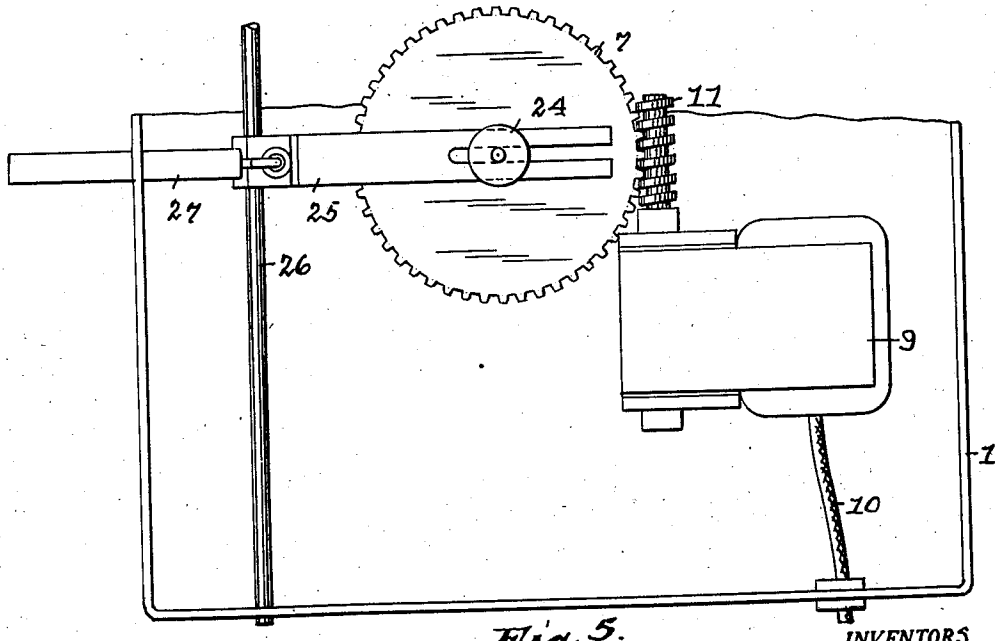

Fig. 5.

INVENTORS,
Stephen R. Gerbino and
Daniel E. Whitney,
BY John W. Leonard,
ATTORNEY.

July 1, 1947. S. R. GERBINO ET AL 2,423,380

TOY AIRPLANE EQUIPMENT

Filed April 19, 1946 3 Sheets-Sheet 3

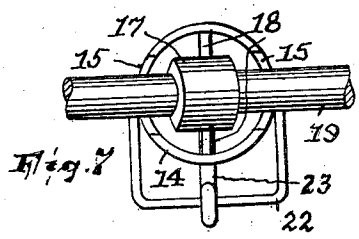

Fig. 7

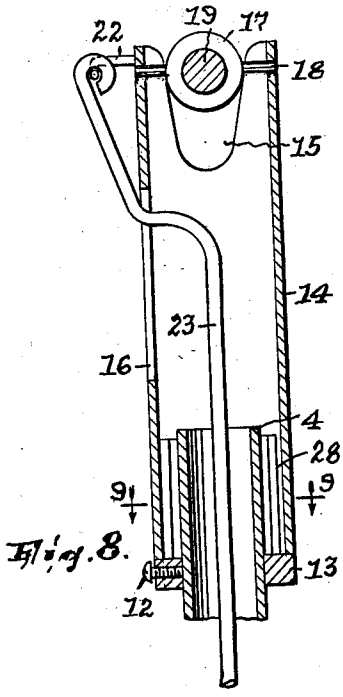

Fig. 8.

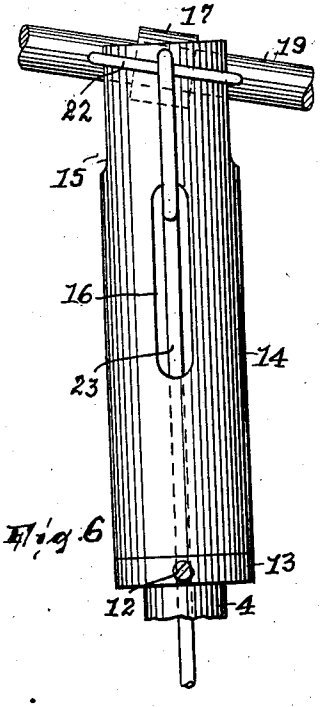

Fig. 6

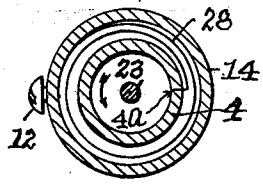

Fig. 9.

INVENTORS,
Stephen R. Gerbino and
Daniel E. Whitney,
BY
John W. Stewart,
ATTORNEY

Patented July 1, 1947

2,423,380

UNITED STATES PATENT OFFICE

2,423,380

TOY AIRPLANE EQUIPMENT

Stephen R. Gerbino, East Paterson, and Daniel E. Whitney, Hawthorne, N. J.

Application April 19, 1946, Serial No. 663,342

7 Claims. (Cl. 272—31)

1

This invention contemplates an equipment or apparatus to be adapted for use as a toy or other pleasure purpose and is characterized by some medium, as one simulating an airplane, which when the apparatus is operating is made to soar.

According to our invention in one respect thereof, given a support, there is a rotary train of parts journaled therein and including a driving member and a standard which latter, as per the example herein set forth, reaches upwardly from the support but is in any event upright and is rotative in the support around its own axis and has, remote from the support, an arm projecting laterally and including, remote from said axis, a soaring device, and said train also includes slip-friction rotation-transmitting means interposed between the portions of the train which respectively include said member and the arm. The said slip-friction means is present so that with the driving member of the train subject to quick starting, as by resort to an electric motor, the take-off of the soaring device may be effected at desirably gradually increasing speed.

In another aspect of our invention, what we have referred to as an upright standard having the said arm including a soaring device is specifically constituted as follows: There is an upright staff journaled in the support on an upright axis and journaled in such staff on an axis crossing such upright axis is a carrier; a shaft is journaled in the carrier and projects laterally from the first-named axis and is rotative around its own axis; and the soaring device takes the form of stiff vane-like element (as an airplane) fast to the shaft remote from the staff. When the structure including these parts is rotated, as by effort applied to the staff, said element rotates around the axis of rotation of the staff. Supplementing the system as thus indicated is means to oscillate the shaft around its own axis and in the carrier. On the whole, therefore, by manipulating said means, and hence changing the angle of said element, the latter in its rotation around the staff may be caused to rise, descend or continue horizontally in flight. The said means is preferably so located as to be hidden so as to impart the illusion that the plane or equivalent is operating voluntarily.

In the drawings,

Fig. 1 is a side elevation of the equipment mounted on a platform or table, shown in section, which may serve as the "flying-field";

Figs. 2 and 3 are, respectively, a side elevation and plan of the plane and its supporting arm;

2

Fig. 4 shows the lower part of the equipment in side elevation, except for the housing therefor and the platform, which appear in section;

Fig. 5 is a fragmentary underneath plan of what is shown in Fig. 4;

Fig. 6 shows on a larger scale a fragment of the upper part of said equipment, viewed the same as in Fig. 1;

Fig. 7 is a plan view of what is seen in Fig. 6;

Fig. 8 is a sectional view of what is seen in Figs. 6 and 7 taken in a vertical plane cutting the slot 16; and

Fig. 9 is a sectional view on line 9—9, Fig. 8.

Let 1 be a housing, here open at the bottom and having brackets 2 by which it may be supported in an opening of and on a platform or table 3 which may serve as a "flying field."

A tubular upright (here vertical) section or column 4 penetrates the top wall 1a of the housing, being supported therein by a collar 5 held to the column by a set-screw 6, and at its lower end the column has fast thereto a worm-gear 7 separated from said top wall by a bushing 8. The unit formed by parts 4 and 7 is to be rotated by a driving member herein the form of a worm 11 on the driven shaft of an electric motor 9 having the usual electric conductor 10 provided with any means (not shown) for establishing or interrupting the current. The body of the motor in which the worm is journaled is fixed to the housing and forms therewith what we term a support. Near its upper end the column has, secured thereto by a screw 12, a collar 13 and on the collar, in telescoped relation to the column, seats another tubular section or column 14 whose upper end is forked by presence of opposite notches 15—said column also having the upright slot 16 whose purpose will be hereinafter set forth. At 17 is a cylindrical carrier having opposite trunnions 18 journaled in the upper end of column 14 with their common axis crossing (being here horizontal) the upright axis of the two columns. Penetrating the carrier is a shaft 19 which at one side of the carrier has a balance weight 20 and at the other side carries a soaring device 21 here in the form of an airplane.

What we have hereinbefore designated the "driving member" is the worm 11; the "standard" comprises in this example the unit 4—7, the column 14 and carrier 17, which latter supports the shaft 19 affording the mentioned "arm," with the plane 21 as the "soaring device."

As indicated, when the motor is started, usually suddenly initiating rotation of the driving member, the take-off of said device is desirably

to be effected at gradually increasing speed. Hence in what we have termed the "rotary train," here including the driving member and standard, is included a slip-friction rotation-transmitting means, here taking the form of a spiral spring 28 coiled around the axis of the standard and interposed between the telescoped portions of the columns or sections 4 and 14, it having its inner end bent and projecting into a slit 4a of column 4 and its other end in wiping contact with column 14. This spring is preferably coiled in the same direction as that of rotation of column 4, which latter in the present instance is as per the arrow in Fig. 9; thereby the spring obtains an effective but sliding grip on the column 14.

Now, shaft 19 is journaled in the carrier 17 so as to rotate around its own axis therein and straddling the column 14 it has a generally U-shaped crank 22 affixed to and lying in a plane extending lengthwise of the shaft. The soaring device, here an airplane, is at least for the purpose now to be indicated, fixed to the shaft. Loosely connected to the crank is a link 23 which, having been entered to column 14 via its slot 16, extends downwardly through that portion of the standard which we term a "staff," to wit, including the unit 4—7 and column 14, the lower end of the link reaching below the staff and formed with a peripherally grooved head 24. Straddling this head and engaged in its groove is the forked end of a bell-crank lever 25 fulcrumed on a rod 26 supported by the housing 1, and connected to the link is a thrust-handle 27 protruding from and guided by a wall of the housing.

With regard to the operation of the apparatus as now to be described and involving the journaling of shaft 19 in the carrier and the means comprising the link 23, lever 25 and handle 27, we term the soaring device (which is in this instance to be fast to the shaft, as indicated) a "stiff vane-like element," its wings 21a together forming a stiff vane lying in a plane penetrated by the staff. The staff being rotated and with it the carrier and hence the unit formed by said shaft and element, air pressure active on said unit (specifically, said element), according to the angular position thereof, will determine whether the flight is to be horizontal or at a downward or upward incline, the pivoting of the carrier permitting it and hence said unit to be canted in either direction. This is a matter of control by the operator, i. e., by movement of handle 27 inward or outward, the lever displacing the link (free thereof to rotate with the staff and its load) so that it in turn turns said unit around the axis of its shaft.

It will be apparent that in so far as presence of the slip-friction rotation-transmission means is concerned it is not material what form the soaring device takes or whether the arm of the standard is susceptible of being canted or rotative around its own axis, and that in so far as is concerned the controlled rise or descent of the vane-like element during soaring it is not material that such slip-friction rotation-transmitting means be present.

Having thus fully described our invention what we claim is:

1. In combination, a support and a rotary train of parts journaled therein and including a driving member and an upright standard projecting from the support and rotative therein around its own axis and having, remote from the support, an arm projecting laterally from the standard and including, remote from said axis, a soaring device, said train also including slip-friction rotation-transmitting means interposed between the portions of the train which respectively include said member and the arm.

2. The combination set forth in claim 1 characterized by the portion of the standard which includes said arm being rotative around said axis independently of the remaining portion of the standard and by said means being interposed between such portions.

3. The combination set forth in claim 1 characterized by said portions respectively having parts thereof rotative around a common upright axis and in telescoped spaced relation to each other and by said means consisting of a spiral spring interposed in the space between said parts and coiled around the latter axis.

4. The combination set forth in claim 1 characterized by said portions respectively having parts thereof rotative around a common upright axis and in telescoped spaced relation to each other and by said means consisting of a spiral spring interposed in the space between said parts and coiled around the latter axis in the same direction as that of rotation of the train.

5. In combination, a support, a rotary upright staff journaled therein on an upright axis, a carrier journaled in the staff on an axis crossing the first-named axis, a shaft journaled in the carrier and projecting laterally from said first-named axis and rotative around its own axis, a stiff vane-like element fast to the shaft remote from the staff, and upright means, rotative with the staff, for oscillating the shaft around its own axis.

6. The combination set forth in claim 5 characterized by said means extending through the staff.

7. In combination, a support, a driving member journaled in the support, a rotary upright staff projecting from the support and including a section remote from the support and a section adjacent and journaled in the support and geared with said member, slip-friction means for transmitting rotation from the second-named to the first-named section around the axis of the former, a carrier journaled in the first-named section on an axis crossing the first-named axis, a shaft journaled in the carrier and projecting laterally from said staff and rotative around its own axis, a stiff vane-like element fixed to the shaft remote from the staff, and upright means, rotative with the staff, for oscillating the shaft around its own axis.

STEPHEN R. GERBINO.
DANIEL E. WHITNEY.