(12) CERTIFIED INNOVATION PATENT (11) Application No. **AU 2010101028 B4**
(19) AUSTRALIAN PATENT OFFICE

(54) Title
An energy saving sensor apparatus

(51) International Patent Classification(s)
H05B 37/02 (2006.01)

(21) Application No: **2010101028** (22) Date of Filing: **2010.09.02**

(30) Priority Data

(31) Number	(32) Date	(33) Country
2009904167	**2009.09.02**	**AU**

(45) Publication Date: **2010.10.21**
(45) Publication Journal Date: **2010.10.21**
(45) Granted Journal Date: **2010.10.21**
(45) Certified Journal Date: **2011.03.31**

(71) Applicant(s)
Mort Bay Traders Pty Ltd

(72) Inventor(s)
Grigg, Simon

(74) Agent / Attorney
FB Rice & Co, Level 23 200 Queen Street, Melbourne, VIC, 3000

(56) Related Art
US 7122976 B1
US 5406173 A
GB 2309516 A
US 5789869 A
GB 2425225 A

2010101028 02 Sep 2010

ABSTRACT

An energy saving sensor apparatus is provided and comprises a first unit and a second remote unit. The first unit includes a housing, a load control means for controlling electrical power to be supplied to a load which is releaseably connectable to said first unit, and a wireless receiver operable to receive a wireless light sensor signal from a remote unit. The second remote unit includes a housing and a light sensing unit located at least partially within said housing and operable to wirelessly transmit a light sensor signal to said first unit based on the ambient light level. The load control means is responsive to the received wireless light sensor signal and is operable to: selectively supply the load with electrical power when the light sensing unit senses a level of ambient light that exceeds a first predetermined level and to discontinue the supply of electrical power when the ambient light sensing unit senses a level of ambient light that exceeds a second predetermined level.

2010101028 02 Sep 2010

AUSTRALIA

FB RICE & CO
Patent and Trade Mark Attorneys

Patents Act 1990

MORT BAY TRADERS PTY LTD

COMPLETE SPECIFICATION
INNOVATION PATENT

Invention Title:

An energy saving sensor apparatus

The following statement is a full description of this invention including the best method of performing it known to us:-

2010101028 02 Sep 2010

Cross-Reference to Related Applications

The present application claims priority from AU2009904167 the content of which is incorporated herein by reference.

Field of the Invention

The present invention relates to an energy saving sensor apparatus. In particular it relates to an apparatus for reducing the power consumption of one or more electric devices when such devices are not being used.

Background

Remote controls for electronic devices typically, are small wireless handheld objects with an array of buttons for adjusting various settings such as switching the product on and off. The remote controller may use a near infrared diode to emit a beam of light that is picked up by one or more sensors on the electronic device, thereby requiring of sight to operate the receiving device. To overcome this problem, infrared extenders can be utilised, but at an increased cost. Moreover, for an electronic device to be turned on by a wireless remote control, the device must always be partly on, thereby consuming standby power.

On average, Australians have one of the largest carbon footprints in the world. Government campaigns have focused on educating its residents on ways that individuals can reduce their carbon footprint, whether in the household or the workplace. One campaign has focused on the fact that standby power uses unnecessary energy, which means more greenhouse gases and more money spent on a consumer's power bill. A standard home entertainment set up having a TV, set top box, Blue-ray and audio and system consumes on average AU$500 of standby power per year.

Summary

An energy saving sensor apparatus is provided comprising:

a first unit including:

a housing;

a load control means for controlling electrical power to be supplied to a load which is releaseably connectable to said first unit; and

a wireless receiver operable to receive a wireless light sensor signal from a remote unit; and

a second remote unit including:

2010101028 02 Sep 2010

a housing;

a light sensing unit located at least partially within said housing and operable to wirelessly transmit a light sensor signal to said first unit based on the ambient light level;

wherein the load control means is responsive to the received wireless light sensor signal and is operable to: selectively supply the load with electrical power when the light sensing unit senses a level of ambient light that exceeds a first predetermined level and to discontinue the supply of electrical power when the ambient light sensing unit senses a level of ambient light that exceeds a second predetermined level.

The first unit may further include a radio frequency receiver operable to receive a transmitted radio frequency signal indicative of a user selected channel, wherein the load control means selectively controls electrical power to be supplied to the load which corresponds to the user selected channel.

The second remote unit may further include a radio frequency transmitter operable to transmit radio frequency signals to said load control means indicative of a user selected channel.

The ambient light sensing unit may comprise a light sensor and a wireless transmitter in communication with the light sensor. The light sensor may comprise an LED, a photodiode, a cadmium sulfide photocell, a light dependent resistor, a photovoltaic cell, a phototransistor, or the like. The light sensing unit may further comprise ambient light sensing circuitry.

The energy saving sensor apparatus may further comprise a light sensitivity control operable to increase or decrease the light sensor's sensitivity to detected light. Such a feature may be useful for instance during the transition between seasons.

The first predetermined level may be representative of the level of ambient light at or around dawn whilst the second predetermined level may be representative of the level of ambient light at or around dusk. The light sensing unit may take two or more measurements over a period of time to ascertain whether the level of ambient light is increasing or decreasing.

2010101028 02 Sep 2010

An energy saving sensor device is provided comprising:

a housing;

an ambient light sensing unit located at least partially within said housing; and

a load control means for controlling electrical power to be supplied to a load which is releaseably connectable to the energy saving sensor device, wherein the load control means is automatically responsive to the ambient light sensing unit and is operable to: supply the load with electrical power when the ambient light sensing unit senses a level of ambient light that exceeds a first predetermined level and to discontinue the supply of electrical power when the ambient light sensing unit senses a level of ambient light that exceeds a second predetermined level.

The energy saving sensor device or apparatus may further comprise a power indicator.

The load control means of either the energy saving sensor device or apparatus may comprise a controller in the form of a microprocessor, or similar.

The first and second predetermined levels may be representative of any times of the day for instance at or around dawn and dusk respectively.

The load control of either the energy saving sensor device or apparatus means may include a mode selector to enable a user to select a mode of operation. In a preferred embodiment the first predetermined level may be representative of the level of ambient light at or around dawn whilst the second predetermined level may be representative of the level of ambient light at or around dusk. Such an embodiment has the advantage of automatically disconnecting the power supplied to the load, i.e supplied to all of the electrical appliances connected to the energy saving sensor device or apparatus. Thus when used in a typical 9 to 5 office working environment, the user can simply leave the office without turning off all of the appliances and return in the morning and resume work without having to switch said appliances back on.

The load control means of either the energy saving sensor device or apparatus may further comprise an override means for manually inhibiting and overriding a selected operating mode of the energy saving sensor device.

The energy saving sensor device or apparatus may further comprise a switch capable of selecting one of the operating modes of the device.

2010101028 02 Sep 2010

The remote control unit may be battery powered. The remote control unit may comprise a battery low level indicator. The load control means may comprise an override means for manually inhibiting and overriding a selected operating mode of the energy saving sensor device and/or a controller.

A power indicator and or a load indicator to indicate the on/off state for the load may be located at least partially within the housing of the remote control unit.

A switch capable of selecting one of the operating modes of the device may be located at least partially within the housing of the remote control unit.

Brief Description of the Figures

Figure 1 depicts a perspective view of an embodiment of the energy saving power socket according to an aspect of the invention;

Figure 2 depicts a side view of the energy saving power socket shown in figure 1;

Figure 3 depicts a front view of an embodiment of the energy saving power socket according to a further aspect of the invention;

Figure 4 depicts a perspective view of the energy saving power socket shown in figure 3;

Figure 5 depicts a front view of a control unit for the energy saving power socket shown in figures 3 and 4 situated within a mounting bracket;

Figure 6 depicts a rear view of the control unit shown in figure 5.

Detailed Description

A first embodiment of the energy saving sensor device in the form of a power socket is illustrated in figures 1 and 2. The energy saving power socket 10 includes a housing 12 in which slots or holes 14 are provided which accept and deliver current to prongs of an inserted plug. Additional openings in the housing 12 are provided for a power indicator 16, a light sensor 18, a light sensor sensitivity control 20, a load control means 22, a load ("on"/"off") indicator 24 and a manual override button 26. The power indicator 16 indicates whether the energy saving power socket is drawing current.

The load control means 22 enables a user to select a first or a second mode of operation. For instance, in a first mode of operation, a first predetermined level may be representative of the level of ambient light at or around dawn whilst a second

2010101028 02 Sep 2010

predetermined level may be representative of the level of ambient light at or around dusk, whilst in a second mode of operation the first predetermined level may be representative of the level of ambient light at or around dusk whilst the second predetermined level may be representative of the level of ambient light at or around dawn.

The rear of the power socket is provided with three wired contacts 28 (of which only two are shown), although it should be appreciated that other configurations together with the appropriate circuitry are possible depending on the country of use. The contacts are composed of steel and are plated with zinc or nickel.

The light sensor 18, in the form of a light emitting diode, detects changes in lighting condition and responds according to the state of the load controller. The light sensor sensitivity control 20 operates to increase or decrease the light sensors sensitivity to detected light and therefore lengthen or shorten the period for which a device is loaded.

In the first mode, the load control means 22 automatically turns a load on once the light sensor senses a minimum level of ambient light (i.e. representative of dawn), and operates to hold the load on as long as the light sensor continues to detect a sufficient level of light. After the detected light falls below a predetermined level (i.e. representative of dusk) current supplied to the device or devices which are bound to the energy savings power socket is automatically disconnected. Electric power which would otherwise be consumed by such devices in a stand-by mode is reduced or substantially eliminated.

Conversely in the second mode, the load control means 22 operates such that if adequate ambient light is present, the sensor holds the load OFF until light levels drop to below the predetermined level.

Users can override either mode by pressing the manual override button 26.

Figures 3 to 6 illustrate a further aspect of the energy saving sensor device in the form of a power socket together with a remote controller. With specific reference to figure 3, the energy saving apparatus comprises a first unit in the form of a power socket 30 which includes a housing 32 in which slots or holes 31 are provided which accept and deliver current to prongs of an inserted plug. Additional openings in the housing 32 are

provided for a load control means 34, a power indicator 36, a load ("on"/"off") indicator 38 and a manual override button 40. The load control means 34 controls whether or not electrical power is supplied to a load and is able to be selectively operated in either a first or second mode. In a first mode of operation for instance, a first predetermined level may be representative of the level of ambient light at or around dawn whilst a second predetermined level may be representative of the level of ambient light at or around dusk. In a second mode of operation, the first predetermined level may be representative of the level of ambient light at or around dusk whilst the second predetermined level may be representative of the level of ambient light at or around dawn. A wireless receiver (not shown) is provided and is operable to receive a wireless signal from a remote unit.

Figure 4 depicts the rear of the rear side of the energy saving power socket 30 showing a sliding panel in an open position to expose a radio frequency (RF) channel select 42.

The energy savings device can be programmed to select up to eight different channels, via the RF channel select 42 to enable control of up to eight different devices in electrical connection with the energy saving power socket 30 by way of a power board. It should be appreciated that the invention is not limited in any way to the number of channels and modifications may be appropriately made to accommodate fewer or more than eight channels.

Figure 5 and 6 depict the front a rear views of a second remote unit of the energy saving sensor device in the form of a remote controller 44. The remote controller 44 also comprises a housing 46. Openings are provided in the front of the housing 46 for a light sensor unit 48, a battery low level indicator 50, and a light sensor sensitivity control 52. The light sensor unit 48 includes a light sensor which is this embodiment is a cadmium sulfide (CDS) photocell and a wireless transmitter in communication with the ambient sensor. The light sensor sensitivity control 52 is screw operated to enable a user to increase or decrease the light sensor's sensitivity to detected light and therefore lengthen or shorten the period for which a device is loaded. The wireless transmitter may be a small, low power radio frequency transmitter such as transmitters used in wireless consumer products such as garage door openers and radio-controlled toys. Such transmitters may operate in the 300 MHz band, have a range up to about 40m and typically do not require an external antenna, although one could be provided if necessary.

2010101028 02 Sep 2010

The rear of the housing is provided with a sliding back 54 to enable access to the interior of the housing where batteries are located to power the remote controller 44. Opening the sliding back further provides access to an RF channel select 56. In use, the selection of the RF channel select is set to correspond to the RF channel select 42 on the energy savings device 30. The RF transmitter transmits a signal that corresponds to a binary command for the channel selected. A radio frequency receiver 39 on the first unit receives the transmitted RF signal. The load controller 34 is further responsive to the radio frequency receiver 39 to selectively control the specific load which corresponds to the selected channel. The RF channel select 56 may have micro-switches which are matched to the frequency of the sockets.

A wall mount 58 is provided to enable mounting of the remote control to a wall or surface.

It will be appreciated by persons skilled in the art that numerous variations and/or modifications may be made to the invention as shown in the specific embodiments without departing from the scope of the invention as broadly described. Whilst the second embodiment above has been described with reference to an eight channel select it should be appreciated that the invention is not limited to selection of any particular number of channels. The present embodiments are, therefore, to be considered in all respects as illustrative and not restrictive.

2010101028 02 Sep 2010

THE CLAIMS DEFINING THE INVENTION ARE AS FOLLOWS:

1. An energy saving sensor apparatus comprising:

a first unit including:

a housing;

a load control means for controlling electrical power to be supplied to a load which is releaseably connectable to said first unit; and

a wireless receiver operable to receive a wireless light sensor signal from a remote unit; and

a second remote unit including:

a housing;

a light sensing unit located at least partially within said housing and operable to wirelessly transmit a light sensor signal to said first unit based on the ambient light level;

wherein the load control means is responsive to the received wireless light sensor signal and is operable to: selectively supply the load with electrical power when the light sensing unit senses a level of ambient light that exceeds a first predetermined level and to discontinue the supply of electrical power when the ambient light sensing unit senses a level of ambient light that exceeds a second predetermined level.

2. The energy saving sensor apparatus according to claim 1, wherein the first unit further includes a radio frequency receiver operable to receive a transmitted radio frequency signal indicative of a user selected channel, and wherein the load control means selectively controls electrical power to be supplied to the load which corresponds to the user selected channel.

3. The energy saving sensor apparatus according to claim 2, wherein the second remote unit further includes a radio frequency transmitter operable to transmit a radio frequency signal to said load control means indicative of a user selected channel.

4. The energy saving sensor apparatus according to any one of claims 1 to 3, wherein the ambient light sensing unit comprises a light sensor and a wireless transmitter in communication with the light sensor.

2010101028 02 Sep 2010

5. The energy saving sensor apparatus according to claim 4, further comprising a light sensitivity control operable to increase or decrease the light sensor's sensitivity to detected light.

2010101028 02 Sep 2010

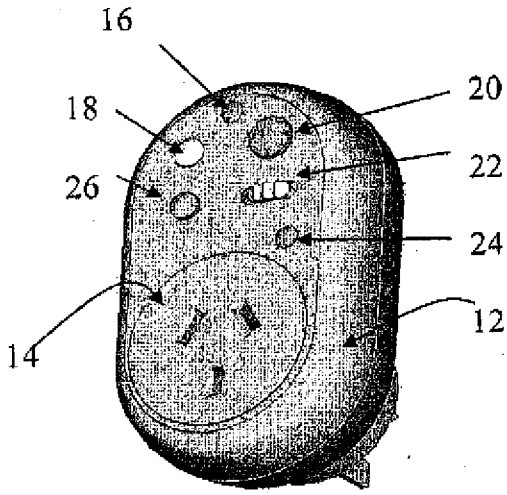

Fig. 1

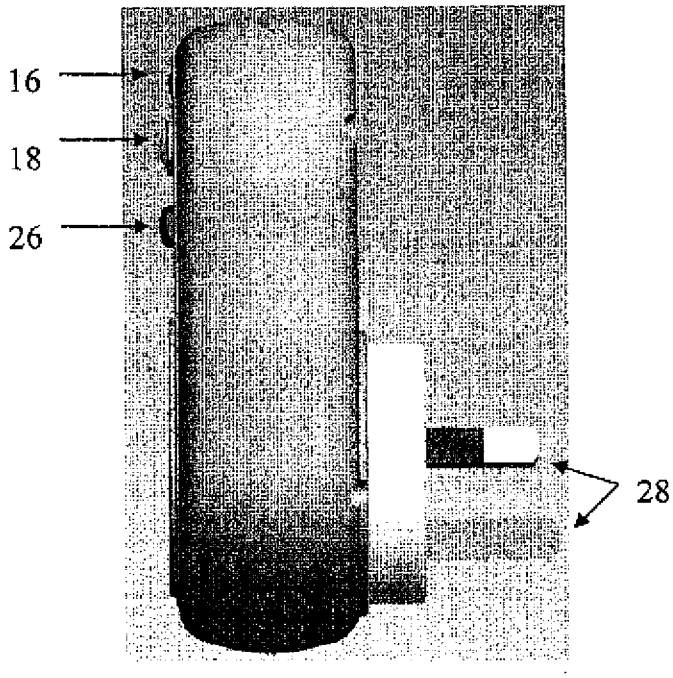

Fig. 2

2010101028 02 Sep 2010

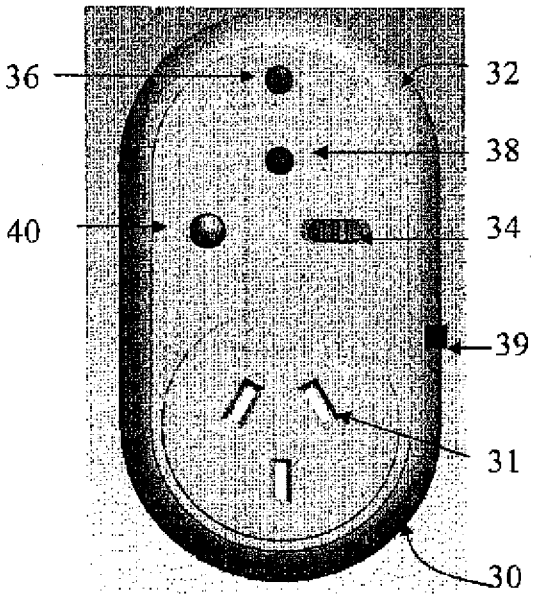

Fig. 3

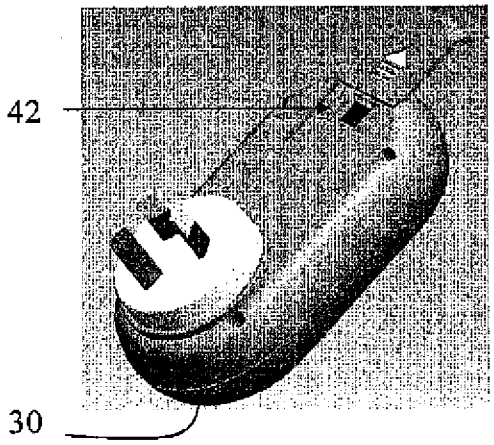

Fig. 4

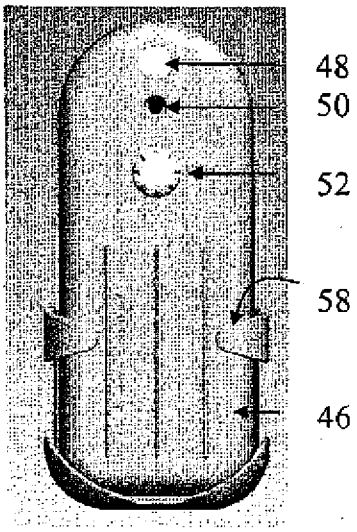

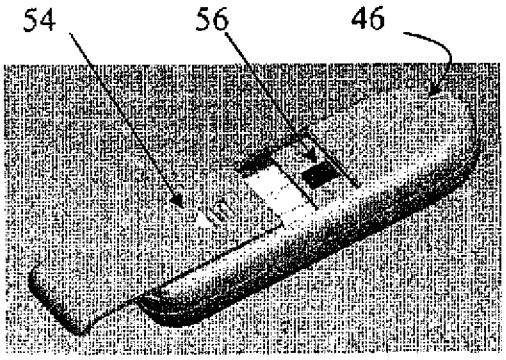

Fig. 6

Fig. 5