W. A ATWOOD.

CIRCUIT INTERRUPTER.

APPLICATION FILED JUNE 14, 1915.

1,261,677.

Patented Apr. 2, 1918.

Fig.1.

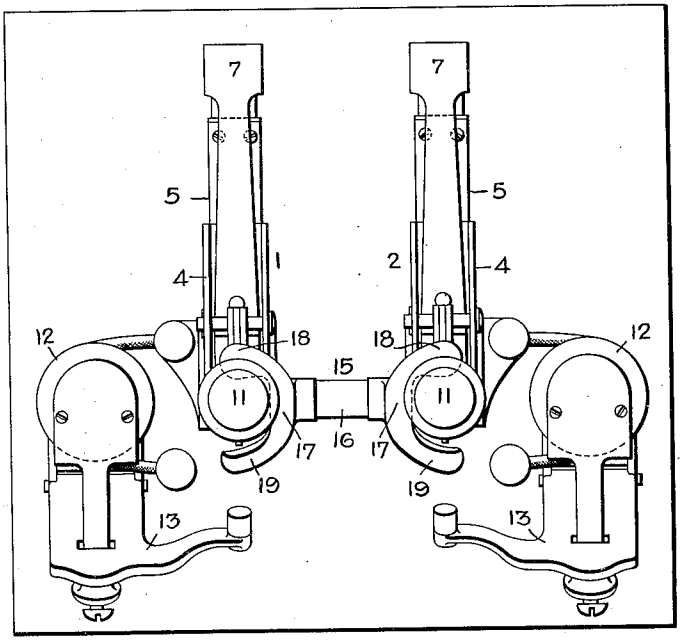

Fig.2.

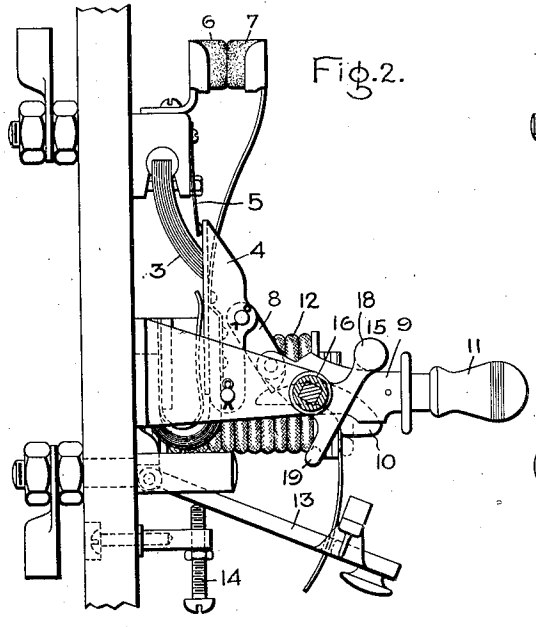

Fig.3.

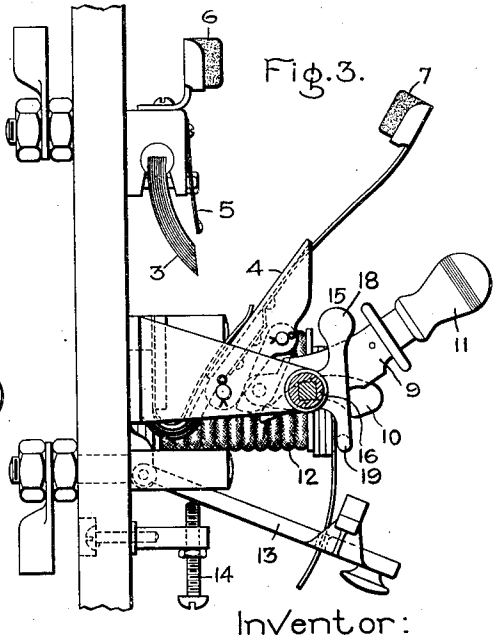

Inventor:
Winfield A. Atwood.
by Albert G. Davis
His Attorney.

UNITED STATES PATENT OFFICE.

WINFIELD A. ATWOOD, OF SCHENECTADY, NEW YORK, ASSIGNOR TO GENERAL ELECTRIC COMPANY, A CORPORATION OF NEW YORK.

CIRCUIT-INTERRUPTER.

1,261,677. Specification of Letters Patent. Patented Apr. 2, 1918.

Application filed June 14, 1915. Serial No. 33,895.

To all whom it may concern:

Be it known that I, WINFIELD A. ATWOOD, a citizen of the United States, residing at Schenectady, county of Schenectady, State of New York, have invented certain new and useful Improvements in Circuit-Interrupters, of which the following is a specification.

My invention relates to circuit controllers, such as circuit breakers and more particularly to circuit breakers comprising a plurality of movable members interconnected by an interlocking device.

The object of my invention is in general to improve the operation of circuit breakers of this type and especially to provide a novel and improved type of interlock which is exceedingly cheap, durable, and has a minimum number of parts.

The novel features which I believe to be characteristic of my invention will be definitely indicated in the claims appended hereto; the features of construction and mode of operation will be understood by reference to the following description taken in connection with the accompanying drawings which show the preferred embodiments of my invention and in which—

Figure 1 shows a front elevation of a circuit controller embodying the novel features of my invention and Figs. 2 and 3 are end elevations of the controller shown in closed and open positions respectively.

For purpose of illustration, I have shown my novel type of interlock between two automatic circuit breakers 1 and 2, each comprising the usual fixed and movable contacts 3 and 4, auxiliary contacts 5 and shunt contacts 6 and 7, the contacts being arranged to separate in the order named. The movable contact member 4 of each switch, is moved by a collapsible actuating toggle comprising the links 8 and operating lever 9, each toggle is normally underset, and is held in position to hold each circuit breaker closed, as shown in Fig. 2, by a latching member or restraining means 10, which cooperate with links 8. Attached to the operating lever 9 of each circuit breaker is a handle member 11, by means of which each toggle may be moved to close the circuit breaker. For tripping each switch automatically, I provide an electromagnet 12 having a coöperating pivotally mounted armature 13. The distance between each electromagnet and its coöperating armature may be regulated by an adjusting screw 14, in order to render each electromagnet operative only upon the occurrence of a current flow through its circuit breaker above a predetermined amount. Each armature 13 may be moved either by hand or by its electromagnet, until it strikes the end of its cooperating latching member 10 and swings the member into releasing position, thereby allowing the toggle 8—9 to collapse and the circuit breaker to open.

Coöperating with both circuit breakers 1 and 2, I provide my novel and improved interlocking device or member 15 which comprises a movable member, such as a rotatable shaft 16, pivotally mounted between the breakers and actuated by momentum acquired during opening movement of either breaker. In the particular arrangement shown the shaft 16 has at each end thereof, bifurcated or U-shaped actuator arms 17, coöperating with and partially encircling each of the operating members or levers 9. The arms 17 are insulated from each other and are secured to the shaft 16 in any well known manner, so that the shaft and both arms move integrally to form a unitary moving member. Each bifurcated arm has an upper actuating portion 18 extending into the path of opening movement of each operating member 9, and a lower tripping portion 19, movable simultaneously into tripping engagement with each latching or restraining member 10.

As best shown in Fig. 2, the actuating portion 18 of each arm is weighted so as to overbalance the tripping portion 19 and hold the actuating portion 18 of each arm in engagement with the levers 9 of each circuit breaker, when the breakers are in closed position, thereby holding the tripping portions 19 of the arms 17 normally biased to normal position and out of tripping position. When either one of the latching or restraining members 10 is moved into releasing position, its corresponding toggle 8—9 collapses, raising the lever 9 and handle 11 of its circuit breaker quickly upward into circuit opening position as shown in Fig. 3. The lever 9 in quickly rising, moves or pushes the weighted portion 18 of its coöperating actuator arm so that the arm moves, due to its inertia, ahead of the lever 9 into tripping position, As both actuator arms are mov-

able simultaneously by the shaft 16, the movement of one weighted portion 18 in response to the tripping of its circuit breaker, moves the weighted portion of both arms simultaneously. Due to the inertia and the weight of portions 18, the interlock moves quickly and independently of the lever 9 of the tripped circuit breaker, into tripping engagement with the respective latching members 10 with a hammer blow action. The interlock is therefore actuated in response to the movement of its actuator arm corresponding to the tripped breaker to move its actuator arm corresponding to the closed breaker simultaneously into tripping engagement with the latching means of the closed breaker whereby both circuit breakers are practically simultaneously tripped open.

After moving into tripping position the interlock falls back or returns automatically, due to the weight of its actuating portions 18, from tripping positions into an intermediate position where the actuating portions again engage the levers 9 which are now raised into circuit opening position. The actuating portions of the interlock in falling back or returning to their intermediate position, automatically move the tripping portions back and out of engagement with the latching members 10, so that the circuit breakers can be independently moved into circuit closing position free from the tripping portions 19 of the interlock.

In independently closing the circuit breakers, lever 9 of the first circuit breaker closed, moves free from the interlock, as the interlock is still held in intermediate position by the engagement of its weighted portions with the operating lever 9 of the still opened circuit breaker. As the operating lever of the last circuit breaker is moved to circuit closing position the actuator arms are released and are free to return the interlock, due to the weight of portions 18, to normal position without tripping the corresponding latching member 10 of the already closed breaker.

Although I have described a specific application of my invention, it will be apparent to those skilled in the art that the novel features of my interlocking device may be applied to any number of circuit breakers whereby the opening of any circuit breaker causes its operating lever, due to its opening movement, to move an interlocking member into one position to trip the latching members of any or all the breakers and then automatically fall back free from the latching members into an intermediate position in which position the interlock is held until the last circuit breaker closes whereupon the interlock returns independently to normal position without tripping the already closed breakers.

My invention may be embodied in other forms than that shown and described and I, therefore, do not wish to be restricted to the precise construction shown, but intend to cover by the appended claims all changes and modifications which are within the scope of my invention and will be apparent to those skilled in the art.

What I claim as new and desire to secure by Letters Patent of the United States, is:

1. The combination with a plurality of independent circuit breakers adapted to be automatically tripped, of means for tripping all said circuit breakers simultaneously, actuating means for moving said tripping means into tripping position in response to the opening movement of any of said circuit breakers and biased to return said tripping means automatically from tripping position to an intermediate non-tripping position in which position said actuating means is held until the last circuit breaker is closed.

2. The combination with a plurality of independent circuit breakers adapted to be automatically tripped, of means for tripping all said circuit breakers simultaneously, actuating means for moving said tripping means into tripping position in response to the opening movement of any of said circuit breakers and biased to return said tripping means automatically from tripping position to an intermediate position whereby said circuit breakers can be independently closed, said actuating means acting to return said tripping means automatically to normal position upon the closing of the last circuit breaker.

3. The combination with a plurality of circuit breakers having separate operating members, separate restraining means for holding said operating members in circuit closing position, and separate releasing means for said restraining means, of means movable into position to simultaneously trip the releasing means of all said circuit breakers in response to the movement of any of said operating members to switch opening position, said means having sufficient inertia to be moved ahead of said operating member into tripping position with a hammer blow action, said means being biased to immediately return from tripping position to an intermediate position and then from intermediate position to normal position with the movement of the last operating member to circuit closing position.

4. The combination with a plurality of circuit breakers having separate operating members, separate restraining means for holding said operating members in circuit closing position, and separate releasing means for said restraining means, of an interlock having a normal position in engagement with said operating members when in circuit closing position, a tripping position, and

a position intermediate said normal and tripping positions determined by the engagement with said operating members when in circuit opening position, said interlock being movable from normal position into tripping position to trip all said circuit breakers in response to the opening movement of any of said circuit breakers and biased to immediately fall back from tripping to intermediate position to allow the independent closing of said circuit breakers free from said interlock, said interlock returning to normal position in response to the closing of the last circuit breaker.

5. The combination with a plurality of circuit breakers having separate operating members, separate restraining means for holding said operating members in circuit closing position, and separate releasing means for said restraining means, of an interlock biased to normal position in the path of opening movement of said operating members and movable into tripping position to simultaneously trip all said circuit breakers by the movement of any of said operating members to circuit opening position, said operating members in circuit opening position acting to keep said interlock in an intermediate position out of tripping relation with said breakers until the operating member of the last closed breaker is moved into circuit closing position whereby said circuit breakers can be independently closed and said interlock automatically returned to normal position.

6. The combination with a plurality of circuit breakers having separate operating members, separate restraining means for holding said operating members in circuit closing position, and separate releasing means for said restraining means, of an interlocking device for said circuit breakers having sufficient inertia to move into tripping engagement with all of said releasing means in response to the movement of any of said operating members into switch opening position, the weight of said interlock acting to automatically return said interlock from tripping position to an intermediate position in which position the interlock is held by said operating members until the last circuit breaker is closed whereupon said interlock returns independently to normal position free from the releasing members of the already closed breakers.

7. The combination with a plurality of circuit breakers having separate operating members, separate restraining means for holding said operating members in circuit closing position, and separate releasing means for said restraining means, of an interlock having a tripping portion for simultaneously engaging the releasing means of said circuit breakers, a weighted portion extending into the path of opening movement of said operating members for normally holding said interlock out of tripping position, the movement of any of said operating members to circuit closing position acting to move said interlock due to the inertia of its weighted portion ahead of said operating member into tripping position with a hammer blow action, said weighted portion operating to immediately return said interlock from tripping position to an intermediate position free from said releasing means whereby said circuit breakers may be independently closed free from said interlock, said interlock returning to normal position with the closing of the last circuit breaker.

8. The combination with a plurality of circuit breakers having separate operating members, separate restraining means for holding said operating members in circuit closing position, and separate releasing means for said restraining means, of an interlock having substantial inertia and biased to normal position, said interlock being movable due to its inertia and in response to the opening movement of any of said operating members into tripping position with a hammer blow action to simultaneously trip all said circuit breakers, said interlock returning from tripping position to an intermediate position determined by said operating members in circuit opening position, said interlock being held in said intermediate position until the movement of the last operating member to circuit closing position whereupon the interlock independently returns to normal position.

9. The combination with a plurality of circuit breakers, having separate operating members, separate restraining means for holding said operating members in circuit closing position, and separate releasing means for said restraining means, of an interlock for said circuit breakers having tripping portions simultaneously movable into tripping engagement with each of said releasing means, and actuating portions in the path of opening movement of each of said operating members for moving said interlock into tripping position upon the movement of any of said operating members to switch opening position, said actuating portions having sufficient inertia to carry said interlock into tripping position with a hammer blow action, the weight of said actuating portions acting to immediately return said interlock from tripping position to an intermediate position to move the tripping portions of said interlock free from said releasing means, said interlock being held in said intermediate position by the engagement of said actuating portions with said operating members until the last operating member is moved to switch closing position.

10. The combination with a plurality of circuit interrupters, having separate operat-

ing members, separate restraining means for holding said operating members in circuit closing position, and separate releasing means for said restraining means, of an interlock for causing the tripping of all said circuit breakers in the response to the opening of any circuit breaker and for allowing said breakers to be closed independently comprising a tripping portion and an actuating portion therefor operatively related to each circuit breaker, said actuating portions being simultaneously actuated in response to the movement of any of said operating members into circuit opening position to cause the simultaneous movement of all said tripping portions into tripping position, said actuating portion being weighted to provide sufficient inertia to carry said tripping portions into tripping position with a hammer blow action and return said actuating portions to an intermediate position to engage said operating levers in their circuit opening positions whereby said tripping portions are simultaneously moved free from said releasing means to enable the independent closing of said circuit breakers, said actuating portions returning said tripping portions to normal position with the closing of the last circuit breaker.

11. The combination with a plurality of circuit breakers, having separate operating members, separate restraining means for holding said operating members in circuit closing position, and separate releasing means for said restraining means, of an interlock for said circuit breakers comprising bifurcated arms operatively related to each breaker, said bifurcated arms having one portion movable into tripping engagement with each of said restraining means and another portion for actuating said arms and moving the tripping portions thereof into tripping position in response to the opening movement of said operating members and a member connecting said arms and rotatably mounted between said circuit breakers for moving both said arms simultaneously into tripping position in response to the movement of either breaker to circuit opening position.

12. The combination with two similar automatic circuit breakers mounted adjacent each other, of means responsive to the opening of one circuit breaker for simultaneously opening the other circuit breaker and for allowing said circuit breakers to be closed independently, said means comprising a member rotatably mounted between said breakers, a bifurcated arm secured to each end of said member and coöperating with each circuit breaker, said arms having one portion movable into tripping engagement with each of said circuit breakers, and another weighted portion for normally holding said first mentioned portion out of tripping position but movable in response to the opening of either of said circuit breakers, to cause said first mentioned portion of each arm to move into tripping position with a hammer blow action.

13. The combination with two circuit breakers mounted adjacent each other and having independent operating members, independent restraining means for holding said operating members in circuit closing position, and independent releasing means for said restraining means, of means responsive to the opening of one of said circuit breakers for simultaneously opening the other circuit breaker comprising, a member rotatably mounted between said circuit breakers, a bifurcated arm secured to each end of said member having a tripping portion and an actuating portion coöperating with each circuit breaker, the tripping portion of each arm being movable into tripping engagement with each releasing means by the movement of the actuating portion of either arm in response to the movement of either of said operating members to circuit opening position, the actuating portions of each arm being weighted to return both arms to normal position independent of the operating members when the last operated circuit breaker closes.

14. The combination with two automatic circuit breakers having independent operating members, independent restraining means for holding said members in circuit closing position, and independent releasing means for said restraining means, of a mechanical interlock for said circuit breakers comprising U-shaped arms partially encircling each of said operating members and having a lower tripping portion movable into tripping engagement with each of said restraining means and an upper actuating portion in the path of opening movement of said operating members, and a member rotatably mounted between said breakers and connecting said arms whereby the movement of either one of said operating members to circuit opening position causes the simultaneous movement of the arm corresponding to the other circuit breaker into tripping position.

15. The combination with two circuit breakers having separate operating members, separate restraining means for holding said operating members in circuit closing position and separate releasing means for said restraining means, of interlocking means actuated by the operating member of either circuit breaker for causing the simultaneous opening of both circuit breakers, said means comprising U-shaped rotatably mounted arms one for each circuit breaker having a portion extending below each operating member and movable into tripping engagement with each restraining means, and a portion extending above each operat-

ing member into the path of opening movement of said operating members, whereby said arms are moved into said tripping position in response to the movement of said operating members to circuit opening position, and a rotatably mounted member connecting said U-shaped arms and moving them simultaneously into tripping position in response to the movement of either operating member to circuit opening position.

16. The combination with two circuit breakers having separate operating members, separate restraining means for holding said operating members in circuit closing position, and separate releasing means for said restraining means, of an integral interlocking member rotatably mounted between said circuit breakers having a rotatable shaft, and U-shaped arms offset at each end of said member in position to be operated simultaneously in response to said operating members, one portion of said U-shaped arms extending into the path of opening movement of each operating member and the other portion movable thereby into tripping engagement with each restraining means, whereby the movement of one operating member into circuit opening position moves the U-shaped arm corresponding to the other circuit breaker into position to simultaneously trip said other circuit breaker.

17. An interlocking device for two independent automatically operated circuit breakers comprising a shaft rotatably mounted between said circuit breakers, a bifurcated arm secured at each end of said shaft in position to partially surround each operating member, said arms being simultaneously movable and each having a lower portion movable to trip each circuit breaker and an upper weighted portion for moving each arm into tripping position in response to the movement of either operating member to circuit opening position, the weight of said upper portion acting to normally hold the lower portion of each arm out of tripping position and acting to return said arms to normal position independent of said operating arms upon the closing of the last circuit breaker.

In witness whereof, I have hereunto set my hand this 12th day of June 1915.

WINFIELD A. ATWOOD.