United States Patent

[11] 3,522,815

[72] Inventor: **Charles J. Prange**
Lima, Ohio

[21] Application No.: **769,880**
[22] Filed: **Oct. 23, 1968**
[45] Patented: **Aug. 4, 1970**

[73] Assignee: **Rockwell Manufacturing Company**
Pittsburgh, Pennsylvania
a Corp. of Pennsylvania

[54] **HOSE GUIDE AND SUPPORT**
11 Claims, Drawing Figs.

[52] **U.S. Cl.** **134/167,** 15/104.3
[51] **Int. Cl.** **B08b 9/04**
[50] **Field of Search** 15/104.3, 104.38N, 246.5; 254/190; 134/166C, 167C

[56] **References Cited**
UNITED STATES PATENTS

3,165,109	1/1965	Hammelmann	134/167C
3,351,968	11/1967	Masters	15/104.3

Primary Examiner— Edward L. Roberts
Attorney—Strauch, Nolan, Neale, Nies and Kurz

ABSTRACT: A sewer conduit cleaning apparatus of the type wherein a hose is coiled on a rotatable reel in a truck comprises a manhole ring mounted for vertical, horizontal and rotative adjustments on the truck and incorporating a clamp structure where a guide member for the hose is releasably clamped during insertion of the nozzle end of the hose, and suitable lengths of rod are attached to the guide member to adjustably lower it into the conduit to be cleaned.

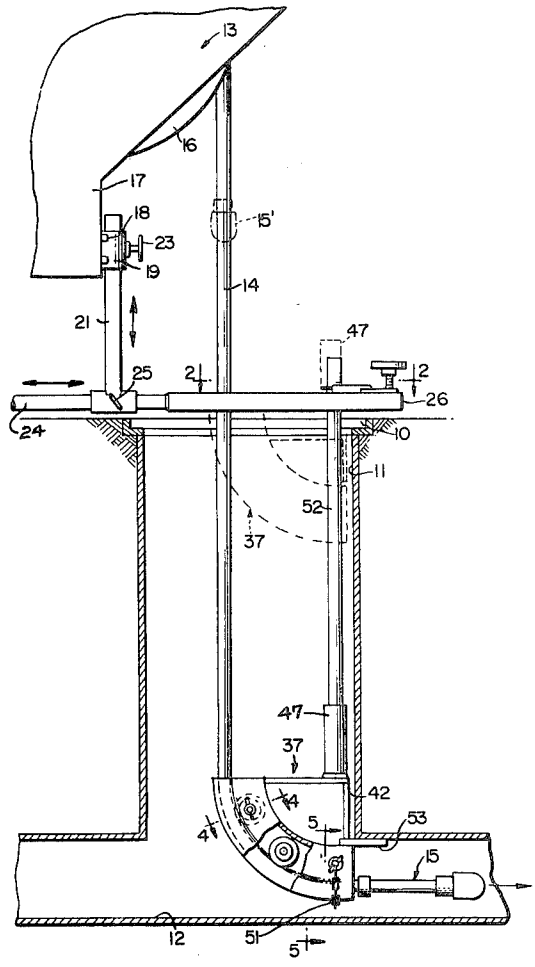

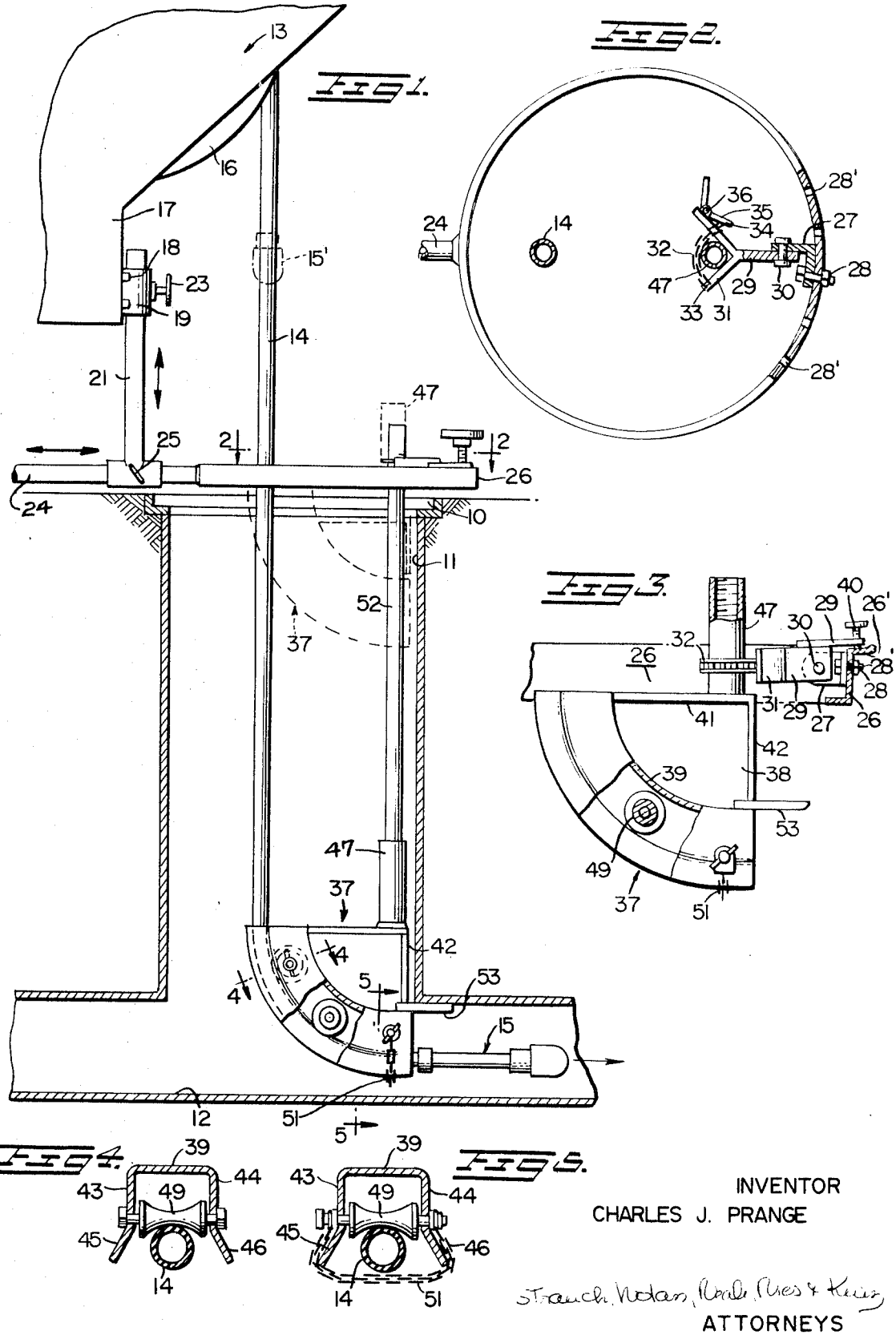

INVENTOR
CHARLES J. PRANGE

ATTORNEYS

U.S. PATENT 3,522,815

HOSE GUIDE AND SUPPORT

BACKGROUND AND SUMMARY OF INVENTION

The invention relates to sewer cleaning and like apparatus of the type wherein a nozzle of the self-propelling type at the end of a hose is introduced through a manhole opening into a sewer or like conduit to be cleaned. This type of apparatus is generally known as shown for example in Hammelmann Patent No. **3,165,109** and Goss **3,321,184**. The invention herein provides an efficient safe manner of guiding and lowering the hose nozzle into position and holding it there without the need of an operator entering the manhole passage.

Prior to the invention it was common practice to introduce the nozzle into a separate guide member on the end of a long shaft held by an operator, who would then lower the guide member through the opening until it was within the conduit, at which time the upper end of the shaft would be clamped to a manhole ring loosely laid across the top of the opening. Time consuming difficulties were encountered in assembling the hose with the guide member, and often pedestrians or workers would trip over the separate guide member or manhole ring lying on the pavement near the opening.

The present invention overcomes these and other difficulties in the prior art in that it provides for the speedy location of a manhole ring firmly held directly above the manhole opening and novel assembly of a hose guide member with the manhole ring, and this is the major object of the invention.

Other objects of the invention include the provision of a substantially universally adjustably mounted manhole ring arrangement together with novel structure for holding a guide member on the ring during the threading of the hose into it and lowering the guide member to final position within the conduit to be cleaned.

BRIEF DESCRIPTION OF DRAWINGS

FIGURE 1 is a side elevation partly fragmentary and partly sectioned showing apparatus according to a preferred embodiment of the invention;

FIGURE 2 is a fragmentary plan view showing details of the manhole ring;

FIGURE 3 is a fragmentary view partly in section showing the hose guide member mounting on the manhole ring.

FIGURE 4 is a section on line 4-4 of **FIGURE** 1; and

FIGURE 5 is a section on line 5-5 of **FIGURE** 1.

PREFERRED EMBODIMENTS

FIGURE 1 shows the invention as applied to a sewer or like conduit cleaning arrangement wherein a vertical passage **11** leads down from a manhole or like opening **10** to a generally horizontal underground sewer conduit **12**. A portable cleaning apparatus indicated at **13**, which is usually an assemblage of mechanism mounted on a motor truck, is positioned near the top of passage **11**. A flexible hose **14** having a special discharge nozzle **15** is coiled on a reel **16** that is rotatably mounted on a generally horizontal axis on the truck and usually several coiled layers of hose are accumulated on the reel.

The invention relates to special apparatus for properly lowering and positioning the nozzle **15** within conduit **12** without the necessity of a man entering the passage **11** and eliminating the chances of workers or passersby accidentally tripping over loose equipment.

In practice of the invention the truck is positioned with its rear end adjacent opening **10**, the usual manhole cover (not shown) having been removed.

A stationary apron **17** on the truck has secured thereto as by bolts **18** an open ended vertical mounting tube or sleeve **19** into which slidably extends a post **21** that has an open ended horizontal tube or sleeve **22** fixed on its lower end. Post **21** may be secured in different vertically adjusted positions as by set screw **23**.

A rod **24** is slidably adjustably mounted in tube **22**, the horizontally adjusted position thereof being secured as by a set screw **25**.

A guide member support preferably in the form of a relatively rigid metal manhole ring **26**, which preferably has an internal diameter about the diameter of opening **10**, is fixed on one end of rod **24** and extends generally horizontally over opening **10**. Set screws **23** and **25** are operated to effect the vertical and horizontal adjustments necessary to position ring **26** just above and in alignment with passage **11** as shown in **FIGURE** 1.

An inwardly projecting bracket **27** is rotatably mounted on ring **26** as by a pivot bolt **28**. Ring **26** is provided with a plurality of holes **28'** spaced around its circumference, one of which is selected suitably position bracket **27** approximately in location above the opening to sewer conduit **12**. The bracket **27** is not tightly secured to ring **26** but is free to rotate about the axis of bolt **28** for a purpose to be described. This axis is generally horizontal when ring **26** is positioned above opening **10**.

An inwardly extending arm **29** is pivoted on bracket **27** as by a pivot bolt **30** and rigidly carries at its free end a generally V-shaped jaw structure **31** that opens toward the other side of ring **26**. A flexible chain **32** is pivoted at one end at **33** on one side of the jaw and its other end is pivotally connected at **34** to a bell crank lever **35** pivoted at **36** on the other side of the jaw. The foregoing provides a quick opening and closing flexible clamp for a purpose to appear.

A plate **29'** fixed as by welding to the upper edge of arm **29** is provided with a threaded hole which receives a thumbscrew **40**. The position of the thumbscrew hole is so selected that the lower end of thumbscrew **40** will bear again an upper flange **26'** of ring **26** when arm **29** and plate **29'** are in a substantially horizontal position.

A hose retainer and guide member indicated at **37** in **FIGURE** 3 comprises a relatively rigid frame **38** having a continuously arcuate rear end and side wall **39**, a horizontal top wall **41** and a vertical front end wall **42**. As shown in **FIGURES** 4 and 5, wall **39** is generally U-shaped in cross section with parallel sides **43** and **44** extending outwardly and terminating in oppositely outwardly flaring lips **45** and **46**. Wall **39** thereby defines an outwardly open arcuately extending channel which, as shown in **FIGURES** 4 and 5, is bridged by a series of concave surfaced free rotatable rollers **49** effectively defining an arcuate roller track at the bottom of the channel.

Upstanding from the front end of top wall **41** is a short rigid mounting hollow post **47** having a socket formation at its upper end such as the threads indicated at **48**. At the start of an operation, with ring **26** in adjusted position over opening **10**, post **47** is initially disposed in the flexible clamp at jaw **31** and bell crank **35** rocked to tighten chain **32** around the post as shown in **FIGURES** 2 and 3 and thereby fixedly mount hose guide member **37** on the manhole ring **26** in the dotted line position indicated in **FIGURE** 1. At this time hose **14** is still on the reel with the nozzle hanging above the opening as shown in dotted lines at **15'** in **FIGURE** 1.

With post **47** secured to the manhole ring, the free end of the hose including nozzle **15** may be drawn down from reel **16** and inserted into the channel of the guide member **37**, passing over rollers **49** and emerging below wall **42**. A flexible retainer in the form of a relatively loose chain **51** secured across the lower open end of the channel keeps the hose from dropping down away from the guide member as shown in **FIGURES** 1 and 3.

At this point the free end of the hose is threaded within the guide member **37** which in turn is releasably clamped to ring **26** and located within opening **10**. Now the operator attaches one or more suitable lengths of rod **52** to post **47**, as by screwing into socket **48**, and releases chain **32** to allow the guide member **37** to drop away from the manhole ring. Descent of guide member **37** is controlled by the operator holding rod **52**.

At its forward end frame **37** is provided with a projecting lip **53**. In the event that the opening in sewer conduit **12** is not

directly beneath the bracket **27**, the frame **37** is moved a desired position by pivoting the rod **52**, jaw structure **31** and bracket **27** about the horizontal axis of bolt **28**. After frame **37** has entered the conduit, it is lifted by means of rod **52** to bring the projecting lip **53** and wall **42** of frame **37**, respectively, into contact with the upper surface of the conduit **12** and the side wall of manhole passage **11**, as shown in **FIGURE** 1. Chain **32** is then tightened around the upper part of rod **52**, and thumbscrew **40** may be turned to pivot the entire structure about bolt **30**.

Projecting lip **53** which extends some distance to the right of a vertical plate containing pivot bolt **30** (as shown in **FIGURE** 1) is thereby moved upward into tight engagement with the upper surface of conduit **12**, and the entire structure is rigidly secured between ring **26** and sewer conduit **12**. The hose can now be advanced, either manually or by application of fluid pressure, along the desired length of conduit **12**. Once the desired length of hose has been introduced into conduit **12**, the high pressure liquid can be discharged through the hose and the hose can be withdrawn over the rollers **49** while the high pressure liquid issuing forth from the nozzle flushes the sediment from the conduit back toward the manhole.

The invention may be embodied in other specific forms without departing from the spirit or essential characteristics thereof. The present embodiments are therefore to be considered in all respects as illustrative and not restrictive, the scope of the invention being indicated by the appended claims rather than by the foregoing description, and all changes which come within the meaning and range of equivalency of the claims are therefore intended to be embraced therein.

I claim:

1. In sewer cleaning or like apparatus of the type wherein a flexible hose is wound on a rotatable reel carried by a portable structure with the nozzle end of the hose available at the reel, a guide member support, means adjustably mounting said support on said structure for locating the support at optimum height and alignment with respect to a manhole opening at the top of a passage leading down to a conduit to be cleaned, means for fixing said adjustment, a guide member adapted to receive the nozzle end of said hose, means on said support for releasably clamping the guide member on the support while the hose is being introduced into the guide member, means for controllably lowering the guide member carrying the hose down through the passage to the conduit to be cleaned, and means for clamping the lowered guide member rigidly with respect to said support.

2. In apparatus as defined in claim **1**, said support being a relatively rigid manhole ring.

3. In apparatus as defined in claim **1**, said means adjustable mounting the support comprising a first member substantially vertically adjustably mounted on said structure, and a second member rigidly connected to the support substantially horizontally mounted on said first member.

4. In apparatus as defined in claim **3** said first member being a post slidably mounted in a sleeve on said structure, said second member being a rod slidably mounted in a sleeve on the lower end of said first member, and said adjustment fixing means comprising individual securing means at each sleeve.

5. In apparatus as defined in claim **4**, said members being cylindrical and being rotatably adjustable in said sleeves.

6. In apparatus as defined in claim **2**, said guide member clamping means comprising a releasable clamp on said ring and an upstanding rigid post on said guide member adapted to be clamped to said ring.

7. In apparatus as defined in claim **2**, said support being a rigid ring secured in one end of a member adjustably mounted on said structure, and said clamping means being mounted on the inside of said ring opposite the connection between said ring and said member.

8. In apparatus as defined in claim **1**, said guide member being a frame having a post adapted to be releasably clamped to said support and an arcuate track for receiving and directing said hose.

9. In apparatus as defined in claim **8**, the upper end of said post having a rod connecting formation whereby when the guide member is to be lowered down the passage a suitable length of rod may be attached to the post, said rod being of such length that when the guide member is disposed in the conduit the upper end of the rod is within the clamp and may thereby be secured rigidly to the support.

10. In the apparatus defined in claim **1**, said guide member having its upper end secured to said support with its lower end within the conduit in rigid contact with a conduit wall.

11. In the apparatus defined in claim **1**, said guide member comprising a frame in which the nozzle end of said hose is supported and an upstanding rigid rod fixed to the frame clamped to said support, and said frame having a projecting lip at its lower end for firmly engaging an upper surface of said conduit adjacent the lower end of said passage when the upper end of said rod is clamped to said support.