B. RICHARDS.

RECORDING ATTACHMENT FOR VALVES AND THE LIKE.

APPLICATION FILED MAY 7, 1917.

1,407,806. **Patented Feb. 28, 1922.**

3 SHEETS—SHEET 1.

Fig. 3

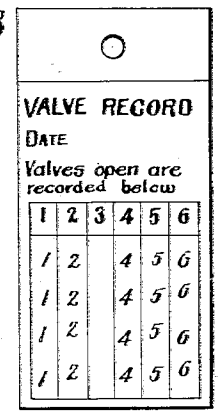

Fig. 2

Fig. 1

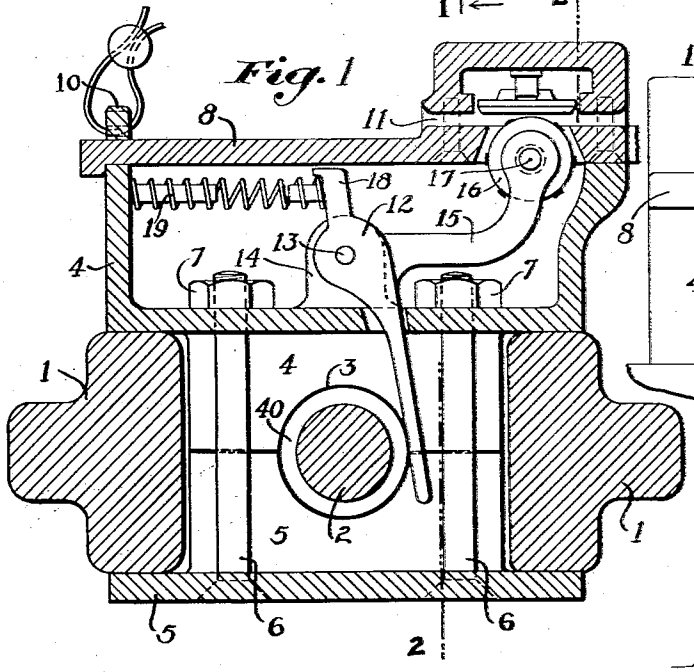

Fig. 4

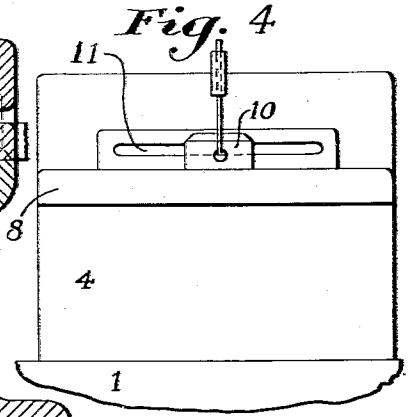

Fig. 12

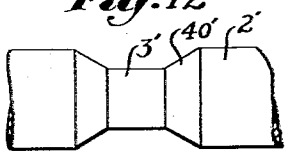

Inventor

Benjamin Richards

by Mitchell, Chadwick & Kent

Attorneys.

B. RICHARDS.

RECORDING ATTACHMENT FOR VALVES AND THE LIKE.

APPLICATION FILED MAY 7, 1917.

1,407,806.

Patented Feb. 28, 1922.

3 SHEETS—SHEET 2.

Fig. 3

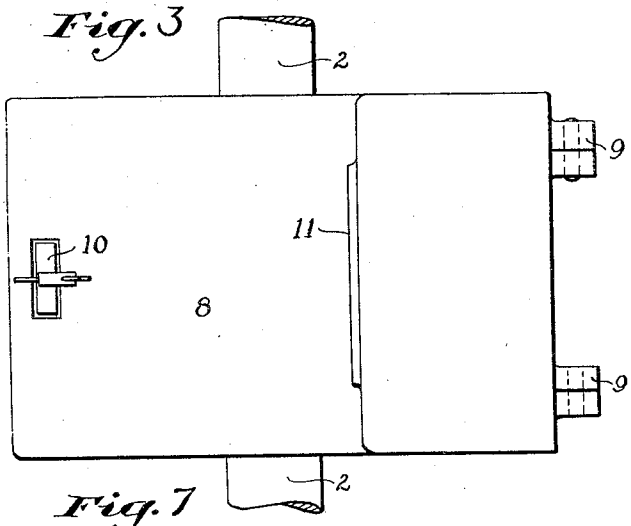

Fig. 7

Fig. 10

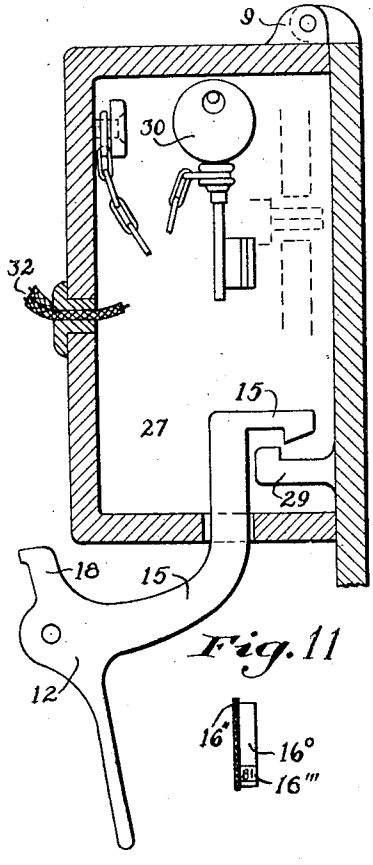

Fig. 11

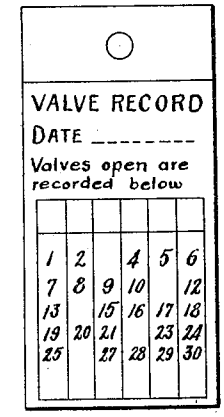

Fig. 9

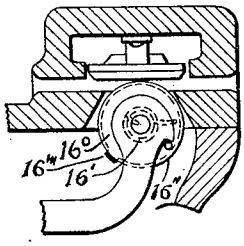

Fig. 5

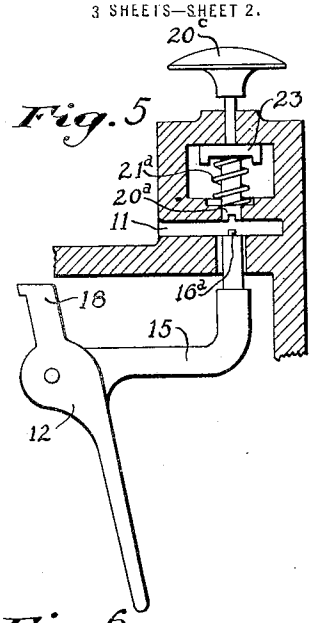

Fig. 6

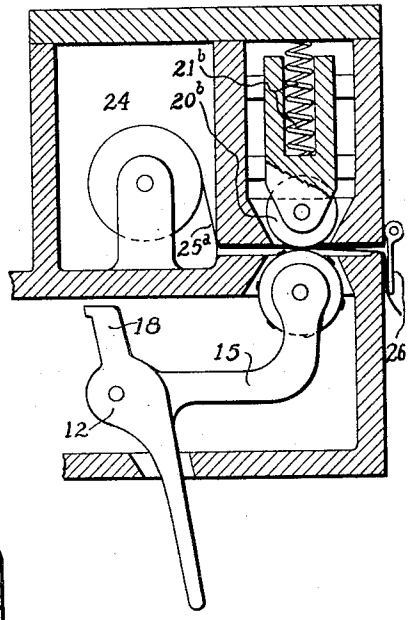

Inventor

Benjamin Richards

by Mitchell Chadwick & Kent

Attorneys.

B. RICHARDS.

RECORDING ATTACHMENT FOR VALVES AND THE LIKE.

APPLICATION FILED MAY 7, 1917.

1,407,806. Patented Feb. 28, 1922.

3 SHEETS—SHEET 3.

Fig. 13

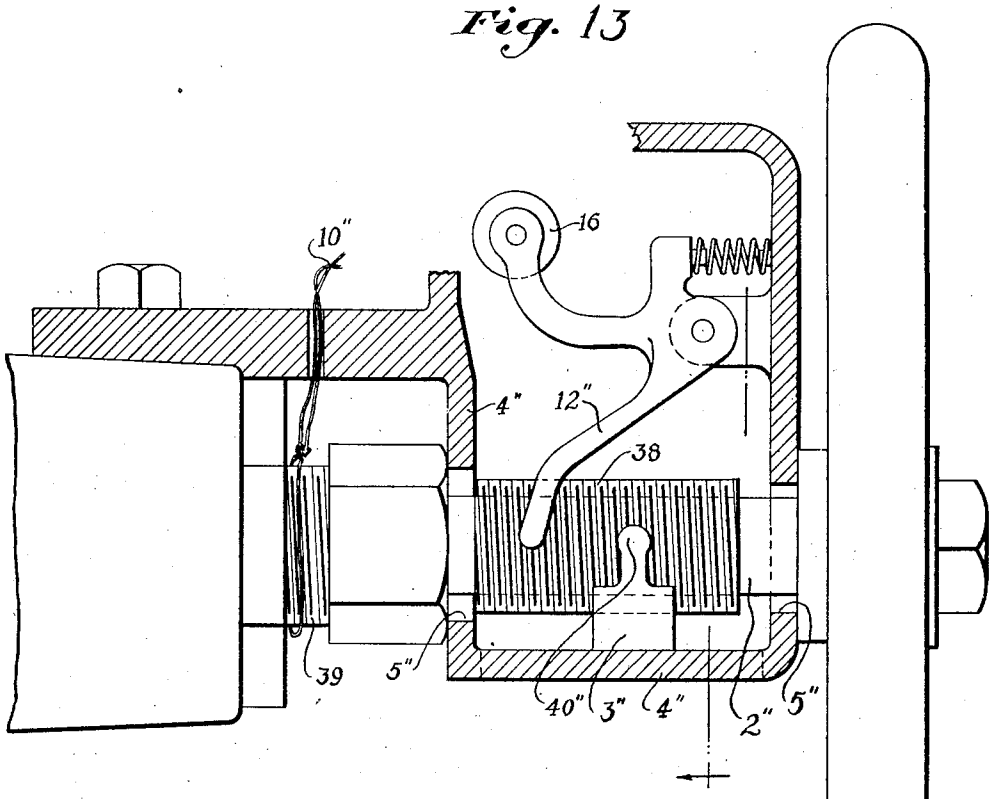

Fig. 14

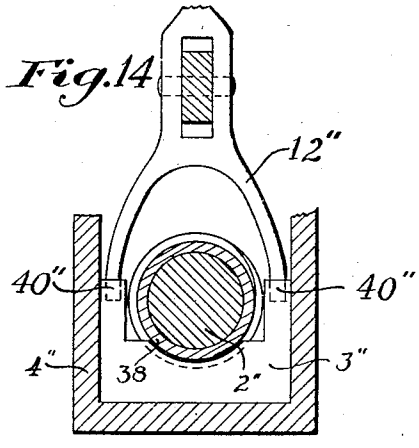

Inventor

Benjamin Richards.

by Mitchell, Chadwick & Kent

Attorneys.

UNITED STATES PATENT OFFICE.

BENJAMIN RICHARDS, OF CANTON, MASSACHUSETTS, ASSIGNOR TO NEWMAN CLOCK COMPANY, INC., OF NEW YORK, N. Y., A CORPORATION OF NEW YORK.

RECORDING ATTACHMENT FOR VALVES AND THE LIKE.

1,407,806. Specification of Letters Patent. Patented Feb. 28, 1922.

Application filed May 7, 1917. Serial No. 166,788.

To all whom it may concern:

Be it known that I, BENJAMIN RICHARDS, citizen of the United States, residing at Canton, in the county of Norfolk and State of Massachusetts, have invented new and useful Improvements in Recording Attachments for Valves and the like, of which the following is a specification.

This invention relates to improvements in recording attachments. More particularly, it is here described as an attachment that may be applied to valves used in sprinkler systems arranged for fire protection for showing whether each valve is open or closed; but it may be used in many other situations where the results which it accomplishes are advantageous.

A sprinkler system ought to be perfectly automatic, so that it will act without fail on the occurrence of the conditions under which it is expected to act. Yet fire losses are constantly happening because of a supposedly automatic sprinkler system being out of service at the time of fire, owing to the valve controlling its water supply being closed. Such closure may happen in various ways, as in case the valve is shut to permit the making of repairs and is afterwards forgotten, or is shut by carelessness, or by mistake. The danger is such that, for the maintenance of adequate fire protection, the utility is recognized of a device by which some responsible person can have prompt and unfailing notice if one of the valves be closed, whatever the reason. Various methods for supervising the condition of such valves have been devised. Among them are electrical appliances, but these involve a complicated system with a central station, and can be available only in a few of the many cases where it is desirable to have protection, and they furthermore involve considerable expense, both for installation and for maintenance. Another device is to have the valves inspected at stated intervals, by one who makes a written report. The success of this, however, depends entirely upon the inspector's honesty, fidelity and reliability. Another method is to seal every valve in its open condition and to apply a tag with the expectation that whenever the seal is broken in order to close the valve an entry will be made upon the tag to indicate the reasons for closing and the condition of the valve. But this and other methods depend more or less upon human frailty, or on electrical devices which are themselves liable to interruptions and disturbances in their operation. It is an object of the present invention to provide for the making of a record as to the condition of the valve in such manner that the person inspecting it cannot possibly misrepresent the facts, and in particular cannot make a record that a valve is open, unless the valve is in fact open. The invention provides a device which may be attached to the valve whose condition is to be supervised, and which will automatically register a character showing the condition on a card or other suitable recording material, when the card is inserted in the device by the inspector whose duty it is to make the inspection, record and report. The condition of all of the valves within the scope of the inspector's duty being thus recorded upon a card, the card record will show the superintendent at a glance just which valves are open. The absence of a record will show either that the particular valve is not open or that the inspector has committed a breach of duty in not visiting it.

The objects of the invention are accomplished by providing apparatus controlled by the action of the stem or handle of the valve. As the stem is inseparably associated with the valve, its movement to open or close being definite, a record of the position occupied by the stem or of the position of a part moved by the stem, in case of a rotary stem, shows the condition of the valve. The recording character for one valve may differ from that provided for another in the same sprinkler system, so that a series of valves can be inspected in turn, the record of each being automatically made in a different place on the card, and being so distinctive from the record of the others that even if the place were the same, the deception would be perceived. In the particular form of the invention illustrated, a variation in diameter between the two parts of the valve stem controls the recording part of the apparatus. The lever displacement is determined by what part of the stem is engaging it, and, according to the degree of its displacement, the lever sets printing apparatus so that an impression will or will not be made when the inspector's card is inserted. The general principles which are applicable to watchman's clocks

may, to a considerable extent, be applied to the construction and control of the records. An embodiment of the invention is illustrated in the accompanying drawings, in which:

Figure 1 is a plan, in section on the line 1—1 of Figure 2, of an embodiment of the invention attached to a valve, assuming the stem of the valve to be set vertically;

Figure 2 is a side elevation of the same in section substantially on the line 2—2 of Figure 1;

Figure 3 is a face view of the apparatus;

Figure 4 is an elevation showing the exterior, viewed from the opposite direction as compared with Figure 2, and omitting the fastening means;

Figure 5 is a plan, corresponding to Figure 1, showing a modification of a detail, a punch being substituted for printing apparatus;

Figure 6 is a similar view, of the general style shown in Figure 1, but showing a modification in the arrangement of the recording mechanism;

Figure 7 is a plan, corresponding to Figure 1, showing another modification, in which the invention is applied to an ordinary watchman's recording system;

Figure 8 shows a type of recording card which may be used with the design of Figures 1, 2 and 3;

Figure 9 is an elevation corresponding to Figure 1, showing another modification;

Figure 10 shows a type of recording card which may be used with the design of Figure 9;

Figure 11 illustrates an edge view of a detail of Figure 9;

Figure 12 is a modification of another detail;

Figure 13 indicates a method of applying the invention to a different type of valve; and

Figure 14 is a section through parts thereof.

Referring to the drawings, the yoke of the valve is marked 1, and the valve stem guided thereby is marked 2. On that stem is a cylindrical enlargement or boss 3, the details and function of which are hereinafter more fully explained, which is the active means for controlling the indicating and recording device which will first be described. A box 4, preferably metallic, is provided to hold the recording apparatus, and is adapted to be made fast to the yoke 1 by a strap or bridge 5 on the remote side of the yoke, to which the box 4 is connected by bolts 6 having screw nuts 7 within the box. The heads of the bolts may be counter-sunk flush with the surface of the strap 5, so as to afford no hold to a tool for unscrewing them. The box 4 has a cover, fastened by hinges 9, and a perforated tongue 10 which passes through a hole in the cover 8 like a staple, so that the cover may at this place be fastened in its closed position with any suitable device, such as a padlock, or, as illustrated, with a metallic seal. This provides so that the box 4 and its contents can be set in any desired predetermined position on the yoke 1, without it being possible for anyone to remove it, or change its position, without first opening the sealed box. For the same reason the mechanism within it is inaccessible to anyone who might wish to tamper with it, except as the recording part of it may be reached through the slot 11 in the course of ordinary operation of the device. Within the box a lever 12 is provided, supported on a pivot 13 conveniently held in two internal bosses 14, or otherwise suitably held, and having an arm which extends through a hole in the wall into the space between the two members of the yoke 1 at such an angle and position that it can bear against the valve stem 2 and with sufficient play so that it can ride on its surface or upon the surface of the boss 3 on the stem, the edge of the boss having a cam surface, if necessary, for shifting the lever. The other arm of this lever is marked 15, extends toward the slot 11, and carries a printing wheel 16 pivoted at its end on a pin 17. A projection 18 extends from some convenient part of the lever and is engaged by a spring 19, which presses upon it so as to force the outer arm of the lever 12 toward the axis of the valve stem 2, so that whatever be the position of the valve stem, with the valve open or closed or in any intermediate position, the lever 12 is pressed against the stem. Obviously, therefore, when the boss 3 is opposite the lever arm, that lever will be held with the spring 19 in a state of tension and with the printing wheel 16 at its limit of travel toward the slot 11. The parts are so designed and set that when the valve is open the lever is engaged on the boss of the stem, so that when the lever is thus at its limit of travel its printing wheel projects a little way into the slot 11, coming close to a platen 20 which forms the other wall of the inside part of the slot, and which is pressed by a spring 21 toward the printing roller 16, and can yield therefrom when a card is introduced between them to receive an impression from the roller. As seen in Figure 2, the roller may occupy only a part of the width of the slot; but it is definitely fixed in whatever place it occupies by a pair of spacing sleeves 22 on the pin 17 which holds it, one of these sleeves intervening between it and one arm of the yoke, 15, and the other between it and the other arm of the yoke 15. It is contemplated that where a plant has several valves, whose positions are to be recorded, each valve may have its own par-

ticular printing wheel, located in a different position on the pivot pin 17, so that a single card can be used for the recording of all of the valves, and the record for each valve thereon will be in a different location, somewhat as indicated in Figure 8, for each of the six valves there provided for.

In apparatus thus constituted, the boss 3 and its cam abutment 40 are elements which move whenever the valve moves and are at the same time organic parts of the recording apparatus, for these parts move the lever 12 into and hold it in the position which it must occupy during the making of a record. The boss 3 is the ultimate support of the record card in what may be termed a printing press, by which the record is printed on the card, said card being inserted through the slot 11 and pressed between the wheel 16 and platen 20. It thus constitutes an organic part of the recording apparatus, which becomes dis-organized sufficiently to prevent its operation when the valve, and consequently the boss 3 and abutment cam 40 are out of their normal position. Neither the valve, valve stem, nor said boss and abutment will operate members of the recording apparatus, which is operated by means other than the valve operating means, as for example, by the hand of a watchman or inspector in thrusting the record card into the slot 11. When a card is so thrust in, a record is printed upon it by the apparatus; the card being compressed between the printing wheel 16 and the platen 20, if the form of Figures 1—4 be used, or that of Figure 9, while the apparatus is operated by manual depression of the knob 20^c punching a hole, if the apparatus of Figure 5 be employed. In either event, however, the record is affected by the position of the boss 3, Figure 1, or the depression 3′, if the form of Figure 12 be used, or the block 3″, if the form of Figure 13 be used, because the disorganization of the recording apparatus which occurs with the moving of this part from its normal position prevents the making of a record when the card is pushed in, in Figures 1–4, or the knob depressed in Figure 5, etc.

In the form of invention specifically referred to above, the type wheel 16 is freely rotatable on the shaft or pin 17.

In the apparatus illustrated, the printing would be made by impression of the hard steel type in the soft material of the card but ink printing or other style of marking might be substituted at pleasure. In a system so arranged, in which the location of the record on the card identifies the valve, it is immaterial what the matter printed is, although, as the drawings suggest, it may conveniently be chosen to be a number which designates the valve and which designates also the position on the card where the record of that particular valve should be made. However, it would be possible to duplicate the capacity of the system, without doubling the size of a card, by providing a distinctive record mark for each valve, in which, for example, one valve is number 6 and another whose printing wheel is similarly located in the slot, but may have a different diameter or spacing of its character is number 12. In such a case both the impression 6 and the impression 12 would be made in the same column on the record card; but both would be legible, and the absence of either would be easily discernible. Any other device might be employed by which a variety of impressions are made in the same section of the card, as for example, the style illustrated in Figures 9 and 11, where the printing wheel 16° has a weak spring 16′ which causes it always to return to the same angular position, and has a knurled edge 16″ so that when the card is inserted the wheel begins to turn, and has its printing character 16‴, for example, 6, or 12 or 18, or other multiple of 6, located at a predetermined distance from the initial position of the wheel, with the result that although the number 6 and its multiples are all printed in the same column of the card, each is printed but once and is printed at such a proper distance from the bottom of the card as will not interfere with the printing of any of the other contents which belong in the same column. Such a card is shown in Figure 10.

Numerous modifications of the invention may be made within the scope of the appended claims, but one is illustrated in Figure 5, which shows the lever 12 having the arm 15 as in Figure 1, but the arm 15 carries one member of a punch 16^a, instead of the printing wheel 16, in the slot 11; and on the other side of the slot is the other member 20^a, of the punch in place of the platen 20. This may have a spring 21^a, to hold it normally retracted, and an external knob 20^c, may be provided by which the inspector can depress the punch member 20^a, and thus make a punch impression on his card when the card is inserted, a boss, 23, being provided through which the stem of the punch member 20^a extends to the outside of the apparatus to the knob 20^c.

The face of this boss is so located that it arrests the depression of the handle 20^c, and so of the die 20^a, far enough above the bottom of the slot 11 so that no impression will be made on the card unless the other member 16^a of the die is in its printing position which corresponds to the open position of the valve.

Another modification is illustrated in Figure 6, where there is a lever and an arm, and a printing wheel as in Figure 1, but the platen 20 is replaced by a roller 20^b pressed toward the printing wheel by a spring 21^b,

and an adjoining chamber 24 is provided for a piece of tape 25ª which extends through the slot between the printing roller and its pressing roller to the outside of the apparatus. On the outside a flap 26 hangs down over the slot providing an edge on which the tape can be torn, leaving a projecting end that can be grasped when the next record is taken.

Another modification is illustrated in Figure 7 where the end of the arm 15 is not a printing appliance but is a latch. In this case the latch is within an adjacent box 27 and engages a post 29 on the door of the box holding the door closed except when the valve is open, at which time the different position of the boss 3 allows the lever to move to a position disengaging the part as illustrated, leaving the door free to be opened. Within the box is a watchman's key 30, of any ordinary or suitable type, by which the watchman can make a record on his portable watchman's clock; or there may be a magneto key represented by the dotted lines in Figure 7 and connecting through wires 32 with a central recording appliance, according to any ordinary or suitable system. In either of these arrangements, the inspector cannot get the door of this box open unless the position of the valve stem 2 has set the latch open; and so the absence of his record indicates that the valve is closed, or at least is not open to the prescribed degree, or that the station was not visited.

The device by which the position of the valve stem controls the recording may take various forms. In Figure 12, for example, it is illustrated as a reduction of diameter of valve stem, as at 3′ with sloping cam shoulder 40′ constituting the abutment. In that case the connected lever, spring and printing parts would be rearranged as requisite. In either event, whether the lever controlling device be a boss, as in Figures 1 and 2, or a depression as in Figure 12, it may be arranged at such a position on the valve stem, and the lever will be so arranged with respect thereto, and so controlled by a spring, that it will be moved into position for making a record only when the valve is open to a degree which is predetermined by the location of this lever controlling device on the valve stem. And this in turn will be located only at a place that corresponds to what is deemed a sufficient opening. If a boss be used as in Figures 1 and 2, this may preferably take the form of a collar fastened on the stem by suitable means, such as by soldering.

If the style indicated in Figure 7 or any modification of it be employed, the device can combine in itself automatically a record of the watchman's faithful attention to duty in visiting the assigned parts of the premises under his care, and a record that the valve at each such place is open, together with the time of such visit and condition. He cannot make his record unless he visits the place, nor can he make it even then, unless the valve is open; and when he does make it the ordinary watchman's apparatus records the time and station. In this case no separate card record, such as that typified in Figure 8, is requisite.

While the invention has been described as it may be applied to a sprinkler system for fire protection it may be used for valves controlling any kind of conduit, as for example, steam or other gases; and in cases where it is regular practice that the valve may properly be either opened or shut as where steam is used for heating purposes, the record of the apparatus taking it may constitute a sort of meter record by showing how many hours steam is flowing. And the apparatus may be applied to devices other than valves with like effect.

Figures 13 and 14 illustrate an application of the device to a valve having an inside screw for lifting the gate, in which the exposed part of the stem 2″ has only rotary motion. In this case the stem is smooth, passes into the valve body through a gland packing 39 and has no accessible part moving longitudinally in the direction of its axis. A part which serves that purpose so far as the invention is concerned is provided in the movable block 3″ which lies close to the stem and has upstanding parts 40″, one on each side of the stem, adapted to engage the lever 12″ which in this case is forked to engage the two abutments 40″, but which carries a printing wheel 16 like that of Figure 1 or may otherwise serve as a recording device. The sleeve 38, brazed or otherwise secured on the exposed part of the stem 2″, has a screw thread engaging with threads on the block, and the wall of the enclosure keeps the block close to the sleeve; so that rotation of the stem causes the block 3″ to move in the direction of the axis of the stem whenever the stem is rotated so as to move the valve. The parts may be designed as to pitch of screws, etc., so that the abutment 40″ will reach the position where it sets the recording lever 12″ into working position when the valve is open; and will hold that lever in recording position so long as it stays there; and will let it move to unrecording position whenever the valve is closed to any degree which is predetermined as being a condition of closure which the recording apparatus should indicate. This block and sleeve are represented as being encased within a box 4″ which has holes 5″ permitting the box to be slipped over the end of the valve stem, when the wheel handle is removed. This so completely encloses the block 3″, and particularly the lever 12″, as to render the same inaccessible while it is in-

stalled on the stem. The parts may be sealed by any suitable means, as by a wire tied around the gland and passing through a hole 10'' in the support of box to the lid of the box, the latter being not fully shown in this figure.

One method of operating a system embodying the specific form of invention illustrated in Figs. 1 and 2 may be described in greater detail as follows. Assume that a sprinkler system to be supervised comprises six valves. Each of these valves would be provided with mechanism such as that clearly illustrated in Figs. 1 and 2 but these differences between the mechanism associated with each valve and that of the remaining valves should be noted. The type on the periphery of the wheel 16 at the first valve would be such as to print the numeral 1, on proper actuation of the device; the type on the periphery of the wheel 16 at the second valve would be such as to print the numeral 2, and so on.

The wheel 16 is shown in Fig. 2 as provided with type adapted to print the numeral 6 so that, in the system now outlined, this would be the sixth valve of the system. A further difference is to be noted. Calling attention to Fig. 2 it will be seen that the printing wheel 16 occupies a position rather far to the left on the pin 17. The roller or wheel 16 of valve number 5 of the system above outlined would occupy a position on its pin 17 a little further to the right, the wheel 16 of valve number 4 would occupy a position on its pin 17 still further to the right, and so on. Let us now assume that a card exactly like the one illustrated in Fig. 8—except that the spaces below the uppermost horizontal row of numerals 1, 2, 3, 4, 5, 6 are blank—is furnished to the watchman or other attendant. The latter starts on his rounds, visiting say valve number 6 first. He inserts the card into the slot 11 and if the valve at that station is fully open the following result is obtained. The insertion of the card into said slot 11 causes it to enter between the printing roller 16 and its spring-pressed platen 20. The wheel or roller 16 is rotated by the translatory movement of the card and impresses or prints a plurality or series of numerals 6, 6, 6, etc., which appear in the vertical column or row of the card (see Fig. 8) directly below the uppermost numeral 6. If the valve had been closed at the time of insertion of the card into the slot 11 the wheel or roller 16 would have occupied such a position below the slot 11 that it could not engage the card. In this event no record would be produced in the last mentioned vertical column of the card and the latter would be blank below the uppermost numeral 6 shown in Fig. 8. When the watchman visits any of the other valves he repeats the operation described above, at that particular valve, and if the latter is fully open the entry of the card into the particular slot 11 will produce a record upon the card in the vertical column corresponding to the particular valve.

The specific card illustrated in Fig. 8 indicates that the watchman visited valves numbers 1, 2, 4, 5 and 6 of the system, and that such valves were fully open at the time of such visit. The vertical column under the uppermost numeral 3 of the card is blank which indicates either that the watchman failed to visit the corresponding valve to secure a record or that this particular valve was not fully open at that time. In either event the watchman has failed in his duty, assuming that it is his duty to open a valve which he finds partially closed.

The operation of the other forms of the invention will be apparent in view of the foregoing description and further explanation is unnecessary.

In its broader aspects, the invention is applicable to various types of valves. Thus, the valve illustrated in Fig. 2 is one in which the non-rotatable stem 2 is adapted to be moved rectilinearly by rotation of the hand wheel, to operate the valve. On the other hand, the valve illustrated in Fig. 13 is one in which the non-sliding stem 2'' is adapted to be rotated by rotation of the hand wheel, to operate the valve.

I claim as my invention:—

1. The combination with a valve, and means for operating it, of a recording device which is operative so long as the valve is in a predetermined normal position, and means operated by movement of the valve for disorganizing the recording device sufficiently to prevent its operation so long as the valve is out of said normal position.

2. The combination of a valve and means for opening and closing it; a recording device operable by means other than the valve operating means; and connections controlling the organization of the recording device whereby it is workable by said other means when the valve is open and is not workable thereby when the valve is closed.

3. A recording attachment for valves and the like including an abutment adapted to be oppositely moved by opposite movements of the valve stem; and a recording device arranged and adapted to be set and held by the abutment in position to be operated when the valve is in a predetermined position.

4. A recording attachment for valves and the like including in combination a valve; a stem therefor moving rectilinearly with the opening and closing of the valve; and a screw engagement of the stem whereby the rectilinear movement for opening or closing is accomplished by a plurality of complete rotations; means for making a record; a

device whereby it may be either operative or inoperative; an element adapted to be made fast to said valve stem; and means whereby the movement of said element resulting from normal movement of the valve stem causes said recording attachment to be rendered operative when the valve stem is moved into open valve position, and inoperative when it is moved into closed valve position.

5. A recording attachment for valves and the like comprising, in combination with a valve having a stem moving rectilinearly to open or close the valve, an abutment moved by movement of the valve stem; a lever actuated by movement of the abutment, and a recording device adapted to be set by the lever in position for permitting or preventing the making of a record.

6. A recording attachment for valves and the like comprising, in combination with a valve having a stem moving rectilinearly to open or close the valve, an abutment moved by movement of the valve stem; a device for making an impression on paper; a lever adapted to move it into or out of position for making such impression; said lever being actuated by movement of said abutment, and being held thereby against being moved until the abutment is moved in the reverse direction.

7. A recording attachment for valves including in combination, a valve, a stem therefor moving rectilinearly with the opening and closing of the valve, an abutment secured to said stem, a printing wheel, a lever adapted to move said wheel into or out of position for printing, said lever being actuated by movement of said abutment, means for causing the wheel normally to assume a predetermined position when idle, means whereby the wheel begins to rotate when a record card is presented and moves with said card as the latter is inserted, the printing type on the wheel being arranged at a predetermined distance from the part of the wheel which first contacts with the card, whereby the record is made at a specific predetermined distance from the end of the card.

8. A recording attachment for valves and the like comprising an abutment moved by movement of the valve stem; a printing wheel; a lever adapted to move it into or out of position for printing; said lever being actuated by movement of said abutment, and being held thereby against being moved until the abutment is moved in the reverse direction.

9. A recording attachment for valves and the like comprising an abutment moved by movement of the valve stem; a printing wheel; a lever adapted to move it into or out of position for printing; said lever being actuated by movement of said abutment; means to cause the wheel to normally assume a predetermined position when idle; means whereby the wheel begins to rotate when a record card is presented and moves with it as it is inserted; the printing type on the wheel being arranged at a predetermined distance from the part of the wheel which first contacts with the card, whereby the record is made at a specific predetermined distance from the end of the card.

10. A recording attachment for valves and the like including a device adapted to make a record; means whereby it is operative and inoperative respectively in open and closed positions of the valve, said means being connected with the valve stem and controlled by movement thereof; and a sealed enclosure surrounding said means and the part of the valve stem with which it is connected, there being provision for access of sheet material from the outside to the recording device to receive the record thereof while the enclosure remains sealed.

11. A recording attachment for valves having a stem and a yoke guiding the stem, including a device adapted to make a record; means whereby it is operative and inoperative respectively in open and closed positions of the valve, said means being connected with the valve stem and controlled by movement thereof; a box adapted to rest against the yoke of the valve, a strap adapted to rest against the side of the yoke remote therefrom, these two with the yoke constituting an enclosure for said connection; fastening means for said strap, reaching to and secured within said box; the cover being provided with means for private control of its opening.

12. A recording attachment for valves and the like including means to enclose a portion of the stem of the valve; an abutment within the enclosure, moved by movement of the valve stem; a recording apparatus; controlling means therefor, within the enclosure and actuated by the abutment and adapted to permit or to prevent operation of the recording apparatus.

13. The combination with a valve provided with an operating member and a member operated thereby, of a normally operative record producing means, and means actuated by the movement of one of said members from its normal position, for disorganizing, and thereby preventing operation of, said record producing means while the valve is not in its normal position.

14. The combination with a valve provided with a stem and an operating member for actuating said stem to move the valve from its normal position, of a normally operative record producing means, and means actuated by the movement of said stem for separating organic parts of said record producing means and thereby rendering it in-

effective when the valve is moved from its normal position.

15. The combination, with a valve and a recording apparatus, of a member connected to the valve, moving when the valve moves, constituting an organic part of the recording apparatus, and by its position affecting the record made thereby; said recording apparatus being adapted to be operated by means other than the valve operating means.

16. The combination, with a valve and a recording apparatus, of a member connected to the valve, moving when the valve moves, and constituting an organic part of the recording apparatus; said recording apparatus being adapted to be operated by means other than the valve operating means; said member by its position rendering the recording apparatus workable or non-workable to form a record when said other means is operated.

17. The combination, with a valve and a rectilinearly movable stem for operating it, of a recording device and means controllnig the recording thereof; said means being movable in the longitudinal direction of the stem to effect said control and being engaged with and so moved by the valve stem.

18. The combination of a valve; a stem therefor; recording apparatus; and connecting means whereby the record of the recording apparatus is affected by the position of the valve, said means including a cam whose surface rises with longitudinal movement of the valve stem.

19. The combination, with a valve, of a recording apparatus recording the position of the valve and adapted to be operated by means other than the valve operating means, and a cam connected with the valve stem moving therewith, and controlling the recording apparatus according to the position of the valve.

20. The combination of a valve; a stem therefor; recording apparatus, adapted to be operated by means other than the operating means of said valve; means whereby the operation of said recording means may be prevented or permitted; and an intervening cam, moved by said stem, adapted to control said preventing or permitting means, and arranged to operate said control during the initial part of the movement of the stem from a predetermined normal position of the valve.

21. The combination of a valve; a stem therefor; recording apparatus; and connecting means whereby the record of the recording apparatus is prevented or permitted according to the position of the valve; said means including a cam whose change of elevation corresponds to the initial movement of the valve from its normal position, the cam being adapted to maintain the changed relation thus introduced substantially unaltered during the remainder of the travel of the valve.

22. A supervisory mechanism comprising in combination, a valve provided with an operating member and a valve stem operated thereby, a record-producing means manually operable independently of said valve when the latter is in normal position for recording such condition, and means actuated by longitudinal movement of said stem from its normal position for preventing manual operation of said record-producing means when said valve is not in normal condition.

23. A supervisory mechanism comprising in combination, a valve, means for operating the valve, a record-producing device biased to inoperable position and manually operable independently of said valve when the latter is in normal position for recording such condition, and means controlled by said valve-operating means for rendering said device manually operable when said valve is in normal position.

24. A supervisory mechanism comprising in combination, a valve, an operating element therefor, a recording device manually operable independently of said valve when the latter is in normal position for recording such condition, and power means controlled by said element for controlling the operativeness of said device.

25. A supervisory mechanism comprising in combination, a valve, an operating element therefor, a recording device manually operable independently of said valve when the latter is in normal position for recording such condition, and means controlled by said element for imparting movement to said device during only a portion of the total movement of said element in operating said valve.

26. A supervisory mechanism comprising in combination, a valve, a record-producing device manually operable independently of said valve when the latter is in normal position for recording such condition, a container for said device having an opening through which said device is movable, a member for operating said valve, and means controlled by said member for imparting movement to said device only during a part of the movement of said valve toward closed position.

27. A supervisory mechanism comprising in combination, a valve, a manually operable record-producing device movable from a position in which it is accessible to a position in which it is inaccessible, a member for operating said valve, means controlled by said member for moving said device to its inaccessible position on initial movement of said valve from full open position, and means for preventing subsequent movement of said device until said valve is subsequently moved to a substantially wide open position.

28. A supervisory mechanism comprising in combination, a valve, a casing, an arm pivotally mounted within said casing, a record-producing device connected to said arm and manually operable independently of said valve when the latter is in normal position for recording such condition, and means for operating said arm by movement of said valve.

29. A supervisory mechanism comprising in combination, a valve, a container, a record-producing device biased to a position within said container and manually operable independently by said valve when the latter is in normal position for recording such condition, and means controlled by actuation of said valve for preventing manual operation of said device when said valve is in abnormal condition.

Signed by me at Boston, Massachusetts, this second day of May, 1917.

BENJAMIN RICHARDS.

Witnesses:
JOSEPH T. BRENNAN,
EVERETT KENT.

Certificate of Correction.

It is hereby certified that in Letters Patent No. 1,407,806, granted February 28, 1922, upon the application of Benjamin Richards, of Canton, Massachusetts, for an improvement in "Recording Attachments for Valves and the Like," an error appears in the printed specification requiring correction as follows: Page 8, line 14, claim 29, for the word "by" read *of;* and that the said Letters Patent should be read with this correction therein that the same may conform to the record of the case in the Patent Office.

Signed and sealed this 4th day of April, A. D., 1922.

[SEAL.]

KARL FENNING,

Acting Commissioner of Patents.