A. H. Rau.

Station Indicator.

No. 27,068. Patented Feb. 7, 1860.

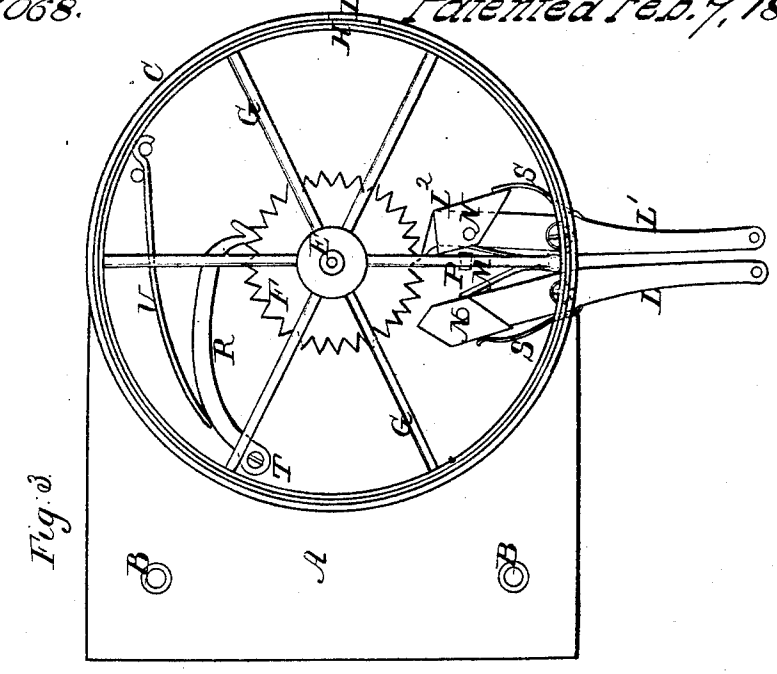

Fig. 3.

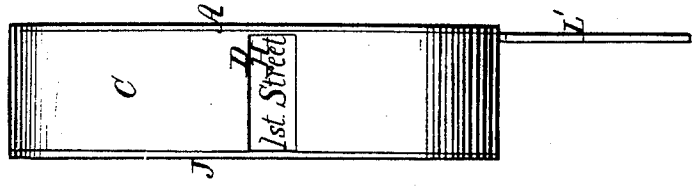

Fig. 2.

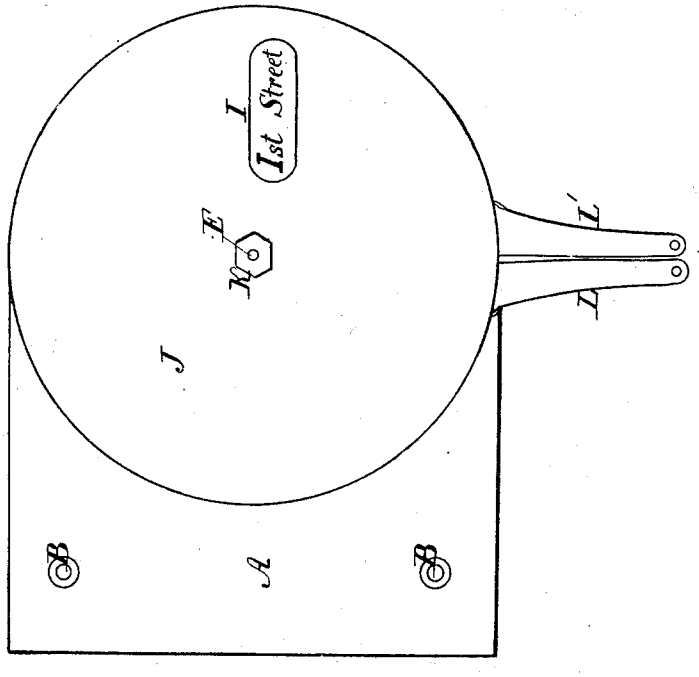

Fig. 1.

N. PETERS, PHOTO-LITHOGRAPHER, WASHINGTON, D. C.

UNITED STATES PATENT OFFICE.

ADOLPH H. RAU, OF PHILADELPHIA, PENNSYLVANIA.

STATION OR STREET REGISTERING INDICATOR.

Specification of Letters Patent No. 27,068, dated February 7, 1860.

To all whom it may concern:

Be it known that I, ADOLPH H. RAU, of the city and county of Philadelphia and State of Pennsylvania, have invented a new, useful, and Improved Station-Indicator; and I do hereby declare that the same is described and represented in the following specification and drawings.

To enable others skilled in the art to make and use my invention I will proceed to describe its construction and operation, referring to the drawings, in which the same letters indicate like parts in each of the figures.

Figure 1, is a front elevation of my indicator. Fig. 2, is an elevation of the edge or side. Fig. 3, is a front elevation with the front plate and dial removed to show the interior.

The nature of my invention consists in a rim or dial carrying the numbers or names of the streets or station provided with certain devices for turning and holding said rim or dial, which will be described in the following specification.

In the accompanying drawings A, is a plate of metal which may be made in the form shown or in such other form as will answer the purpose, and provided with two holes B, B, for the screws to fasten it in place. Upon the plate A, the cylindrical rim or flanch C, is fastened, with an opening D, through which the numbers or names of the streets may be seen as shown in Fig. 2.

In the center of that portion of the plate A, which is surrounded by the rim C, the stud E, is fastened, for the ratchet wheel F, to turn on, which ratchet is provided with a long hub, having a series of arms G, G, carrying the cylindrical rim H, which has the numbers or names of the streets or stations marked on it, so as to be seen one at a time through the opening D, as the rim H, is turned as will be hereafter described. A card or face plate may be applied to the arms G, so as to turn with rim H, which card or plate may have the numbers or names of the streets or stations marked on it, so as to show or be seen through the opening I, in the plate J, which is applied to the rim C, and fastened by the nut K, on the stud E, shown in Figs. 1, and 2, of the drawings.

In order to enable the driver or conductor to turn the rim and plate which indicates the streets or stations, the levers L, L′, are arranged to vibrate on screws in the plate A, as shown in Fig. 3, and wires may be applied to these levers by which they may be vibrated so as to turn the wheel or ratchet F, one tooth every time one of the levers is pulled or vibrated. The spring M, is arranged betwen the inner ends of the levers L, L′, so as to throw the levers back after they have been pulled and hold them in a position to be pulled again: One of the levers turning the wheel in one direction and the other lever in the opposite direction. The ends of the levers which act on the wheel are hinged to the other part, or arranged to vibrate on the pins N, N, so that when the levers are pulled to the pin P, they turn the wheel one notch and as the lever is thrown back by the spring M, the end of the lever turns or vibrates on the pin N, as shown at L^2, in the drawing and slips by one notch or tooth; and after it has slipped by one notch or tooth, the feather spring S, throws the point of the lever out ready to be operated again, and so that it will stand out of the way of the teeth of the wheel, when it is turned by the opposite lever. The feather springs S, S, are fastened in scores in the levers L, L′.

To hold the wheel F, when it has been moved one tooth, until it is moved again, the pawl R, is arranged to vibrate on the screw T, and its end is made V shaped and pressed between the teeth of the wheel by the spring U, hard enough to hold the wheel in place unless it is turned purposely; and when so turned the teeth of the wheel slip by the pawl. Some kind of friction may be substituted for the pawl if preferred. Hinging the ends of the levers so that they will vibrate and slip by the teeth of the wheel after they have moved it and stand entirely clear of the wheel, so as to allow it to be turned in either direction without coming in contact with the ends of the levers is a very great improvement and may be applied to various purposes to advantage.

I contemplate that the wires which operate the levers may be made to operate a hammer to strike a bell at the same time. And that the rim H may be made angular so that a section would be V shaped and that the names or numbers of the streets or stations may be marked on each edge or angle or if made perpendicular to its axis, marked on both sides and arranged in the center of the top of a street railroad car, so that the pas-

sengers sitting on either side of the car can read the names of the stations.

I believe I have described and represented my improved station indicator so as to enable any person skilled in the art to make and use it.

I will now state what I desire to secure by Letters Patent.

In combination with a rim or dial carrying the numbers or names of the streets or stations, I claim the devices substantially as described for turning and holding said rim or dial.

ADOLPH H. RAU.

Witnesses:
GEO. W. ASH,
FREDERICK BREITINGER.