Feb. 13, 1968 R. S. STORMS 3,368,483

TWO-COLOR LITHOGRAPHIC PRINTING FORM, METHOD OF PREPARING SAME, AND METHOD OF USE

Filed May 10, 1965 2 Sheets-Sheet 2

Fig 5.

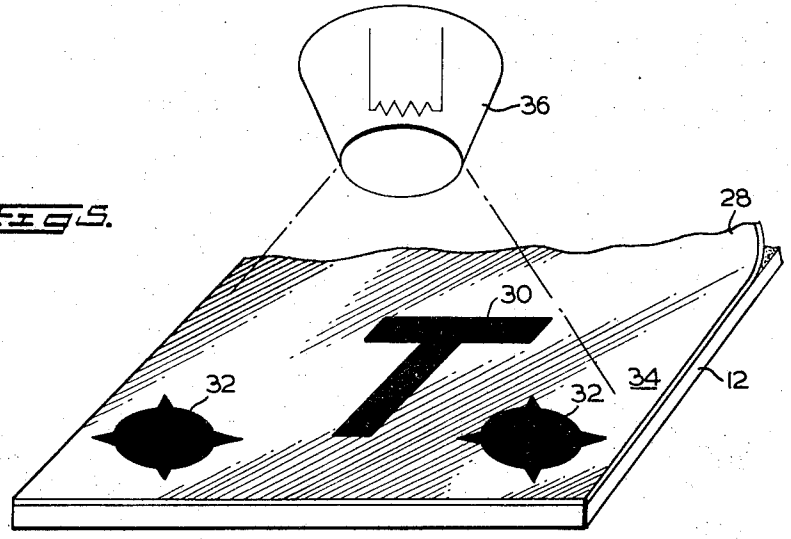

Fig 6.

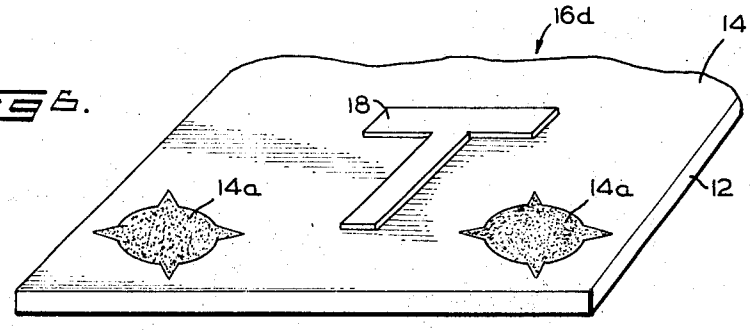

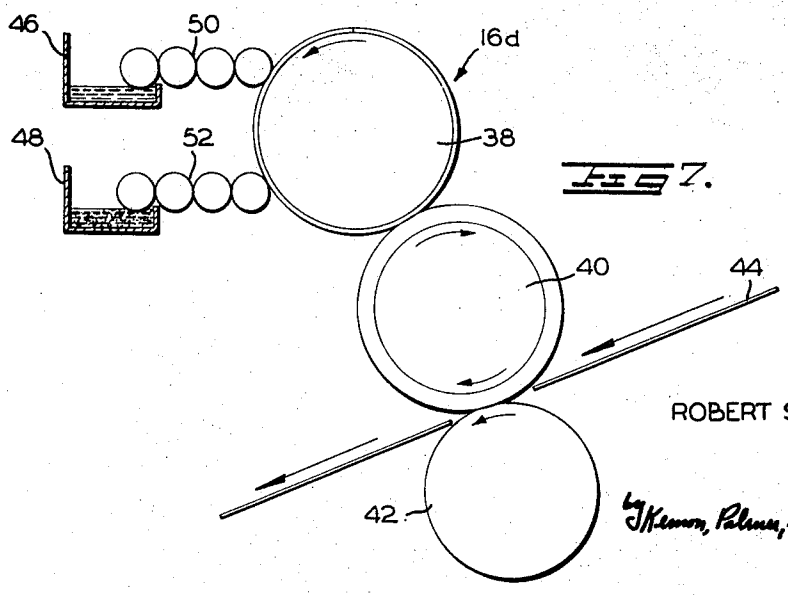

Fig 7.

INVENTOR
ROBERT S. STORMS

by Kenon, Palmer, Howard & Colebrook

ATTORNEYS

Feb. 13, 1968 R. S. STORMS 3,368,483

TWO-COLOR LITHOGRAPHIC PRINTING FORM, METHOD OF PREPARING SAME, AND METHOD OF USE

Filed May 10, 1965 2 Sheets-Sheet 1

Fig 2.

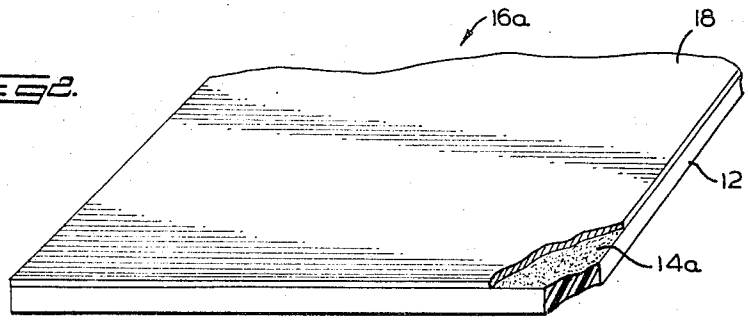

Fig 1.

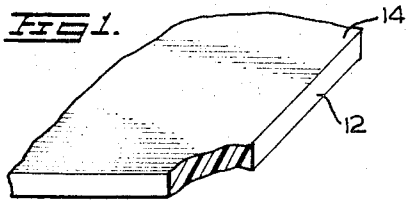

Fig 3.

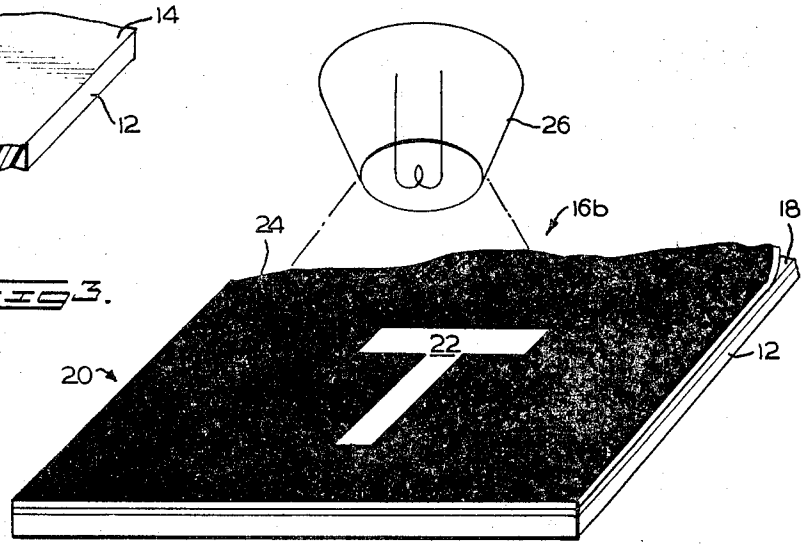

Fig 4.

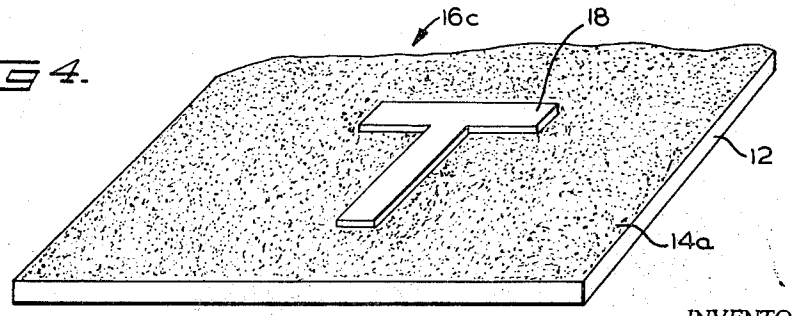

INVENTOR
ROBERT S. STORMS

BY Kenyon, Palmer, Stewart & Eichbrook

ATTORNEYS

United States Patent Office 3,368,483 Patented Feb. 13, 1968

3,368,483

TWO-COLOR LITHOGRAPHIC PRINTING FORM, METHOD OF PREPARING SAME, AND METHOD OF USE

Robert S. Storms, Dayton, Ohio, assignor to The Duriron Company Inc., Montgomery, Ohio, a corporation of New York

Filed May 10, 1965, Ser. No. 454,554
9 Claims. (Cl. 101—450)

ABSTRACT OF THE DISCLOSURE

A lithographic printing master for transferring ink of more than one color to a printed object in a single pass. A normally oleo-hydrophobic substrate is etched to render at least a portion thereof oleo-hydrophilic. A portion of the etched surface is then coated with a oleophilic, hydrophobic material to produce a master which has a portion thereof repellant to either water or oil based ink, a portion repellant to water based ink and attractive to oil based ink and a portion which, when coated with water based ink, is repellant to oil based ink.

This invention relates generally to lithographic printing and more specifically to a two-color lithographic printing process.

Lithographic or offset printing is widely in use as a modern printing technique. This form of printing is generally practiced by treating a master form so that a first portion thereof is hydrophilic or water receptive and the remaining portion thereof is oleophilic and hydrophobic, i.e., oil receptive and water repellant. In printing, the master is first contacted by water distributing rollers which deposit a film of water on the hydrophilic portion of the master. Ink distributing rollers are then contacted by the master, these rollers distributing an oil-base ink over the master. The ink adheres only on the oleophilic portion thereof since the oil base is repelled by the water film on the hydrophilic first portion of the master. The resulting ink image on the master is then, either directly or through intermediate transfer drums, impressed upon the surface to be printed so that the ink image is transferred thereto to accomplish printing thereof.

Although the present art is replete with variations of and improvements on the above basic process, it has heretofore been possible to print only a one-color print from a single master. For multi-color printing, additional masters are required, one for each additional color. Also, an equal number of plate rolls, transfer rolls and impression rolls must be provided in the printing apparatus for each master. Aside from the increased complexity and expense of the machinery obviously required for multi-color printing with the present art processes, it is extremely difficult to maintain the relationship or registration between the color images on the printed surface since paper feed, paper dimension, drum synchronization and other interrelating factors must be closely controlled to effect proper color registration.

The objects of the present invention may be listed as follows:

(1) To provide a lithographic system which is capable of simultaneously printing two colors with a single master form by providing a master form and method for making the same, different areas of the master being selectively receptive to inks of different bases.

(2) To provide a lithographic master form in which a first portion thereof is oleo-hydrophobic, a second portion is oleo-hydrophilic and a third portion is oleophobic-hydrophilic, so that water-base ink or dye of one color and an oil-base ink or dye of another color may be sequentially and discriminately deposited thereon.

(3) To provide a method and apparatus utilizing the above-described two-color lithographic master.

(4) To provide a process for two-color lithographic printing in which a single-color lithographic press may be readily converted to a two-color lithographic press.

(5) To provide a process for lithographic printing in which the color capability of any lithographic press may be doubled.

(6) To provide a lithographic master which utilized the properties of fluorocarbon film to achieve the above objects.

(7) To provide a method for processing coated fluorocarbon films to achieve the two-color lithographic master described.

(8) To eliminate the water roller section of the conventional offset printing press.

These and other objects will be more readily understood to those skilled in the art by reference to the following detailed description in conjunction with the accompanying drawings wherein like numerals indicate like portions throughout the figures thereof and wherein:

FIGURE 1 is a perspective fragmentary view, partly in section, of a portion of a lithographic master in accordance with the invention prior to preparation thereof;

FIGURE 2 is a view similar to FIGURE 1 of a prepared lithographic master prior to processing thereof;

FIGURE 3 is a view showing a first step of a method of processing the master of FIGURE 1;

FIGURE 4 is a view showing the master of FIGURE 1 after a second step of processing thereof;

FIGURE 5 is a view showing another step in the processing of the master of FIGURE 1;

FIGURE 6 is a view showing a completed lithographic master prepared in accordance with the invention; and

FIGURE 7 is a schematic view showing a method and apparatus for utilizing a lithographic master in accordance with the invention.

The invention generally encompasses a lithographic master and process for preparing the same in such a manner as to make it omni-ink receptive or oleo-hydrophilic over a first portion thereof, discriminatively receptive or oleophilic-hydrophobic over a second portion thereof and omni-repellant or oleo-hydrophobic over a remaining third portion thereof.

It should be noted here that, as an example of one of the methods of practicing this invention, oil- and water-base inks are used as the printing medium. The basic characteristic of these two bases, utilized in this invention, is that they can both be attracted to one type of surface (i.e. oleo-hydrophilic), both repelled by another type of surface (oleo-hydrophobic) or selectively attracted or repelled by another type of surface (oleophilic-hydrophobic) and they are mutually incompatible or repellant to one another. It should be understood, however, that any other bases exhibiting these same properties may be used for the purposes of this invention either with the enumerated substrates or with one another as desired. For this purpose the broader terms omni-receptive, omni-repellant and selectively repellant are used in conjunction or interchangeably with oleo-hydrophilic, oleo-hydrophobic and oleophilic-hydrophobic respectively throughout the specification and it should therefore be noted here that such use is not therefore limited to water-oil bases alone.

In use the master is contacted with two different base inks, first with a first base ink or dye which has properties such that it adheres only to the first portion of the master, the base thereof being further repellant to the base of the second ink. The master is then contacted with the second base ink or dye, the base thereof being such that it adheres only to the second portion of the master, the first

portion of the master being repellant thereto once it is coated with the first base ink. The image is then transferred to the surface to be printed for simultaneous deposition of the two inks.

Referring now to FIGURE 1 of the drawings, an unprepared portion of a master lithographic form substrate **12**, according to the precepts of this invention, is shown partly in section, the substrate having an upper surface portion **14** at least the upper portion of which being composed of a material having the property which renders it omni-repellant or repellant to all inks or dyes, regardless of base or composition thereof, so long as said portion is in a smooth surface condition. The same surface, however, in an etched condition is omni-attractive or attractive to all inks or dyes regardless of base or composition thereof. Polytetrafluoroethylene film or Teflon is an example of material having the above-stated capabilities and is preferred material for use with this invention. The entire substrate **12** may be formed of this material or the material may be deposited, laminated or coated on some common base material in any suitable manner so that at least the surface **14** thereof is provided with a material having the desired properties.

With reference now to FIGURE 2, an unprocessed, lithographic master prepared in accordance with the teachings of this invention is shown generally at **16***a*. The master consists of the substrate **12** having an etched upper surface **14***a* which is coated with a resist material **18**.

It should be noted, as will be described in more detail below, that the following specific process constitutes only one of several methods which may be followed to produce the final article of this invention from the basic substrate of FIGURE 1. The surface **14***a* is etched by any suitable mechanical, chemical or other treatment such for example as by immersion in a chemical which attacks the surface (e.g. metallic sodium and anhydrous ammonia in the case of Teflon), by electronic bombardment (e.g. corona discharge in the case of Teflon). In the embodiment specifically described the entire surface **14** of the substrate **12** is etched preferably by immersion in a solution of metallic sodium and anhydrous ammonia or by exposure to corona discharge. The etched surface is then coated with the resist material **18**. Although there are many resist materials common in the art suitable for use here, it has been found that a light-sensitive abumin is particularly suited for the purposes of this invention. The properties of the coating material should be such that the coating is soluble in a water solution prior to exposure to light, insoluble to the solution after exposure and is repellant to water or oleophobic and receptive to oil or oleophilic at least in its insoluble condition.

The second step of the process is shown in FIGURE 3 and involves disposing a negative, generally shown at **20**, over the master **16***a* of FIGURE 1. The negative is provided with a translucent or transparent area **22** in the form of the letter T the remaining area **24** being opaque so that, on exposure of the laminate to a light source **26**, the coating **18** subjacent the translucent or transparent area **22** is exposed, thereby becoming insoluble. The remaining portion of the coating under the opaque area **24** of the negative **22** remains soluble. The master is then contacted by a suitable solution to remove the still-soluable portion of the coating **18** so that, as shown in FIGURE 4, them aster **16***c* then consists of a substrate **12** having an etched oleo-hydrophilic surface portion **14***a* and a coated oleophilic-hydrophobic surface portion **18** in the form of the letter T. (In FIGURE 4 as well as in FIGURE 6, the letter T is shown raised above the surface of the plate. This showing is grossly exaggerated for illustrative purposes because although it is slightly raised the amount is not visible or detectable by ordinary measuring means.)

Another property of Teflon which has been found to be useful in this invention, is its ability to convert to a smooth surface condition from an etched surface condition by exposure to ultraviolet light. By the use of ultraviolet light then, etched surfaces of the substrate can be destroyed producing a smooth omni-repellant surface in the areas exposed to ultraviolet light.

In FIGURE 5, a second negative **28**, having first and second ultraviolet opaque areas **30** and **32** and a remaining area **34** which is translucent or transparent to ultraviolet light, is disposed over the master **16***c* of FIGURE 4. The opaque areas **32** represent portions of a design or other suitable configurations disposed relative to area **30** as desired. The laminate of FIGURE 5 is then exposed to a source of ultraviolet light **36** for a time sufficient to remove the etched surfaces from the substrate **12** subjacent the ultraviolet translucent areas **34** of the negative **28**.

As shown in FIGURE 6, the resultant master **16***d* then has a first etched portion **14***a* which is omni-receptive to any ink or in the case of oil and water base inks, olehydrophilic; a second coated portion **18** selectively or discriminately receptive or, in the case of oil and water base inks, receptive to oil-base ink but repellant to water-base ink (oleophilic-hydrophobic) and the remaining or third smooth portion **14** which is omni-repellant to any ink or oleo-hydrophobic.

In FIGURE 7, a method and apparatus for utilizing the master of FIGURE 6 is illustrated schematically. When used with the master of this invention and with inks of different bases and different colors, this apparatus will simultaneously print two colors. The device comprises a plate roll **38** which engages a transfer roll **40**, the transfer roll in turn working against an impression roll **42**. Each roll rotates in the direction indicated by the arrows. The material **44** to be printed is passed between the rolls **40** and **42** in the direction shown by the arrows. A first and second ink reservoir **46** and **48**, containing a first water base ink and a second oil base ink respectively, are disposed proximate the plate roll **38**. A first and second series of ink pick-up and distributing rolls **50** and **52** are provided to furnish means to transfer the ink from the reservoirs to the plate roll. The master **16***d* is attached to the plate roll **38** in any suitable fashion.

In operation, the rolls are rotated in the direction indicated and the master **16***d* is contacted first by the distributing roll of the water base ink **50** and a film of water base ink is deposited only on the first or oleo-hydrophilic portion of the master form. This first portion thereby becomes oleophobic since the water-base ink film will repel oil. On subsequent contact of the master with the second oil base ink distributing roller of the rollers **52**, the oil-base ink is deposited only on the second or oleophilic portion of the master. The compound oil and water base ink image is then transferrd to the transfer roll **40** from whence it is deposited simultaneously on the material **44** to be printed. If the water and oil base inks are of different colors, the two color printing on any desired background color is thereby achieved in a single impression.

It is therefore obvious that with little alteration, a single-color press may be converted to a two-color press or the capability of a multicolor press may be doubled by incorporating the teachings of this invention. Two-color printing is achieved with essentially the same equipment heretofore necessary for single color printing and the problems of registration of colors are eliminated or halved as the case may be. In addition, the use of the conventional water roller section of the standard offset press can be eliminated if the Teflon roll has only been exposed once to ultra violet radiation.

The master form of this invention can be obviously produced by methods other than those specifically described. For example, the steps outlined above may be interchanged by first selectively etching only desired surface portions of the substrate **14**, coating with a resist material, exposing desired portions of the coated surface

to light and then removing the unexposed portion in the usual manner. This process could eliminate the ultraviolet exposure step described above. Selective etching of the substrate may be accomplished by chemical etching or by the use of a corona discharge opaque negative in the case of corona discharge etching. The necessity of using a resist material and the attendant elimination of the light exposure step could be achieved by applying or removing an insoluble and oleophilic-hydrophobic coating to or from desired portions of selectively etched portions of the substrate. Obviously, many similar variations in the practice of the invention could be incorporated in light of the above teachings and what has been specifically set forth is intended to be illustrative and will enable those skilled in the art to practice this invention. It should therefore be understood that, within the scope of the appended claims, the invention may be practiced otherwise than as specifically described.

Applicant claims the benefit of a full range of equivalents within the scope of the appended claims.

I claim:

1. The method of making a two-color lithographic master from a blank having a smooth polytetrafluoroethylene surface comprising the steps of:

forming a roughened surface on only a portion of said smooth surface; and

coating only a portion of said roughened surface with an oil-attractive and water-repellent material.

2. The method of making a lithographic multi-color master having a plurality of distinct fluid attracting surface properties from a blank having a smooth polytetrafluoroethylene surface comprising the steps of:

forming a roughened surface on a portion of said smooth surface;

coating said roughened surface portion with a light-sensitive resist material which is water-soluble in an unexposed condition and oil-attractive and water-repellent in an exposed condition;

exposing a portion of said coating to light;

washing said coating to remove the soluble portion thereof thereby providing an uncoated roughened surface which is oleo-hydrophilic, a coated surface which is oleophilic-hydrophobic, and a smooth surface which is oleo-hydrophobic on said master.

3. A method of making a lithographic master having a plurality of distinct fluid attracting surface properties comprising the steps of:

forming a roughened surface on a polytetrafluoroethylene substrate;

coating said roughened surface with light-sensitive resist material which is water-soluble in an unexposed condition and oil-attractive and water-repellent in an exposed condition;

exposing a portion of said material to light;

washing the substrate to remove the unexposed portion of said material;

smoothing at least a portion of the roughened surface to thereby provide a lithographic master having a first uncoated roughened surface which is oleo-hydrophilic, a second roughened coated surface which is oelophilic-hydrophobic and a third uncoated smooth surface which is oleo-hydropobic.

4. A method in accordance with claim 3 wherein said roughened surface is formed by etching.

5. A method in accordance with claim 4 wherein said roughened surface is smoothed by exposing the portion to be smoothed to ultraviolet light.

6. A lithographic printing master for multi-color printing comprising:

a substrate including a polytetrafluoroethylene surface having smooth and roughened portions thereon; and

a coating of oil-attractive, water-repellent material disposed on a portion of the roughened portion of said surface.

7. A printing master in accordance with claim 6 wherein said material is a water-insoluble albumin.

8. The method of simultaneously offset printing three-color copy with a lithographic master including at least a polytetrafluoroethylene surface coating having a first smooth oil and water-repellent surface portion, a second water-receptive roughened surface portion and a third oil-attractive water-repellent coated surface portion comprising:

applying to said master a water based ink of a first color;

subsequently applying to said master an oil based ink of a second color; and

simultaneously transferring said inks from said master to a surface of a material to be printed, said surface being of a third color to thereby produce three-color copy.

9. A method of making two-color lithographic master from a blank having a smooth polytetrafluoroethylene surface comprising the steps of:

forming a roughened surface on said blank;

coating said roughened surface with a light-sensitive albumin;

masking a portion of said alubumin and exposing said albumin to light to render the portion of said albumin exposed to light insoluble and water-repellent;

washing to remove the unexposed portion of said albumin;

masking a portion of said blank to leave at least a portion of the roughened surface exposed;

and exposing said blank to ultraviolet light to smooth the exposed roughened surface.

References Cited

UNITED STATES PATENTS

2,750,881	6/1956	Geese	101—149.2
3,213,787	10/1965	Miller	101—211

OTHER REFERENCES

Inland Printer, vol. 82, No. 6, p. 28, March 1929.

DAVID KLEIN, *Primary Examiner.*

ROBERT E. PULFREY, *Examiner.*

J. A. BELL, *Assistant Examiner.*