Oct. 9, 1928. 1,686,506

S. ANTHONY

PUSH BUTTON

Filed Jan. 3, 1922

Fig. 1

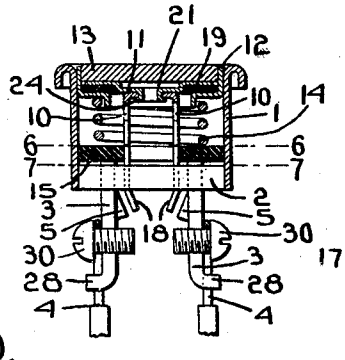

Fig. 2

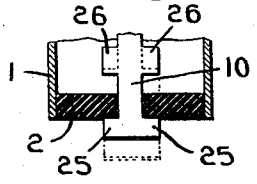

Fig. 5.

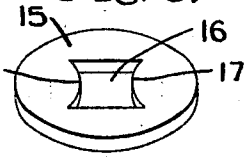

Fig. 3.

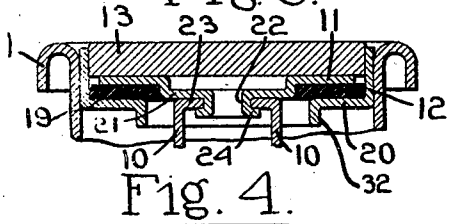

Fig. 6.

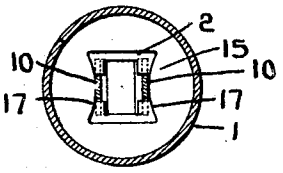

Fig. 4.

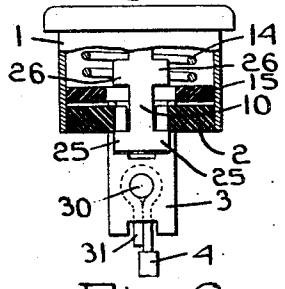

Fig. 7.

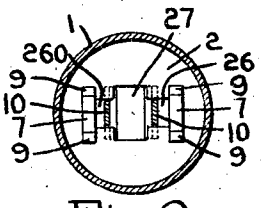

Fig. 8.

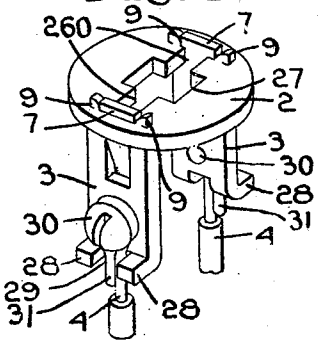

Fig. 9.

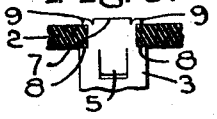

Inventor.
Stanley Anthony
by Heard Smith Hammond
Attys.

Patented Oct. 9, 1928. 1,686,506

UNITED STATES PATENT OFFICE.

STANLEY ANTHONY, OF BOSTON, MASSACHUSETTS.

PUSH BUTTON.

Application filed January 3, 1922. Serial No. 526,641.

This invention relates to push buttons and has for its object to provide an improved push button which is relatively simple in construction, which can be easily assembled, and which has other advantageous features all as will be more fully hereinafter set forth.

In order to give an understanding of the invention I have illustrated in the drawings a selected embodiment thereof which will now be described after which the novel features will be pointed out in the appended claims.

In the drawings, Fig. 1 is a sectional view of a push button embodying my invention.

Fig. 2 is a fragmentary sectional view showing the way in which the stops on the contact fingers co-operate with the base to limit the movement of the button.

Fig. 3 is an enlarged sectional view through the outer end of the push button.

Fig. 4 is a view with a portion shown in section on the line 4, Fig. 1.

Fig. 5 is a perspective view of the confiner member.

Fig. 6 is a perspective section on the line 6—6, Fig. 1.

Fig. 7 is a perspective section on the line 7—7, Fig. 1.

Fig 8 is perspective view of the base member with the terminals attached thereto.

Fig. 9 is a sectional view showing the manner of connecting the terminals to the base plate.

My improved push button comprises a shell 1 of metal which encloses the various parts of the device and which is set into the wall or block or other member that supports the push button. At the inner end of the shell 1 is a base member 2 of insulating material which carries the two terminals 3 to which the circuit wires 4 are connected. These terminals 3 are formed with contact portions 5 which are engaged by the contact fingers of the push button.

The terminals 3 are secured directly to the base member 2, and this is accomplished herein by forming the base member with two apertures 6 therethrough through which the upper ends 7 of the terminals 3 extend.

The upper end 7 of each terminal is reduced in width thereby forming the shoulders 8 which engage the under side of the base member 2 and the terminal is locked in position by swedging over the corners of the upper end of the terminals, as shown at 9.

The contact fingers of the push button are indicated at 10 and they extend through an opening in the base member 2, and are connected to a disk 11 which is retained in a sheath 12 that is slidably mounted in the front end of the shell 1. This sheath 12 is made of metal pressed into the desired shape and it receives not only the finger-supporting disk 11 but also the pearl button 13, the latter fitting tightly into the sheath 12 and being retained therein in any suitable way.

14 indicates the spring which normally holds the push button 13 in retracted position and the fingers 10 out of engagement with the contacts 5. This spring 14 is received between the sheath 12 and a confiner disk 15 of insulating material which is situated directly above the base plate 2. The function of the confiner plate 15 is to hold the fingers 10 properly centered when the button 13 is in its retracted position and thus prevent accidental engagement between the fingers and the contacts 5. This confiner disk is fixedly mounted in the shell 1 and is formed with a central opening 16 through which the contact fingers 10 extend, said opening preferably being provided with the convex faces 17 which engage the fingers 10. The size of this opening 16 is such that when the parts are in their retracted position, shown in Fig. 1, the fingers 10 are prevented from separating from each other to such an extent as to engage the contact faces 5. The inner ends of the fingers 10 are bent inwardly slightly as shown at 18 to form contact portions which engage the contacts 5 when the button 13 is depressed.

It is necessary that the fingers 10 should be completely insulated from the sheath 12 and from the shell 1 and I accomplish this herein by a disk 19 of insulating material which is situated within the sheath 12 and between the bottom 20 thereof and the disk 11. The disk 11 has a smaller diameter than the interior of the sheath 12 thereby leaving a space between the periphery of the disk and the wall of the sheath, and to hold the disk 11 properly centered, the central portion is depressed as shown at 21 and the disk 19 is provided with a central aperture to receive this depressed portion. The button 13 is usually of some insulating material so that with this construction the contact fingers 10 are thoroughly insulated from the sheath and shell.

The fingers 10 may be secured to the disk 11 in any suitable way. One convenient way is to form the disk 11 with a central boss 22, and

to make the two fingers 10 from a single strip of metal bent into U-shape, the bridge or connecting portion 23 having an opening to receive the boss 22, which is then headed or spun over, as shown at 24, thereby rigidly securing the fingers 10 to the disk 11.

The fingers 10 are provided with stops which co-operate with the base 2 to limit their movement in both directions. Each finger is formed at its lower end with wings or extensions 25 which are situated beneath the base member 2, and with other wings or extensions 26 situated above the base member.

The opening in the base plate 2 through which the fingers 10 extend is provided with the two portions 26 which are of a width corresponding to the width of the portion of the fingers between the stops and is also provided with a central portion 27 which is of a width sufficient to permit the wings 25 to pass therethrough. This construction is for the purpose of facilitating the assembling of the parts. For after the fingers have been connected to the disk 11 and the latter placed in the sheath 12 with the insulating disk 19, then the fingers may be inserted through the aperture 16 in the confiner ring 15 and by pressing the fingers 10 toward each other the wings 25 are brought together so that they may be inserted through the enlarged portion 27 of the opening in the base member. When this is done and pressure is relieved on the fingers they will spread apart as far as permitted by the confiner ring 15 and will occupy the narrow portions 260 of the opening in the base, as shown in Fig. 7. When in this position the stops 26 co-operate with the upper face of the base plate 2 to limit the inward movement of the button and the stops 25 co-operate with the under face of said base plate to limit the spring-impelled retractive movement of said button.

The contact portions 5 of the terminals may conveniently be made by striking up a portion of the terminal. The lower end of each terminal is shown as having two projections 28 extending therefrom, said projections of each terminal forming between them a space 29 to receive the end of the circuit wire 4. The circuit wire is attached to the terminals by means of a binding screw 30 and in accomplishing this the screw 30 is loosened and the wire is looped about the screw with the end 31 of the wire passing down through the space 29 as best seen in Fig. 8. The two projections 28 serve to hold the wire from slipping while the screw is tightened so that in tightening the screw there will be no danger that the wire will be crowded out from under the head of the screw.

The sheath 12 is provided with a circular depending flange 32, the purpose of which is to act as a means for positioning the spring 14. It will be noted that the upper end of the spring encircles this flange 32 and the latter serves to hold the spring properly centered so that the turns thereof will be maintained properly spaced from the projections 26 of the contacts.

While I have illustrated herein a selected embodiment of the invention I do not wish to be limited to the constructional features shown.

I claim.

1. In a push button, the combination with a shell, of a base member of insulating material situated within and anchored to the shell, said base member having an opening, each end of which is formed with a widened portion, a button element movably mounted in the shell, a spring acting against the button element and tending to hold it in retracted position, two terminals, each having one end occupying and anchored in one of the widened portions of said opening, and each extending from the base member in a direction at substantially right angles thereto, a binding screw carried by each terminal adjacent its free end, each terminal having a contact portion struck up therefrom at a point between the base member and the binding screw, two resilient contacts connected to the button element and extending entirely through the base member when the button is in its retracted position, each contact having two stop shoulders, one co-operating with the bottom face of the base member to limit the spring-impelled movement of the button and the other co-operating with the top face of the base member to limit the depressing movement thereof.

2. In a push button, the combination with a shell, of a base member of insulating material anchored therein, two terminals carried by said base member, a button element movably mounted in the shell, two contacts associated therewith and extending through the base member, and a spring tending to hold the button element in retracted position, each contact having two stop shoulders, one co-operating with the under side of the base member to limit the spring-impelled movement of the button, and the other co-operating with the top of the base member to limit the depressing movement of the button.

3. In a push button, the combination with a shell, of a base member carried thereby, two terminals carried by the base member, each terminal having an inwardly-extending contact struck up therefrom and formed at its end with two spaced outwardly extending lateral projections, and a binding screw carried by each terminal above said projections whereby the end of the circuit wire which is looped about the binding screw may be retained between said projections.

4. In a push button, the combination with a shell, of a base member of insulating material anchored therein, said base member having an elongated opening two terminals se-

cured to said base member at the ends of the opening and each having a contact portion, a button element slidably mounted in the shell, a pair of resilient contacts carried thereby and extending through the opening in the base member and adapted to engage the contact portion of the terminals when the button is depressed, and a confiner disk separate from the base member and situated in the shell through which the contacts extend, said confiner disk serving to limit the movement of said contacts away from each other.

5. In a push button, the combination with a shell, of a base of insulating material anchored therein, two terminals carried thereby, each having a contact portion, a cup-shaped sheath slidably mounted in the shell and having a central opening, an insulating disk in said sheath and also having a central opening, a contact-supporting disk resting on the insulating disk and having a depressed portion entering the opening thereof whereby the contact-supporting disk is held properly centered, and two contacts secured to said contact-supporting disk.

6. In a push button, the combination with a shell, of a base member carried thereby, two terminals secured to the base member, each terminal having a contact associated therewith, the ends of the terminals being bifurcated and the bifurcated portions bent laterally to form spaced projections between which the circuit wire is received, a binding screw carried by each terminal above said projection and to which the circuit wire is attached, the projections on each terminal embracing the portion of the circuit wire leading to the binding screw, a button element slidably mounted in the shell, and a pair of resilient contacts carried by the button element and adapted to engage the contacts of the terminals.

7. In a push button, the combination with a shell, of a base member carried thereby, two terminals carried by the base member, each terminal having a portion struck up therefrom to form a contact and also having a bifurcated end with the bifurcations bent laterally to form lateral projections, a binding screw carried by each terminal above said projections, whereby the portion of each circuit wire which leads to the screw is confined between the projections, a button element slidably mounted in the shell and a pair of resilient contacts carried thereby and adapted to engage the contact portion of the terminals.

8. In a push button, the combination with a shell, of terminals carried thereby and having contact portions, a sheath slidably mounted in the shell and having a central opening and a circular depending flange, a button in said sheath, resilient contacts associated with the button, a spring for holding the button yieldingly in retracted position, said spring encircling said flange and being positioned thereby.

In testimony whereof, I have signed my name to this specification.

STANLEY ANTHONY.