(12) INTERNATIONAL APPLICATION PUBLISHED UNDER THE PATENT COOPERATION TREATY (PCT)

(19) World Intellectual Property Organization
International Bureau

(43) International Publication Date
2 October 2003 (02.10.2003)

PCT

(10) International Publication Number
WO 03/081135 A1

(51) International Patent Classification[7]: F23D 14/08, F23C 9/08

(21) International Application Number: PCT/US03/08056

(22) International Filing Date: 14 March 2003 (14.03.2003)

(25) Filing Language: English

(26) Publication Language: English

(30) Priority Data:

60/365,224	16 March 2002 (16.03.2002)	US
60/365,139	16 March 2002 (16.03.2002)	US

(63) Related by continuation (CON) or continuation-in-part (CIP) to earlier applications:

US	60/365,113 (CON)
Filed on	16 March 2002 (16.03.2002)
US	60/365,224 (CON)
Filed on	16 March 2002 (16.03.2002)

(71) Applicant *(for all designated States except US)*: **EXXONMOBIL CHEMICAL PATENTS, INC.** [US/US]; 5200 Bayway Drive, Baytown, TX 77520-5200 (US).

(72) Inventors; and

(75) Inventors/Applicants *(for US only)*: **STEPHENS, George** [US/US]; 18930 Timber Way Drive, Humble, TX 77346 (US). **SPICER, David, B.** [US/US]; 5319 Del Monte Drive, Houston, TX 77056 (US).

(74) Agents: **LOMAS, Lucinda**; ExxonMobil Chemical Company, Law Technology, P.O. Box 2149, Baytown, TX 77522-2149 et al. (US).

(81) Designated States *(national)*: AE, AG, AL, AM, AT, AU, AZ, BA, BB, BG, BR, BY, BZ, CA, CH, CN, CO, CR, CU, CZ, DE, DK, DM, DZ, EC, EE, ES, FI, GB, GD, GE, GH, GM, HR, HU, ID, IL, IN, IS, JP, KE, KG, KP, KR, KZ, LC, LK, LR, LS, LT, LU, LV, MA, MD, MG, MK, MN, MW, MX, MZ, NO, NZ, OM, PH, PL, PT, RO, RU, SC, SD, SE, SG, SK, SL, TJ, TM, TN, TR, TT, TZ, UA, UG, US, UZ, VC, VN, YU, ZA, ZM, ZW.

[Continued on next page]

(54) Title: BURNER DESIGN WITH HIGHER RATES OF FLUE GAS RECIRCULATION AND REDUCED NOx EMISSIONS

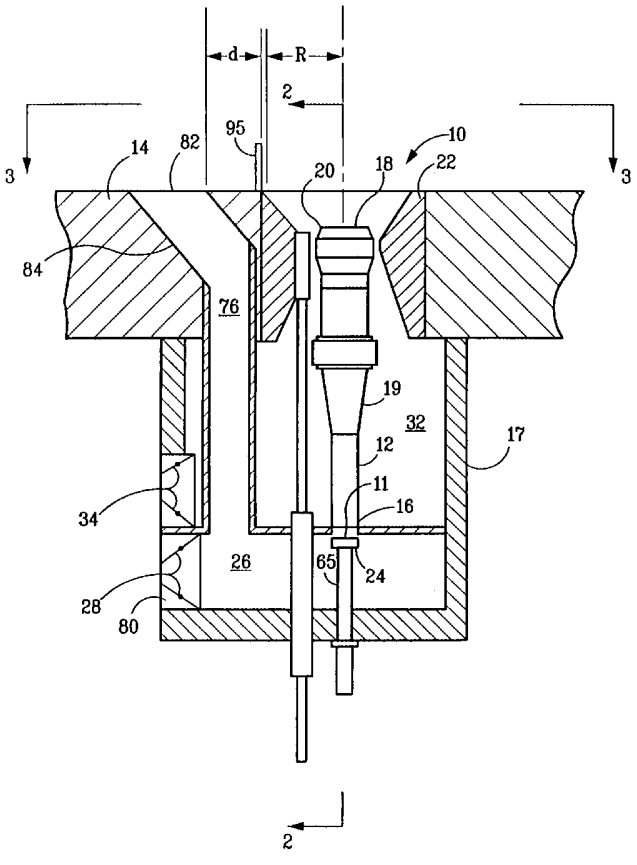

(57) Abstract: A burner for use in furnaces such as in steam cracking. The burner is located within a first flame opening in a furnace and includes a primary air chamber (26), a burner tube (12) including a downstream end (18), an upstream end (16) in fluid communication with the primary air chamber and a burner tip (20) mounted on the downstream end of the burner tube and directed to the first flameopening in the furnace so that combustion of the fuel takes place downstream of the burner tip, at least one flue gas recirculation duct (76) having a first end at a second opening (82) in the furnace and a second end opening into the primary air chamber, and a wall (95) extending into the furnace between the first flame opening and the first end of the flue gas recirculation duct to substantially lengthen a flow path therebetween and thereby providing a substantial barrier to flow.

WO 03/081135 A1

(84) Designated States *(regional)*: ARIPO patent (GH, GM, KE, LS, MW, MZ, SD, SL, SZ, TZ, UG, ZM, ZW), Eurasian patent (AM, AZ, BY, KG, KZ, MD, RU, TJ, TM), European patent (AT, BE, BG, CH, CY, CZ, DE, DK, EE, ES, FI, FR, GB, GR, HU, IE, IT, LU, MC, NL, PT, RO, SE, SI, SK, TR), OAPI patent (BF, BJ, CF, CG, CI, CM, GA, GN, GQ, GW, ML, MR, NE, SN, TD, TG).

Declarations under Rule 4.17:

— *as to applicant's entitlement to apply for and be granted a patent (Rule 4.17(ii)) for the following designations AE, AG, AL, AM, AT, AU, AZ, BA, BB, BG, BR, BY, BZ, CA, CH, CN, CO, CR, CU, CZ, DE, DK, DM, DZ, EC, EE, ES, FI, GB, GD, GE, GH, GM, HR, HU, ID, IL, IN, IS, JP, KE, KG, KP, KR, KZ, LC, LK, LR, LS, LT, LU, LV, MA, MD, MG, MK, MN, MW, MX, MZ, NO, NZ, OM, PH, PL, PT, RO, RU, SC, SD, SE, SG, SK, SL, TJ, TM, TN, TR, TT, TZ, UA, UG, UZ, VC, VN, YU, ZA, ZM, ZW, ARIPO patent (GH, GM, KE, LS, MW, MZ, SD, SL, SZ, TZ, UG, ZM, ZW), Eurasian patent (AM, AZ, BY, KG, KZ, MD, RU, TJ, TM), European patent (AT, BE, BG, CH, CY, CZ, DE, DK, EE, ES, FI, FR, GB, GR, HU, IE, IT, LU, MC, NL, PT, RO, SE, SI, SK, TR), OAPI patent (BF, BJ, CF, CG, CI, CM, GA, GN, GQ, GW, ML, MR, NE, SN, TD, TG)*

— *as to the applicant's entitlement to claim the priority of the earlier application (Rule 4.17(iii)) for the following designations AE, AG, AL, AM, AT, AU, AZ, BA, BB, BG, BR, BY, BZ, CA, CH, CN, CO, CR, CU, CZ, DE, DK, DM, DZ, EC, EE, ES, FI, GB, GD, GE, GH, GM, HR, HU, ID, IL, IN, IS, JP, KE, KG, KP, KR, KZ, LC, LK, LR, LS, LT, LU, LV, MA, MD, MG, MK, MN, MW, MX, MZ, NO, NZ, OM, PH, PL, PT, RO, RU, SC, SD, SE, SG, SK, SL, TJ, TM, TN, TR, TT, TZ, UA, UG, UZ, VC, VN, YU, ZA, ZM, ZW, ARIPO patent (GH, GM, KE, LS, MW, MZ, SD, SL, SZ, TZ, UG, ZM, ZW), Eurasian patent (AM, AZ, BY, KG, KZ, MD, RU, TJ, TM), European patent (AT, BE, BG, CH, CY, CZ, DE, DK, EE, ES, FI, FR, GB, GR, HU, IE, IT, LU, MC, NL, PT, RO, SE, SI, SK, TR), OAPI patent (BF, BJ, CF, CG, CI, CM, GA, GN, GQ, GW, ML, MR, NE, SN, TD, TG)*

Published:

— *with international search report*

— *before the expiration of the time limit for amending the claims and to be republished in the event of receipt of amendments*

For two-letter codes and other abbreviations, refer to the "Guidance Notes on Codes and Abbreviations" appearing at the beginning of each regular issue of the PCT Gazette.

BURNER DESIGN WITH HIGHER RATES OF FLUE GAS RECIRCULATION AND REDUCED NO_x EMISSIONS

[0001] This invention relates to improvements in burners such as those employed in high temperature furnaces for use in the steam cracking of hydrocarbons. More particularly, the invention relates to low NO_x FGR burners with higher flue gas recirculation rates.

[0002] As a result of the interest in recent years to reduce the emission of pollutants from burners used in large furnaces and boilers, burner design has undergone substantial change. In the past, improvements in burner design were aimed primarily at improving heat distribution. Increasingly stringent environmental regulations have shifted the focus of burner design to the minimization of regulated pollutants.

[0003] Oxides of nitrogen (NO_x) are formed in air at high temperatures. These compounds include, but are not limited to nitrogen oxide and nitrogen dioxide. Reduction of NO_x emissions is a desired goal to decrease air pollution and meet government regulations. In recent years, a wide variety of mobile and stationary sources of NO_x emissions have come under increased scrutiny and regulation.

[0004] One strategy for achieving lower NO_x emission levels is to install a NO_x reduction catalyst to treat the furnace exhaust stream. This strategy, known as Selective Catalytic Reduction (SCR), is very costly and, although it can be effective in meeting more stringent regulations, it represents a less desirable alternative to improvements in burner design.

[0005] Burners used in large industrial furnaces may use either liquid or gaseous fuel. Liquid fuel burners mix the fuel with steam prior to combustion to atomize the fuel to enable more complete combustion, and mix combustion air with the fuel at the zone of combustion.

[0006] Gas fired burners can be classified as either premix or raw gas, depending on the method used to combine the air and fuel. They also differ in configuration and the type of burner tip used.

[0007] Raw gas burners inject fuel directly into the air stream, such that the mixing of fuel and air occurs simultaneously with combustion. Since airflow does not change appreciably with fuel flow, the air register settings of natural draft burners must be changed after firing rate changes. Therefore, frequent adjustment may be necessary.. In addition, many raw gas burners produce luminous flames.

[0008] Premix burners mix some or all of the fuel with some or all of the combustion air prior to combustion. Since premixing is accomplished by using the energy present in the fuel stream, airflow is largely proportional to fuel flow. As a result, therefore, less frequent adjustment is required. Premixing the fuel and air also facilitates the achievement of the desired flame characteristics. Due to these properties, premix burners are often compatible with various steam cracking furnace configurations.

[0009] Floor-fired premix burners are used in many steam crackers and steam reformers primarily because of their ability to produce a relatively uniform heat distribution profile in the tall radiant sections of these furnaces. Flames are non-luminous, permitting tube metal temperatures to be readily monitored. Therefore, a premix burner is the burner of choice for such furnaces. Premix burners can also be designed for special heat distribution profiles or flame shapes required in other types of furnaces.

[0010] In gas fired industrial furnaces, NO_x is formed by the oxidation of nitrogen drawn into the burner with the combustion air stream. The formation of NO_x is widely believed to occur primarily in regions of the flame where there exist both high temperatures and an abundance of oxygen. Since ethylene furnaces are amongst the highest temperature furnaces used in the hydrocarbon processing industry, the natural tendency of burners in these furnaces is to produce high levels of NO_x emissions.

[0011] One technique for reducing NO_x that has become widely accepted in industry is known as staging. With staging, the primary flame zone is deficient in either air (fuel-rich) or fuel (fuel-lean). The balance of

the air or fuel is injected into the burner in a secondary flame zone or elsewhere in the combustion chamber. As is well known, a fuel-rich or fuel-lean combustion zone is less conducive to NO_x formation than an air-fuel ratio closer to stoichiometry. Staging results in reducing peak temperatures in the primary flame zone and has been found to alter combustion speed in a way that reduces NO_x. Since NO_x formation is exponentially dependent on gas temperature, even small reductions in peak flame temperature dramatically reduce NO_x emissions. However this must be balanced with the fact that radiant heat transfer decreases with reduced flame temperature, while CO emissions, an indication of incomplete combustion, may actually increase as well.

[0012] In the context of premix burners, the term primary air refers to the air premixed with the fuel; secondary, and in some cases tertiary, air refers to the balance of the air required for proper combustion. In raw gas burners, primary air is the air that is more closely associated with the fuel; secondary and tertiary air are more remotely associated with the fuel. The upper limit of flammability refers to the mixture containing the maximum fuel concentration (fuel-rich) through which a flame can propagate.

[0013] Thus, one set of techniques achieves lower flame temperatures by using staged-air or staged-fuel burners to lower flame temperatures by carrying out the initial combustion at far from stoichiometric conditions (either fuel-rich or air-rich) and adding the remaining air or fuel only after the flame has radiated some heat away to the fluid being heated in the furnace.

[0014] Another technique for achieving lower flame temperatures involves diluting the fuel-air mixture with inert material. Flue gas (the products of the combustion reaction) or steam are commonly used diluents. Such burners are classified as FGR (flue-gas-recirculation) or steam-injected, respectively.

[0015] U.S. Patent No. 5,092,761 discloses a method and apparatus for reducing NO_x emissions from premix burners by recirculating flue gas. Flue gas is drawn from the furnace through a pipe or pipes by the

aspirating effect of fuel gas and combustion air passing through a venturi portion of a burner tube. The flue gas mixes with combustion air in a primary air chamber prior to combustion to dilute the concentration of O_2 in the combustion air, which lowers flame temperature and thereby reduces NO_x emissions.

[0016] Analysis of burners of the type described in U.S. Patent No. 5,092,761 has indicated the flue-gas-recirculation (FGR) ratio is generally in the range 5-10% where FGR ratio is defined as:

$$\text{FGR ratio (\%)} = 100[G/(F+A)]$$

where G = Flue-gas drawn into venturi, (lb)

F = Fuel combusted in burner, (lb), and

A = Air drawn into burner, (lb).

[0017] The ability of existing burners of this type to generate higher FGR ratios is limited by the inspirating capacity of the fuel orifice/gas spud/venturi combination. Further closing of the primary air dampers will produce lower pressures in the primary air chamber and thus enable increased FGR ratios. However, when the ratio of FGR is increased, the flame becomes more susceptible to entrainment into the FGR duct, which raises combustion temperature, which, in turn raises NO_x and may cause damage to metal parts.

[0018] Commercial experience and modeling have shown when flue gas recirculation rates are raised, there is a tendency of the flame to be drawn into the FGR duct. Often, it is this phenomenon that constrains the amount of flue gas recirculation. When the flame enters directly into the flue gas recirculation duct, the temperature of the burner venturi tends to rise, which raises flame speed and causes the recirculated flue gas to be less effective in reducing NO_x. From an operability perspective, the flue gas recirculation rate needs to be lowered to keep the flame out of the FGR duct to preserve the life of the metallic FGR duct.

[0019] Therefore, what is needed is a burner for the combustion of fuel wherein the amount of FGR can be increased without the problems associated with flame entrainment into the FGR duct, yielding further reductions in NO_x emissions.

[0020] The present invention relates to a burner for use in furnaces such as in steam cracking. The burner is located within a first flame opening in a furnace and includes a primary air chamber, a burner tube including a downstream end, an upstream end in fluid communication with the primary air chamber and a burner tip mounted on the downstream end of the burner tube and directed to the first flame opening in the furnace so that combustion of the fuel takes place downstream of the burner tip, at least one flue gas recirculation duct having a first end at a second opening in the furnace and a second end opening into the primary air chamber, and a wall extending into the furnace between the first flame opening and the first end of the flue gas recirculation duct to substantially lengthen a flow path therebetween and thereby providing a substantial barrier to flow

[0021] In addition to the use of a wall as described above, the present invention effectively moves the entrance of the FGR duct opening further away from the flame to avoid or at least minimize flame entrainment. Therefore, the amount of flue gas recirculation can be increased to reduce overall flame temperature and therefore reduce NO_x production.

[0022] The invention is further explained in the description that follows with reference to the drawings illustrating, by way of non-limiting examples, various embodiments of the invention wherein:

FIG. 1 illustrates an elevation partly in section of an embodiment of the burner in accordance with the present invention;

FIG. 2 is an elevation partly in section taken along line 2--2 of FIG. 1;

FIG. 3A is a plan view taken along line 3--3 of FIG. 1;

FIG. 3B illustrates an alternate embodiment of the present invention employing a curved wall as opposed to the straight wall in FIG. 3A;

FIG. 4 illustrates an elevation partly in section of another embodiment of the burner with a separation wall in accordance with the present invention;

FIG. 5 is an elevation partly in section taken along line 5--5 of FIG. 4;

FIG. 6 is a plan view taken along line 6--6 of FIG. 4;

FIG. 7 is a perspective view of a separation wall in accordance with the instant invention;

FIG. 8 is an elevation view of an embodiment of the present invention employing external FGR;

FIG. 9 is a plan view of an embodiment of the present invention employing external FGR;

FIG. 10 illustrates an elevation partly in section of an embodiment of a flat-flame burner of the present invention;

FIG. 11 is an elevation partly in section of the embodiment of a flat-flame burner of FIG. 10 taken along line 11-11 of FIG. 10;

FIG. 12 illustrates an elevation partly in section of another embodiment of a flat-flame burner of the present invention; and

FIG. 13 is an elevation partly in section of the embodiment of a flat-flame burner of FIG. 12 taken along line 13--13 of FIG. 12.

DETAILED DESCRIPTION OF THE PREFERRED EMBODIMENTS

[0023] Although the present invention is described in terms of a burner for use in connection with a furnace or an industrial furnace, it will be apparent to one of skill in the art that the teachings of the present invention also have applicability to other process components such as, for example, boilers. Thus, the term furnace herein shall be understood to mean furnaces, boilers and other applicable process components.

[0024] Referring to FIGS. 1-3, a burner 10 includes a freestanding burner tube 12 located in a well in a furnace floor 14. The burner tube 12 includes an upstream end 16, a downstream end 18 and a venturi portion 19. A burner tip 20 is located at the downstream end 18 and is

surrounded by an annular tile 22. A fuel orifice 11, which may be located within gas spud 24 is at the top end of a gas fuel riser 65 and is located at the upstream end 16 and introduces fuel into the burner tube 12. Fresh or ambient air is introduced into a primary air chamber 26 through opening 80 through an adjustable damper 28 to mix with the fuel at the upstream end 16 of the burner tube 12 and pass upwardly through the venturi portion 19. Combustion of the fuel and fresh air occurs downstream of the burner tip 20.

[0025] A plurality of air ports 30 (FIGS. 2 and 3A and 3B) originate in a secondary air chamber 32 and pass through the furnace floor 14 into the furnace. Fresh or ambient air enters the secondary air chamber 32 through adjustable dampers 34 and passes through the staged air ports 30 into the furnace to provide secondary or staged combustion, as described in U.S. Patent No. 4,629,413.

[0026] Unmixed low temperature fresh or ambient air, having entered the secondary air chamber 32 through the dampers 34, and having passed through the air ports 30 into the furnace, is also drawn through a flue gas recirculation (FGR) duct 76 into a primary air chamber 26 by the inspirating effect of the fuel passing through the venturi portion 19. The duct 76 is shown as a metallic FGR duct.

[0027] As shown in FIG. 1, an aspect of the instant invention angles the FGR duct 76 outwardly at 84 such that the opening 82 of the duct 76 is physically further spaced away from the base of the burner tip 20. The angled FGR duct inlet 84 thus avoids or at least reduces the potential for the burner flame to be entrained into the FGR duct 76. This embodiment enables higher flue gas recirculation (FGR) rates to be induced into the burner 10. Such higher FGR rates, in turn, reduce overall flame temperature and NO_x production.

[0028] With reference to FIG. 3A and FIG. 3B, a flame opening 23 is circular and has a radius R, and the distance that the distance (d) that the duct opening 82 is laterally spaced from the flame opening 23 is defined by $d \geq 0.5R$ for avoiding entrainment of the flame into the duct opening 82.

[0029] The angle outward at 84 also permits the continued use of the relatively small burner box 17. It should be noted that such FGR burners may be in the order of 6 feet in height by 3 feet in width.

[0030] Referring to FIGS. 2 and 5, in addition to the use of flue gas as a diluent, another technique to achieve lower flame temperature through dilution is through the use of steam injection. This is accomplished through steam injection tubes 15, which may or may not be present. Steam can be injected in the primary air or the secondary air chamber. Preferably, steam may be injected upstream of the venturi portion 19.

[0031] An optional embodiment of the invention serves to further increase the effective distance between the opening 82 of the FGR duct 76 and the base of the burner flame. In this embodiment, a physical wall 95 is installed between the burner tip 20 and the opening 82 to the FGR duct 76. The wall 95 also avoids or at least reduces the potential for the burner flame to be entrained into the FGR duct 76, and therefore enables higher flue gas recirculation (FGR) rates to be induced into the burner 10. Such higher FGR rates, in turn, reduce overall flame temperature and NO_x production. According to the teachings of the present invention, wall 95 may be straight as shown in FIG. 3A, curved as shown in FIG. 3B or other shapes as would be obvious to one of skill in the art.

[0032] Flue gas containing, for example, 0 to 15% O_2 is drawn from near the furnace floor through the duct 76 with 5 to 15% O_2 preferred, 2 to 10% O_2 more preferred and 2 to 5% O_2 particularly preferred, by the inspirating effect of fuel passing through venturi portion 19 of burner tube 12. In this manner, the primary air and flue gas are mixed in primary air chamber 26, which is prior to the zone of combustion. Therefore, the amount of inert material mixed with the fuel is raised, thereby reducing the flame temperature and, and as a result, reducing NO_x emissions.

[0033] Closing or partially closing damper 28 restricts the amount of fresh air that can be drawn into the primary air chamber 26 and thereby provides the vacuum necessary to draw flue gas from the furnace floor.

[0034] Advantageously, a mixture of from 20% to 80% flue gas and from 20% to 80% ambient air should be drawn through passageway 76. It is particularly preferred that a mixture of 50% flue gas and 50% ambient air be employed. The desired proportions of flue gas and ambient air may be achieved by proper placement and/or design of the duct 76 in relation to the air ports 30. That is, the geometry of the air ports, including but not limited to their distance from the burner tube, the number of air ports, and the size of the air ports, may be varied to obtain the desired percentages of flue gas and ambient air.

[0035] Optionally, one or more steam injection tubes 15 may be provided so as to be positioned in the direction of flow so as to add to the motive force provided by venturi portion 19 for inducing the flow of fuel, steam and flue gas, air and mixtures thereof into the burner tube 12.

[0036] Referring now to FIGS. 4-7, another embodiment of the present invention is discussed. In this embodiment, a burner 10 includes a freestanding burner tube 12 located in a well in a furnace floor 14. The burner tube 12 includes an upstream end 16, a downstream end 18 and a venturi portion 19. A burner tip 20 is located at the downstream end 18 and is surrounded by an annular tile 22. A fuel orifice 11, which may be located in gas spud 24, is at the top end of a gas fuel riser 65 and is located at the upstream end 16 and introduces fuel into the burner tube 12. Fresh or ambient air is introduced into a primary air chamber 26 through an adjustable damper 28 to mix with the fuel at the upstream end 16 of the burner tube 12 and pass upwardly through the venturi portion 19. Combustion of the fuel and fresh air occurs downstream of the burner tip 20.

[0037] A plurality of air ports 30 (FIGS. 5 and 6) originate in a secondary air chamber 32 and pass through the furnace floor 14 into the furnace. Fresh or ambient air enters the secondary air chamber 32 through adjustable dampers 34 and passes through the staged air ports 30 into the furnace to provide secondary or staged combustion, as described in U.S. Patent No. 4,629,413.

[0038] Unmixed low temperature fresh or ambient air, having entered the secondary air chamber 32 through the dampers 34, and having passed through the air ports 30 into the furnace, is also drawn through a passageway 76 into a primary air chamber 26 by the inspirating effect of the fuel passing through the venturi portion 19. The passageway 76 is shown as a metallic FGR duct.

[0039] With reference to FIGS. 4-7, a wall 60 encircles the burner tip 20 mounted on the downstream end 18 of the burner tube 12 to provide a barrier between a base of a flame downstream of the burner tip 20 and both the second opening 76 in the furnace and the at least one air port 30.

[0040] In one embodiment of the present invention, the wall 60 is perforation-free to prevent flow of flue gas and air therethrough. In another embodiment of the instant invention, the wall 60 has a plurality of wall openings 61 spaced therearound. In the embodiment shown, the openings 61 are rectangular in shape, and are located at the base of the wall 60 and spaced around the wall. The advantage achieved by the use of the openings 61 lies in their alignment, which is optimized to reduce the amount of oxygen from the staged air ports 30 that reaches the flame, reducing the level of interaction of oxygen with the flame. As may be appreciated by one skilled in the art, when aligned in this manner, each wall opening is aligned so as to maximize the effective flow path from the air ports to the flame. However, flue gas is permitted to advantageously enter the flame, enabling a reduction in NO_x emission levels.

[0041] In accordance with a preferred embodiment of the present invention, each one of the air ports 30 is positioned between adjacent wall openings 61 to minimize the amount of oxygen flowing from the air ports 30 through the wall openings 61 to the base of the flame.

[0042] Sight and lighting port 50 provides access to the interior of burner 10 for a lighting element (not shown).

[0043] Referring to FIGS. 8 and 9, wherein like numbers refer to like elements, another embodiment of the present invention is illustrated. In this embodiment, the teachings above with respect to the separation wall

and angled duct of the present invention may be applied in connection with a furnace having one or more burners and utilizing an external FGR duct 376 in fluid communication with a furnace exhaust 300. It will be understood by one of skill in the art that several burners 310 may be located within the furnace, all of which may feed furnace exhaust 300 into external FGR duct 376. As may be appreciated, wall 60, encircling the burner tip 20 mounted on the downstream end 18 of the burner tube 12 provides a barrier between a base of a flame at the burner tip 20 and the at least one air port 30.

[0044] Benefits similar to those described above through the use of the flue gas recirculation system of the present invention can be achieved in flat-flame burners, as will now be described by reference to FIGS. 10 through 13. FIGS. 10 and 11 illustrate a flat-flame burner embodiment similar to the novel burner arrangement illustrated in FIG. 1 while FIGS. 12 and 13 illustrate a flat-flame burner embodiment similar to the novel burner arrangement illustrated in FIG. 4.

[0045] A burner 110 includes a freestanding burner tube 112 located in a well in a furnace floor 114. Burner tube 112 includes an upstream end 116, a downstream end 118 and a venturi portion 119. Burner tip 120 is located at downstream end 118 and is surrounded by a peripheral tile 122. A fuel orifice 111, which may be located within gas spud 124 is located at upstream end 116 and introduces fuel into burner tube 112. Fresh or ambient air may be introduced into primary air chamber 126 to mix with the fuel at upstream end 116 of burner tube 112. Combustion of the fuel and fresh air occurs downstream of burner tip 120. Fresh secondary air enters secondary chamber 132 through dampers 134.

[0046] In order to recirculate flue gas from the furnace to the primary air chamber, a flue gas recirculation passageway 176 is formed in furnace floor 114 and extends to primary air chamber 126, so that flue gas is mixed with fresh air drawn into the primary air chamber from opening 180 through dampers 128. Flue gas containing, for example, 0 to 15% O_2 is drawn through passageway 176 by the inspirating effect of fuel passing

through venturi portion 119 of burner tube 112. Primary air and flue gas are mixed in primary air chamber 126, which is prior to the zone of combustion.

[0047] In operation, fuel orifice 111, which may be, located within gas spud 124 discharges fuel into burner tube 112, where it mixes with primary air, recirculated flue-gas or mixtures thereof. The mixture of fuel and recirculated flue-gas, primary air or mixtures thereof then discharges from burner tip 120. The mixture in the venturi portion 119 of burner tube 112 is maintained below the fuel-rich flammability limit; i.e. there is insufficient air in the venturi to support combustion. Secondary air is added to provide the remainder of the air required for combustion. The majority of the secondary air is added a finite distance away from the burner tip 120

[0048] Optionally, one or more steam injection tubes 115 may be provided so as to be positioned in the direction of flow so as to add to the motive force provided by venturi portion 119 for inducing the flow of fuel, steam and flue gas, air and mixtures thereof into the burner tube 112.

[0049] Referring now to FIGS. 10-11, as with a previous embodiment, the FGR duct 176 may be angled outwardly at 184 such that the opening 182 of the duct 176 is physically further spaced away from the base of the burner tip 120. The angled FGR duct inlet 184 thus avoids or at least reduces the potential for the burner flame to be entrained into the FGR duct 176. This enables higher flue gas recirculation (FGR) rates to be induced into the burner 110. Such higher FGR rates, in turn, reduce overall flame temperature and NO_x production.

[0050] The angle outward at 184 also permits the continued use of the relatively small burner box 117. It should be noted that such FGR burners may be on the order of 6 feet in height by 3 feet in width.

[0051] Still referring now to FIGS. 10-11, the benefits of the present invention in connection with a flat-flame burner embodiment may be further enhanced by increasing the effective distance between the opening 182 of the FGR duct 176 and the base of the burner flame. In this embodiment, a physical wall 195 as described above is installed between

the burner tip 120 and the opening 182 to the FGR duct 176. The wall also avoids or at least reduces the potential for the burner flame to be entrained into the FGR duct 176, and therefore enables higher flue gas recirculation (FGR) rates to be induced into the burner 110. Such higher FGR rates, in turn, reduce overall flame temperature and NO_x production.

[0052] In the context of a flat-flame burner embodiment, as represented by FIGS. 12 and 13 (similar to the FIG. 4 embodiment), a wall 160 peripherally surrounds the burner tip 120 mounted on the upstream end 116 of the burner tube 112 to provide a barrier between a base of a flame at the burner tip 120 and both of the second opening 176 in the furnace and the at least one air port (not shown). The wall 160 reduces the amount of oxygen flowing into the base of said flame.

EXAMPLES

Example 1

[0053] To demonstrate the benefits of the present invention, a pre-mix burner employing flue gas recirculation, of the type described in U.S. Patent No. 5,092,761, without a wall encircling the burner tip to provide a barrier between the base of the flame and both the flue gas recirculation duct and the secondary air ports, of the present invention, was operated at a firing rate of 5.8 million BTU/hr., using a fuel gas comprised of 30% H2/70% natural gas. The burner yielded NO_x emissions of 49 ppm.

Example 2

[0054] A wall encircling the burner tip to provide a barrier between the base of the flame and both the flue gas recirculation duct opening and the secondary air ports of the present invention, was installed in the pre-mix burner of Example 1. The burner was operated at a firing rate of 6.135 million BTU/hr., with a fuel gas comprised of 30% H_2/70% natural gas. The NO_x emissions were observed to be 46.11 ppm.

[0055] Computational fluid dynamics modeling and, as indicated above, actual tests on a commercial unit have shown that the existing design, without a wall peripherally surrounding the burner tip, possesses a high concentration oxygen zone in the furnace above the FGR duct(s). It is believed that a part of this oxygen flows into the base of the flame and may be responsible for higher NO_x production as a result of the large amount of oxygen interacting with the flame base. While it is believed that such co-current flow causes good mixing and high combustion rate, higher temperatures and higher levels of NO_x emissions likely result from this effect. In an effort to solve this problem, it has been discovered that the use of a wall, in accordance with the present invention, between the flame and the oxygen recirculation zone can serve to greatly reduce the interaction between the two.

[0056] Although the burners of this invention have been described in connection with floor-fired hydrocarbon cracking furnaces, they may also be used in furnaces for carrying out other reactions or functions.

[0057] It will also be understood that the flue gas recirculation system and methodologies described herein also has utility in raw gas burners having a pre-mix burner configuration wherein flue gas alone is mixed with fuel gas at the entrance to the burner tube. In fact, it has been found that the pre-mix, staged-air burners of the type described in detail herein can be operated with the primary air damper doors closed, with very satisfactory results.

[0058] Although the invention has been described with reference to particular means, materials and embodiments, it is to be understood that the invention is not limited to the particulars disclosed and extends to all equivalents within the scope of the claims.

CLAIMS

What is claimed is:

1. A burner, said burner being located within a first flame opening in a furnace and said burner comprising:

(a) a primary air chamber;

(b) a burner tube including (i) a downstream end, (ii) an upstream end in fluid communication with said primary air chamber, and (iii) a burner tip mounted on the downstream end of said burner tube and directed to the first flame opening in the furnace, so that combustion of the fuel takes place downstream of said burner tip;

(c) at least one flue gas recirculation duct having a first end at a second opening in the furnace and a second end opening into said primary air chamber; and

(d) a wall extending into the furnace between said first flame opening and said first end of said flue gas recirculation duct to substantially lengthen a flow path therebetween and thereby providing a substantial barrier to flow.

2. The burner according to claim 1, further comprising means for drawing flue gas from said furnace through said duct.

3. The burner according to claim 2, wherein said means for drawing flue gas from said furnace comprises a venturi portion in said burner tube.

4. The burner according to any preceding claim, further comprising at least one first adjustable damper opening into said primary

air chamber to restrict the amount of air entering into said primary air chamber, and thereby providing a vacuum to draw flue gas from the furnace.

5. The burner according to any preceding claim, further comprising a secondary air chamber, and at least one second adjustable damper opening into said secondary air chamber to restrict the amount of air entering into said secondary air chamber, said secondary air chamber being in fluid communication with at least one air port .

6. The burner according to claim 5, wherein said secondary air chamber is in fluid communication with a plurality of said at least one air ports.

7. The burner according to any preceding claim, wherein said first end of said at least one flue gas recirculation duct is spaced an effective distance from said first opening for minimizing entrainment of a burner flame into said second opening.

8. The burner according to any preceding claim, wherein said first flame opening is circular and has a radius R, and wherein said distance that said second opening is laterally spaced from said first flame opening is $\geq$ 0.5R for substantially avoiding entrainment of the burner flame into said second opening.

9. The burner according to any preceding claim, wherein said flue gas recirculation duct extends vertically from said primary air chamber and is angled outwardly from said first flame opening at said first end to join with said second opening that is laterally spaced from said first flame opening.

10. The burner according to any preceding claim, wherein said wall peripherally surrounds said burner tip.

11. The burner according to any preceding claim, wherein said wall operates to reduce the amount of oxygen flowing into the base of the flame.

12. The burner according to claim 10, wherein said wall has a plurality of wall openings.

13. The burner according to claim 12, wherein said wall openings are at the base of said wall.

14. The burner according to claim 12, wherein each of said wall openings is aligned so as to maximize the flow path from said air port to the flame, reducing the level of interaction of oxygen with the flame.

15. The burner according to claim 1, wherein said wall extending into the furnace between said first flame opening and said first end of said flue gas recirculation duct is a partial wall.

16. The burner according to claim 15, wherein said partial wall extending into the furnace between said first flame opening and said first end of said flue gas recirculation duct is curved to partially surround said burner tip.

17. The burner according to any preceding claim, wherein the burner is a pre-mix burner.

18. The burner according to any preceding claim, wherein the burner is a flat-flame burner.

19. The burner according to any preceding claim, wherein the furnace is a steam-cracking furnace.

20. The burner according to any preceding claim, further comprising at least one steam injection tube.

FIG. 1

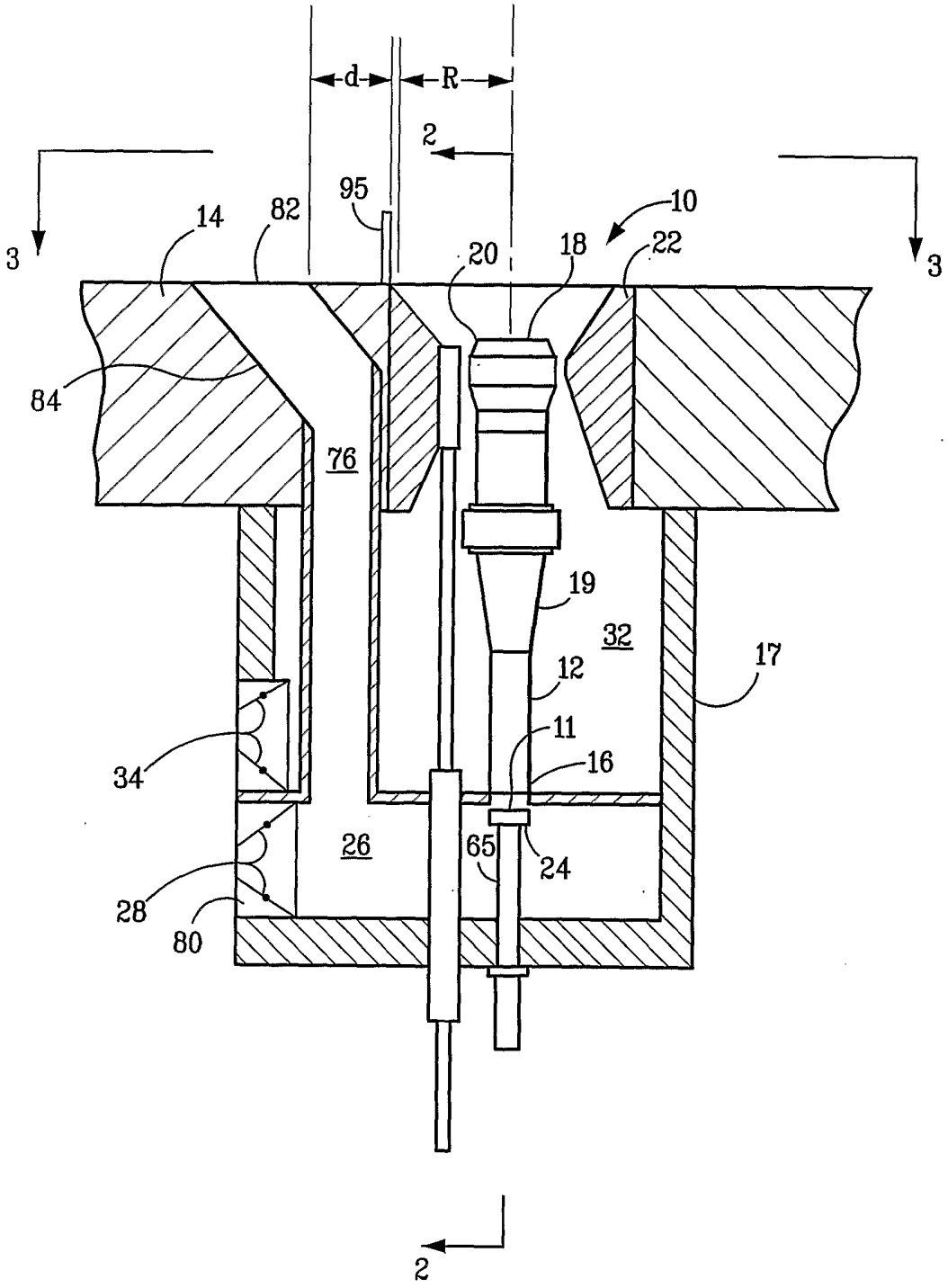

FIG. 2

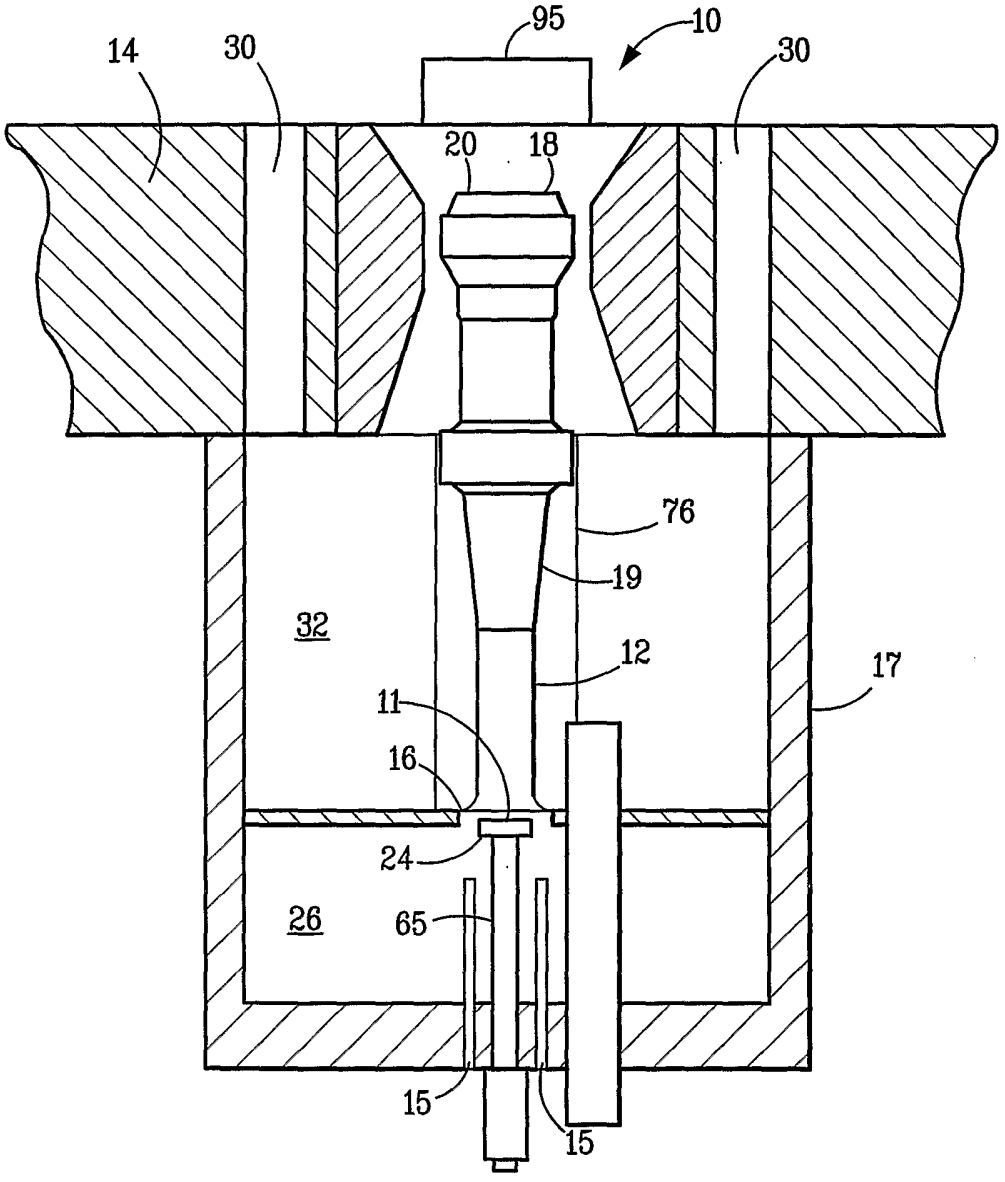

FIG. 3A

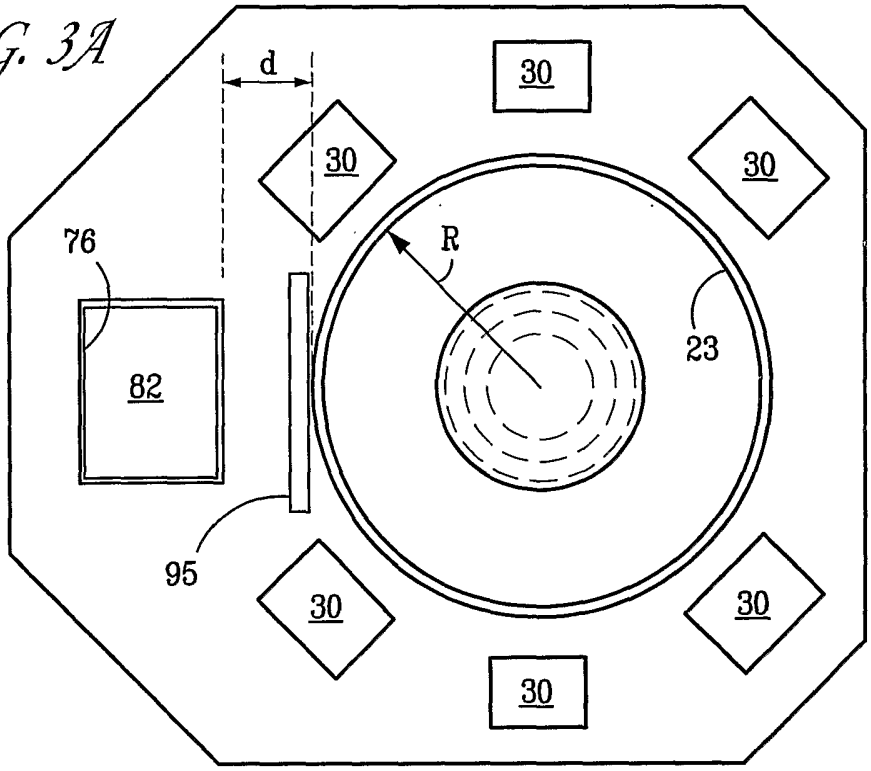

FIG. 3B

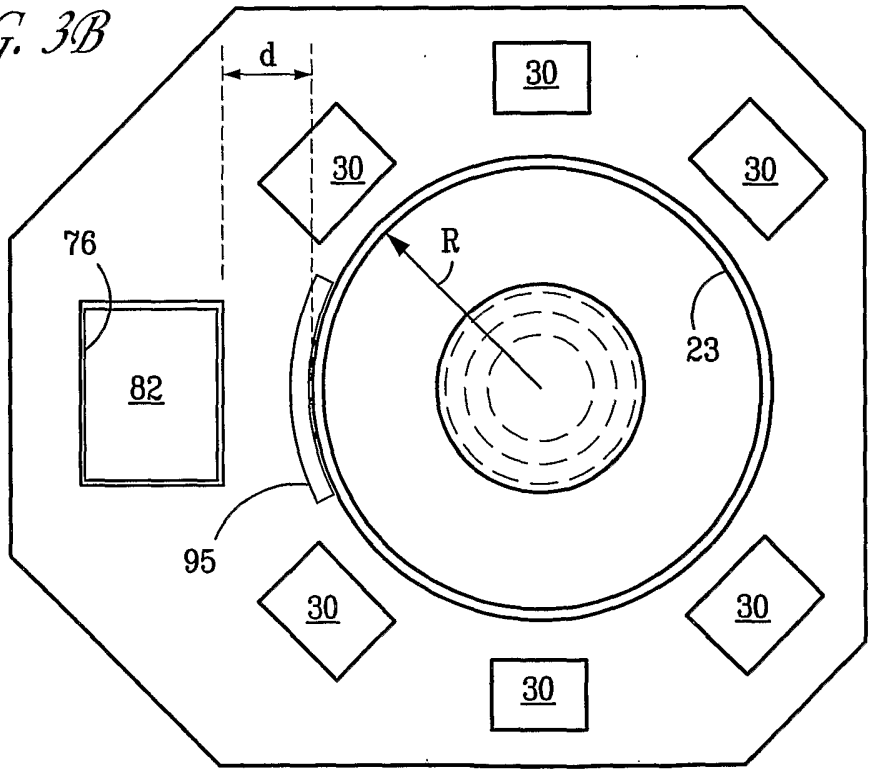

FIG. 4

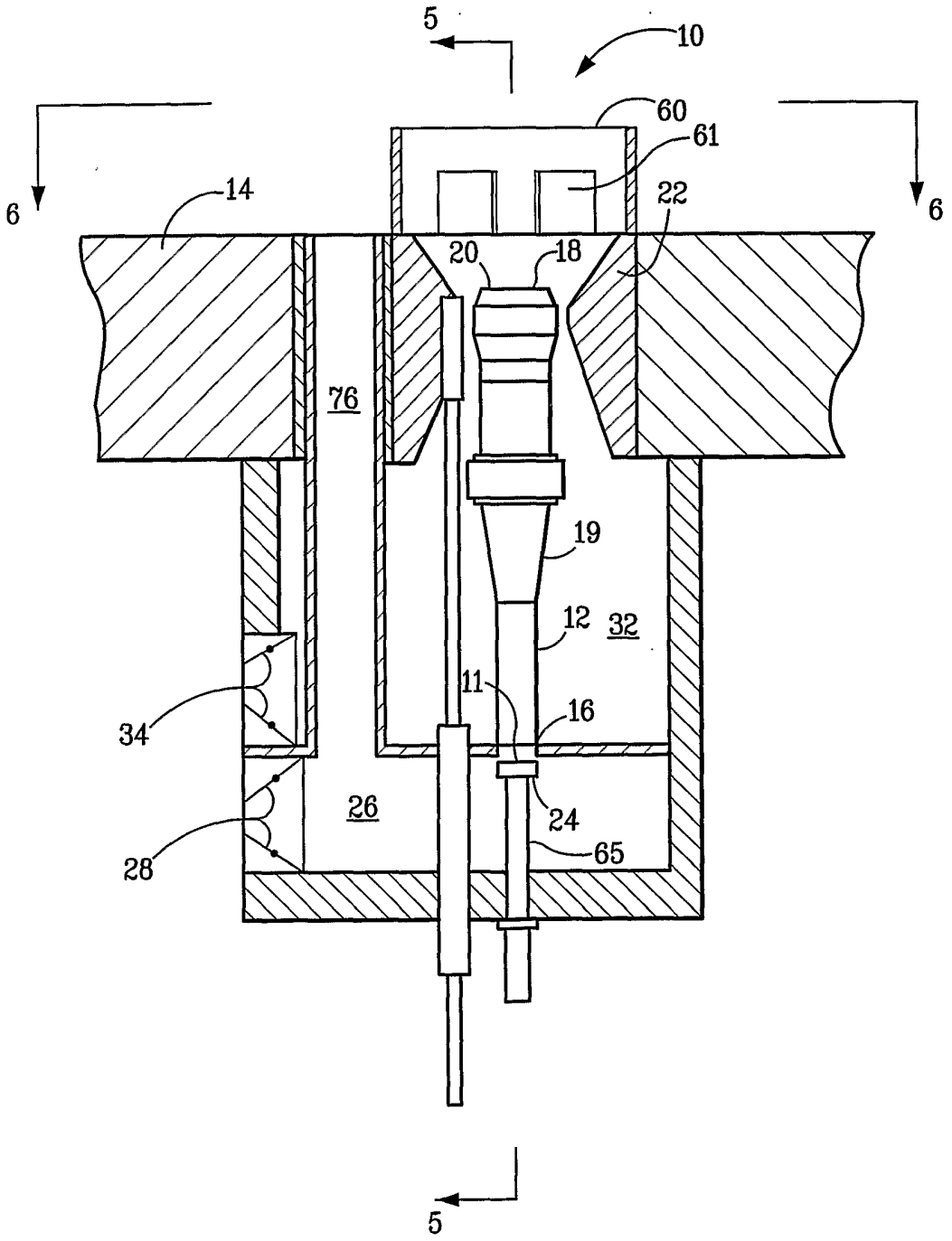

FIG. 5

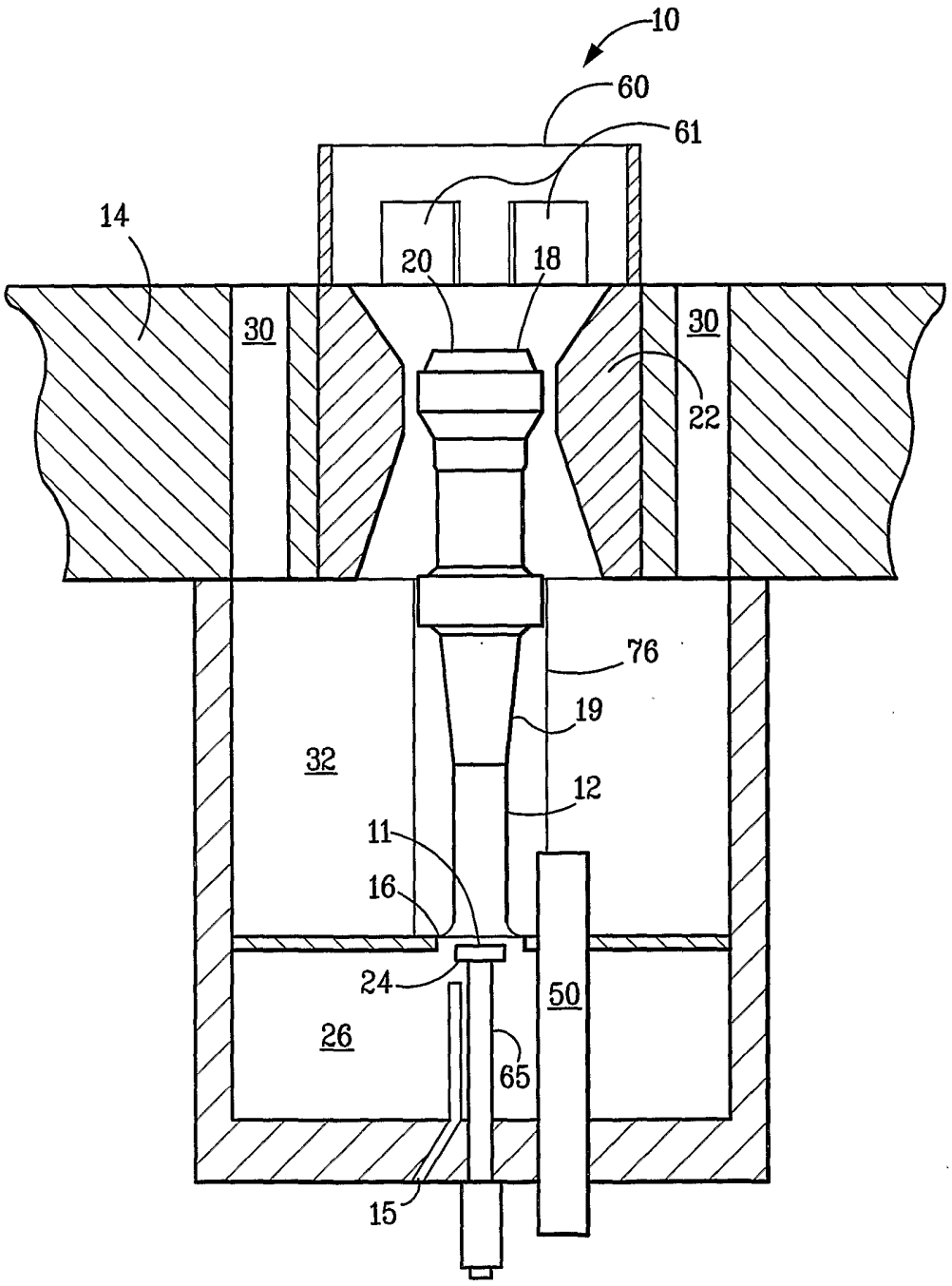

FIG. 6

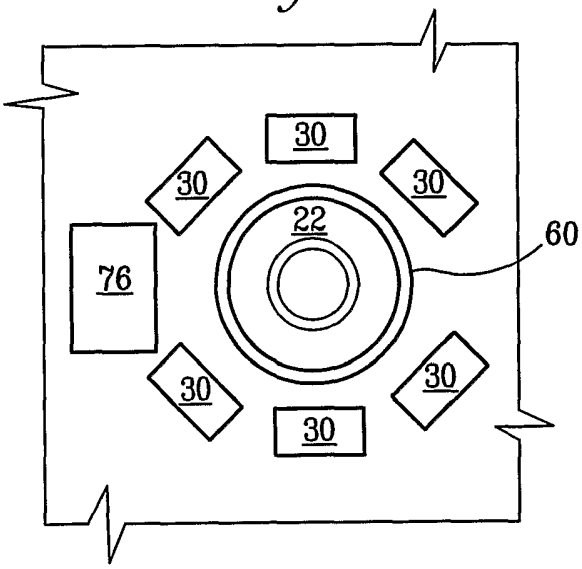

FIG. 7

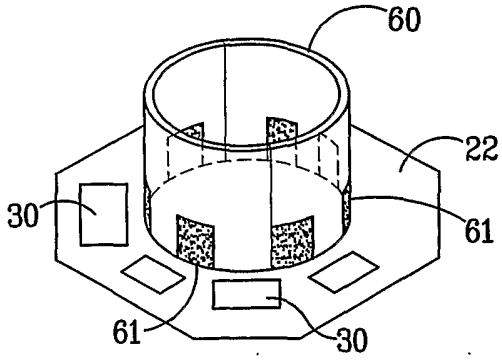

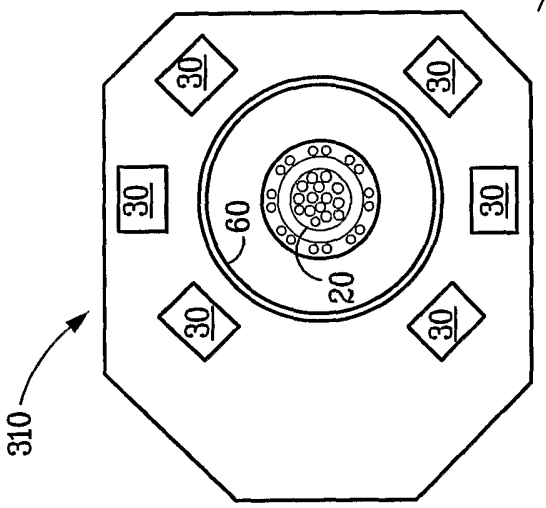
30
30
30
30
30
30
60
20
310

FIG. 9

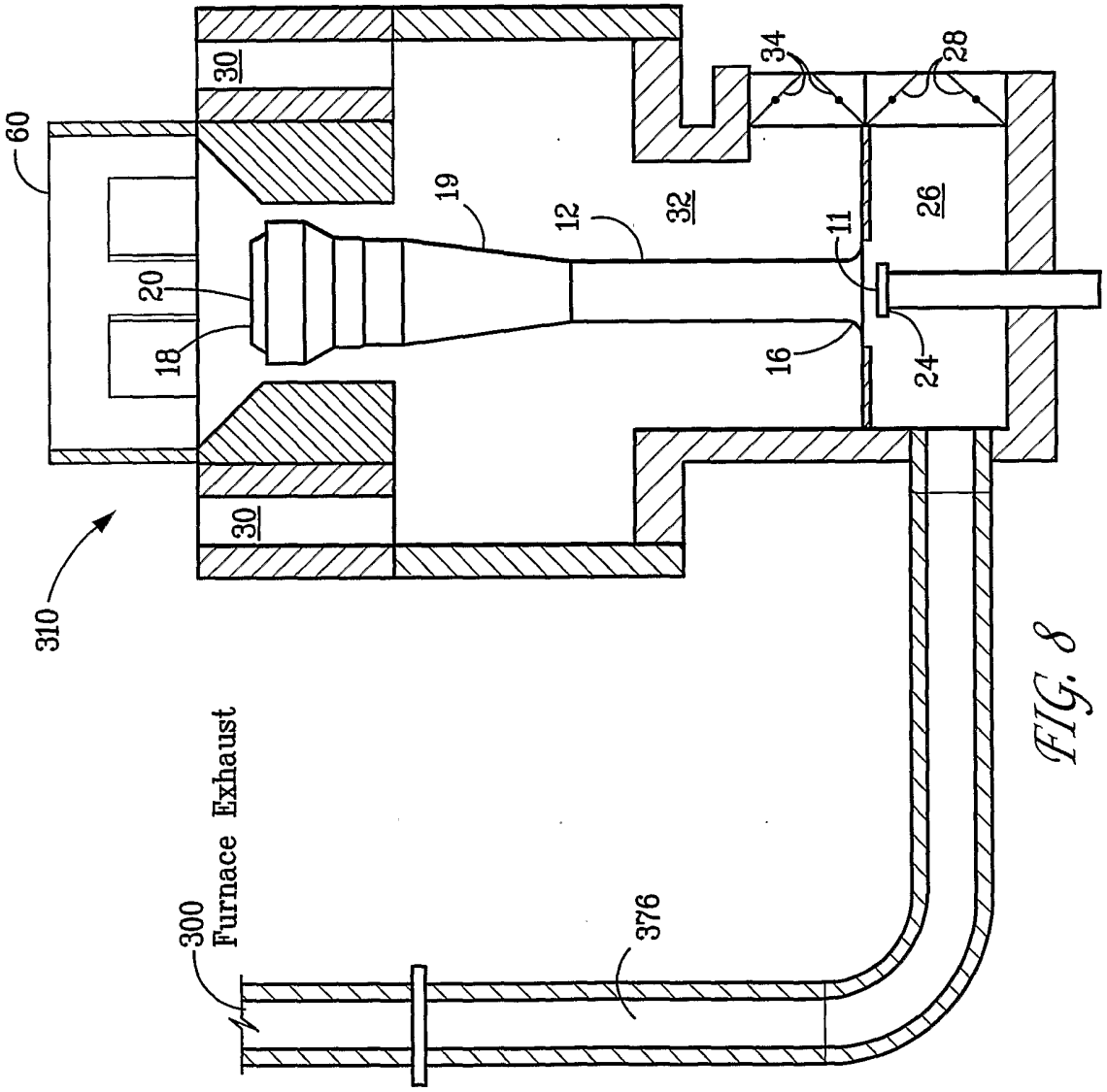
60
30
34
28
19
12
32
11
26
20
18
16
24
30
310
300
Furnace Exhaust
376

FIG. 8

FIG. 10

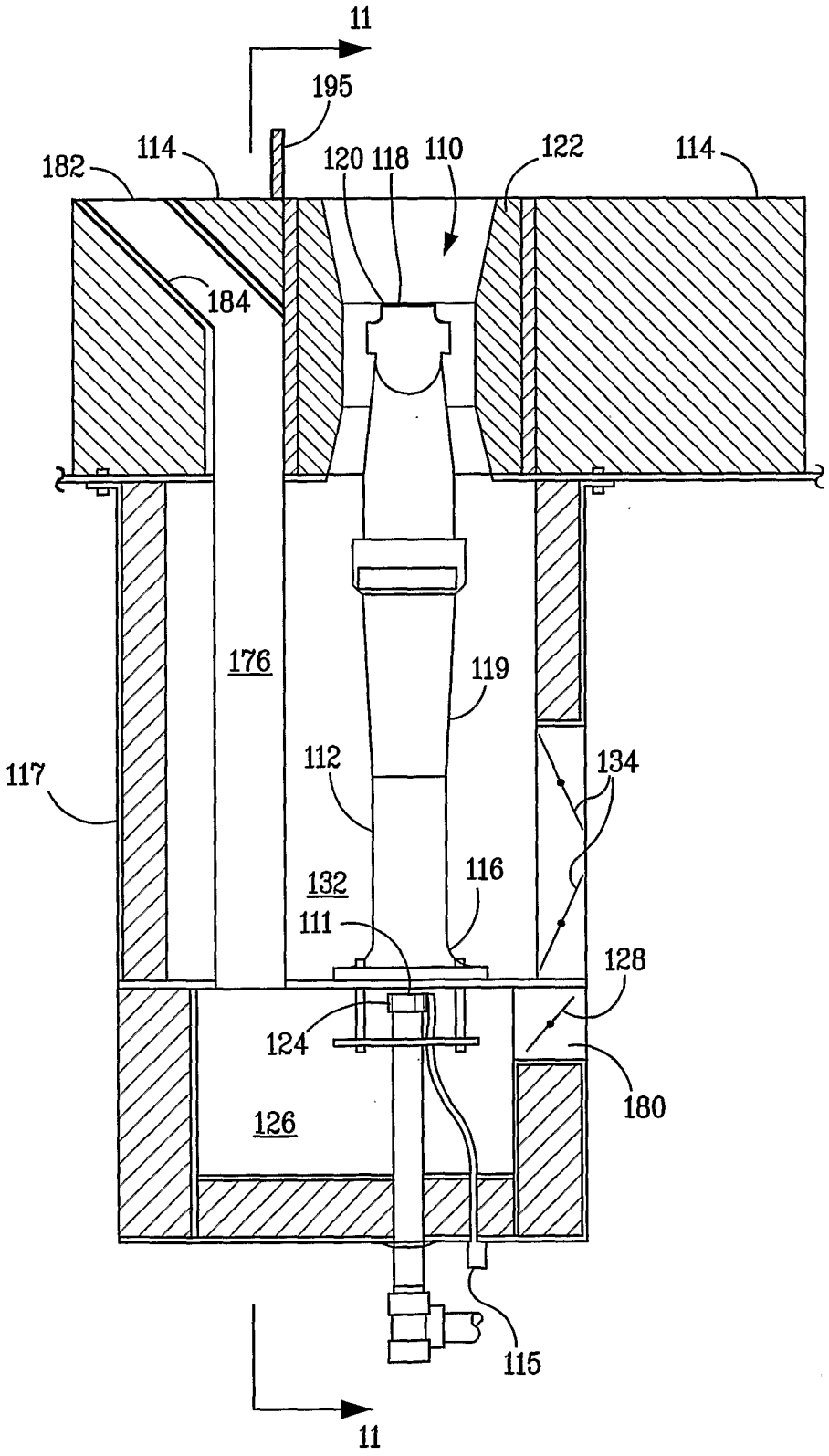
11
195
182
114
120
118
110
122
114
184
176
119
117
112
134
132
116
111
128
124
180
126
115
11

FIG. 11

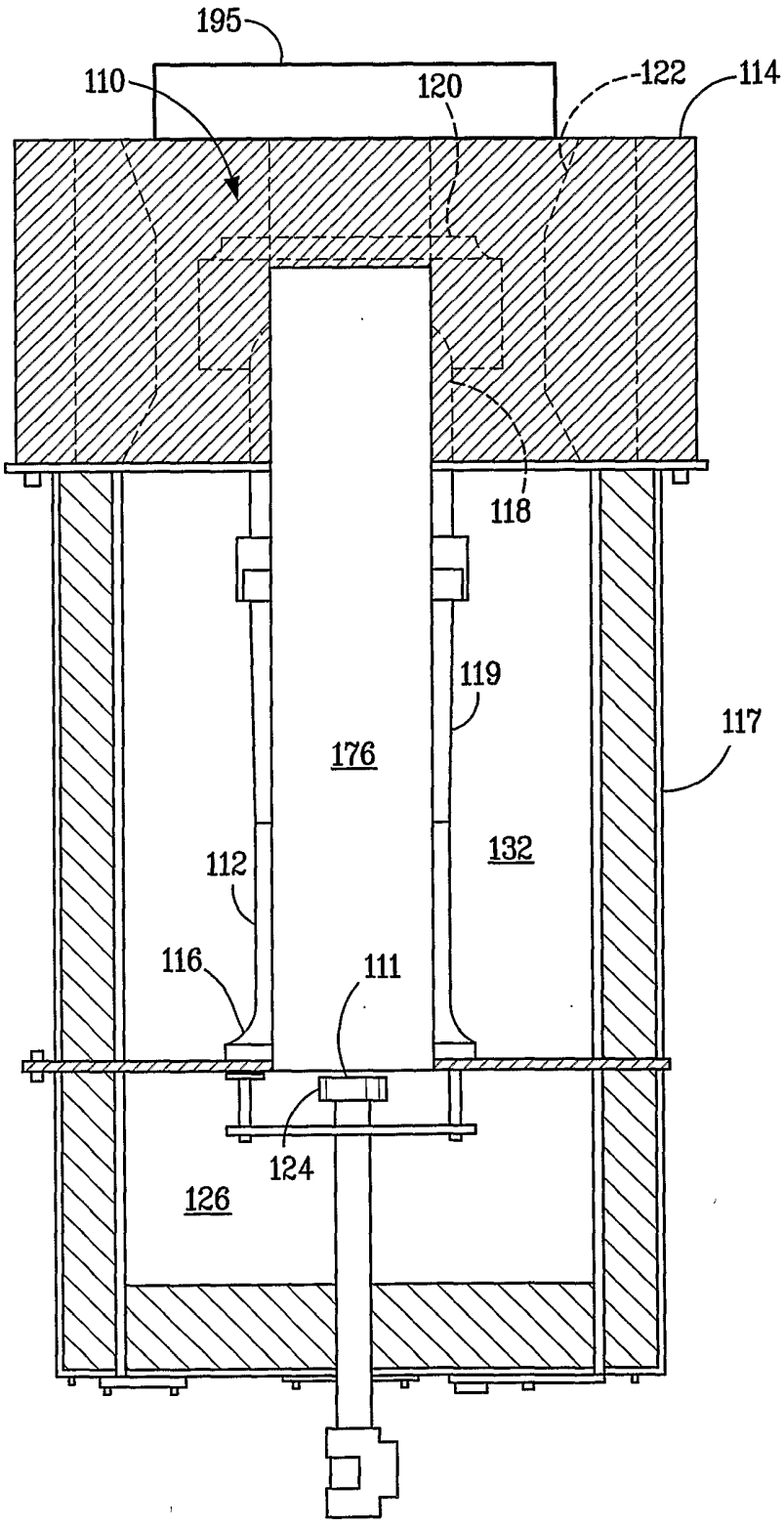

FIG. 12

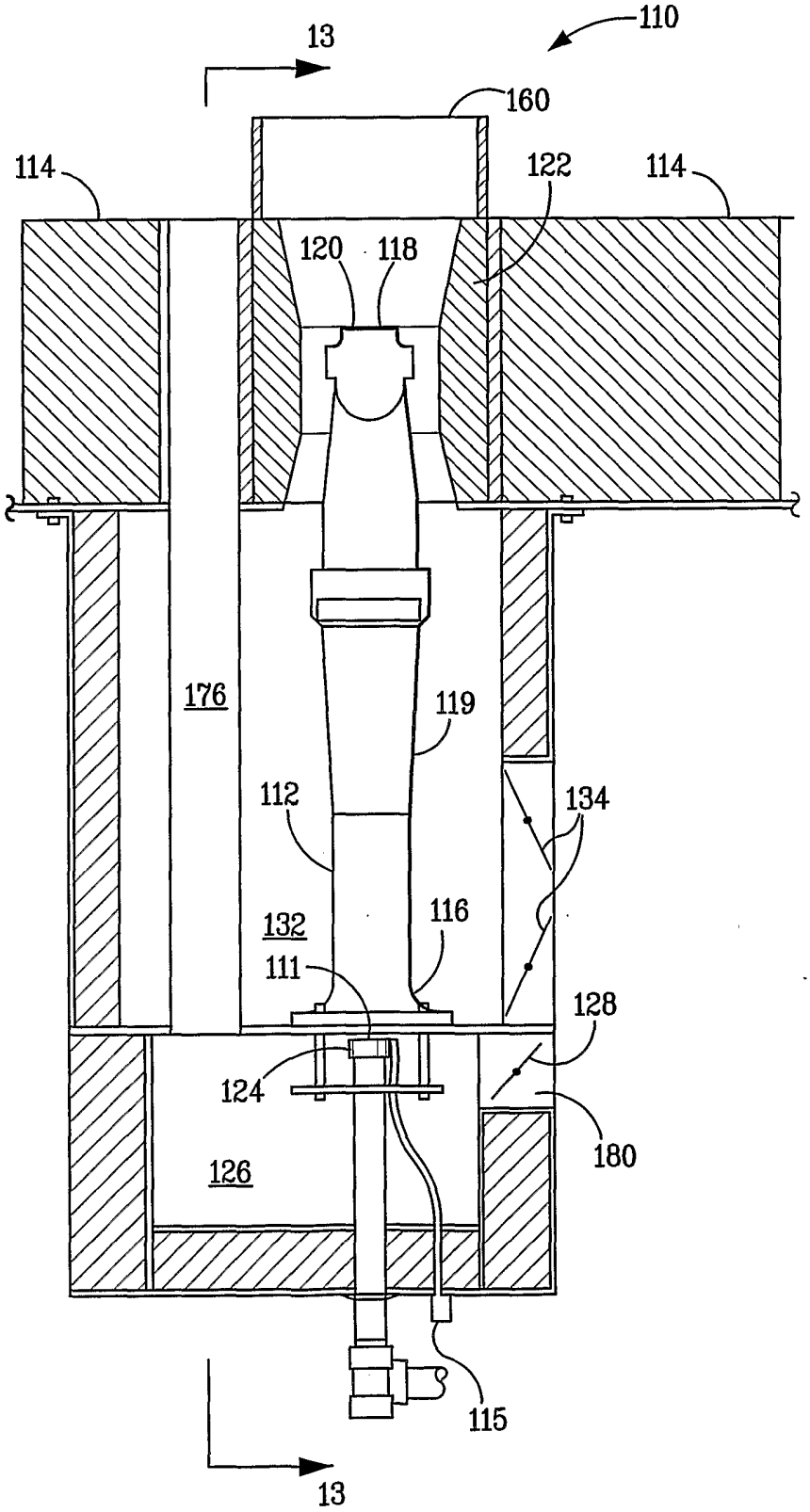
110
13
160
114
122
114
120
118
176
119
112
134
132
116
111
128
124
180
126
115
13

FIG. 13

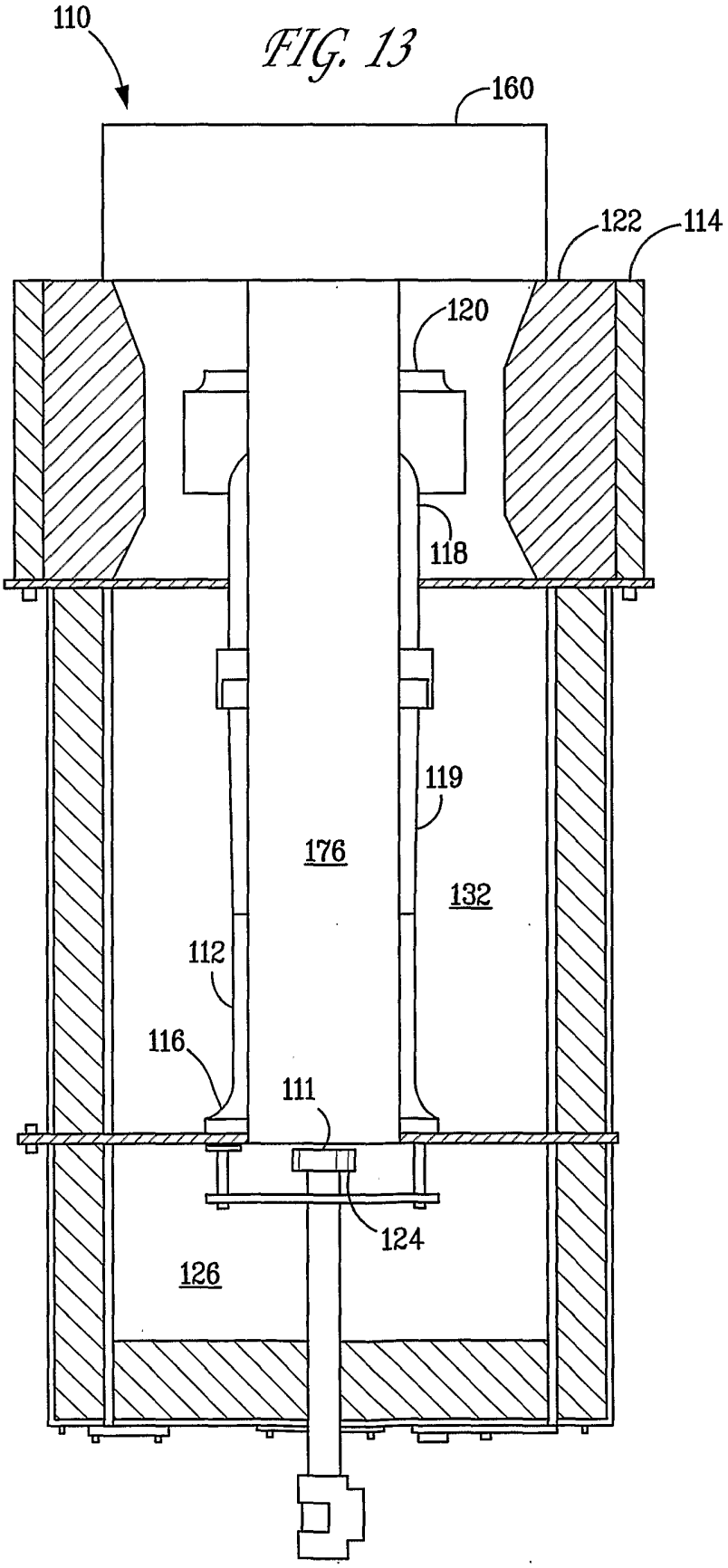

INTERNATIONAL SEARCH REPORT

Internal Application No
PCT/US 03/08056

A. CLASSIFICATION OF SUBJECT MATTER
IPC 7 F23D14/08 F23C9/08

According to International Patent Classification (IPC) or to both national classification and IPC

B. FIELDS SEARCHED

Minimum documentation searched (classification system followed by classification symbols)
IPC 7 F23C F23D

Documentation searched other than minimum documentation to the extent that such documents are included in the fields searched

Electronic data base consulted during the international search (name of data base and, where practical, search terms used)
EPO-Internal

C. DOCUMENTS CONSIDERED TO BE RELEVANT

Category °	Citation of document, with indication, where appropriate, of the relevant passages	Relevant to claim No.
Y	US 5 092 761 A (DINICOLANTONIO ARTHUR ROBERT) 3 March 1992 (1992-03-03) cited in the application the whole document	1-10, 17-20
Y	US 5 344 307 A (SCHWARTZ ROBERT E ET AL) 6 September 1994 (1994-09-06) the whole document	1-10, 17-20
A	US 2 813 578 A (WILLIAM FERGUSON) 19 November 1957 (1957-11-19) the whole document	1
A	US 4 708 638 A (BRAZIER JOHN F ET AL) 24 November 1987 (1987-11-24) the whole document	1

-/--

[X] Further documents are listed in the continuation of box C.

[X] Patent family members are listed in annex.

° Special categories of cited documents :

"A" document defining the general state of the art which is not considered to be of particular relevance

"E" earlier document but published on or after the international filing date

"L" document which may throw doubts on priority claim(s) or which is cited to establish the publication date of another citation or other special reason (as specified)

"O" document referring to an oral disclosure, use, exhibition or other means

"P" document published prior to the international filing date but later than the priority date claimed

"T" later document published after the international filing date or priority date and not in conflict with the application but cited to understand the principle or theory underlying the invention

"X" document of particular relevance; the claimed invention cannot be considered novel or cannot be considered to involve an inventive step when the document is taken alone

"Y" document of particular relevance; the claimed invention cannot be considered to involve an inventive step when the document is combined with one or more other such documents, such combination being obvious to a person skilled in the art.

"&" document member of the same patent family

Date of the actual completion of the international search	Date of mailing of the international search report
17 July 2003	24/07/2003

Name and mailing address of the ISA	Authorized officer
European Patent Office, P.B. 5818 Patentlaan 2 NL – 2280 HV Rijswijk Tel. (+31–70) 340–2040, Tx. 31 651 epo nl, Fax: (+31–70) 340–3016	Coli, E

Form PCT/ISA/210 (second sheet) (July 1992)

C.(Continuation) DOCUMENTS CONSIDERED TO BE RELEVANT

Category °	Citation of document, with indication,where appropriate, of the relevant passages	Relevant to claim No.
A	US 6 056 538 A (LEUCKEL WOLFGANG ET AL) 2 May 2000 (2000-05-02) column 5, line 15 - line 60; figures 1,2	1
A	US 4 629 413 A (MICHELSON HERBERT D ET AL) 16 December 1986 (1986-12-16) cited in the application the whole document	1

INTERNATIONAL SEARCH REPORT

Information on patent family members

Intern[redacted]al Application No
PCT/US 03/08056

Patent document cited in search report	Publication date	Patent family member(s)	Publication date
US 5092761 A	03-03-1992	AU 654986 B2	01-12-1994
		AU 9073891 A	11-06-1992
		CA 2096414 A1	20-05-1992
		DE 69127824 D1	06-11-1997
		DE 69127824 T2	29-01-1998
		EP 0558610 A1	08-09-1993
		ES 2107523 T3	01-12-1997
		JP 2796889 B2	10-09-1998
		JP 5507347 T	21-10-1993
		KR 137956 B1	01-05-1998
		MX 9102142 A1	01-06-1992
		SG 48366 A1	17-04-1998
		RU 2068154 C1	20-10-1996
		WO 9208927 A1	29-05-1992
US 5344307 A	06-09-1994	US 5098282 A	24-03-1992
		US 5154596 A	13-10-1992
		US 5269678 A	14-12-1993
US 2813578 A	19-11-1957	NONE	
US 4708638 A	24-11-1987	CA 1267601 A1	10-04-1990
		DE 3666625 D1	30-11-1989
		EP 0194079 A1	10-09-1986
		JP 61240008 A	25-10-1986
US 6056538 A	02-05-2000	EP 0931979 A1	28-07-1999
		WO 9937951 A1	29-07-1999
		JP 2003517554 T	27-05-2003
US 4629413 A	16-12-1986	AU 592770 B2	25-01-1990
		AU 4718985 A	20-03-1986
		CA 1261244 A1	26-09-1989
		DE 3569975 D1	08-06-1989
		EG 17745 A	30-12-1990
		EP 0187441 A2	16-07-1986
		ES 8703004 A1	01-04-1987
		JP 2022479 C	26-02-1996
		JP 7013531 B	15-02-1995
		JP 61070311 A	11-04-1986
		TR 24503 A	12-11-1991