S. W. MANNING.

METHOD OF AND APPARATUS FOR DRAWING GLASS.

APPLICATION FILED APR. 17, 1916.

1,239,024.

Patented Sept. 4, 1917.

3 SHEETS—SHEET 1.

FIG. 1.

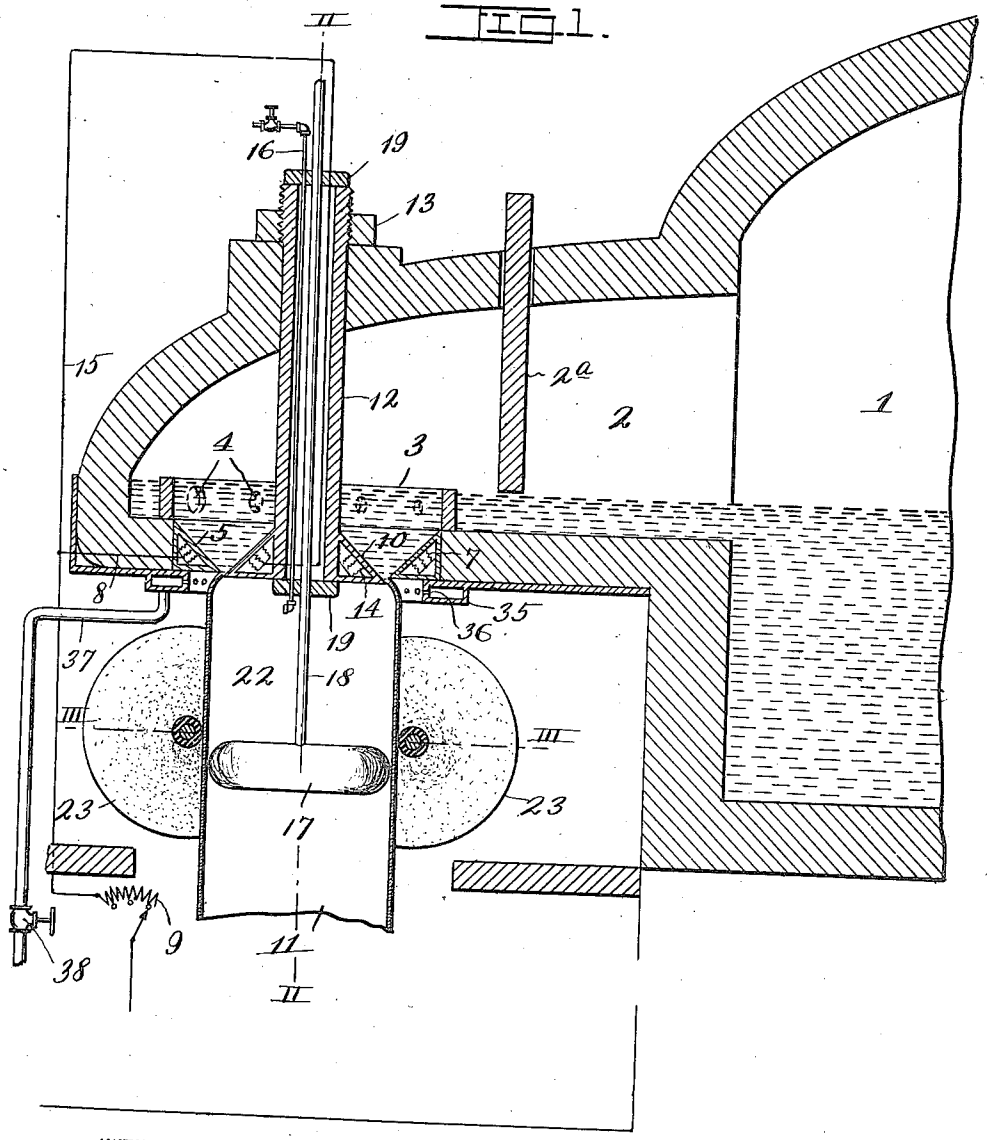

WITNESSES:

Fred C. Fischer.

L. J. Fischer

INVENTOR:

Stephen W. Manning

BY

F. G. Fischer,

ATTORNEY.

S. W. MANNING.

METHOD OF AND APPARATUS FOR DRAWING GLASS.

APPLICATION FILED APR. 17, 1916.

1,239,024.

Patented Sept. 4, 1917.

3 SHEETS—SHEET 2.

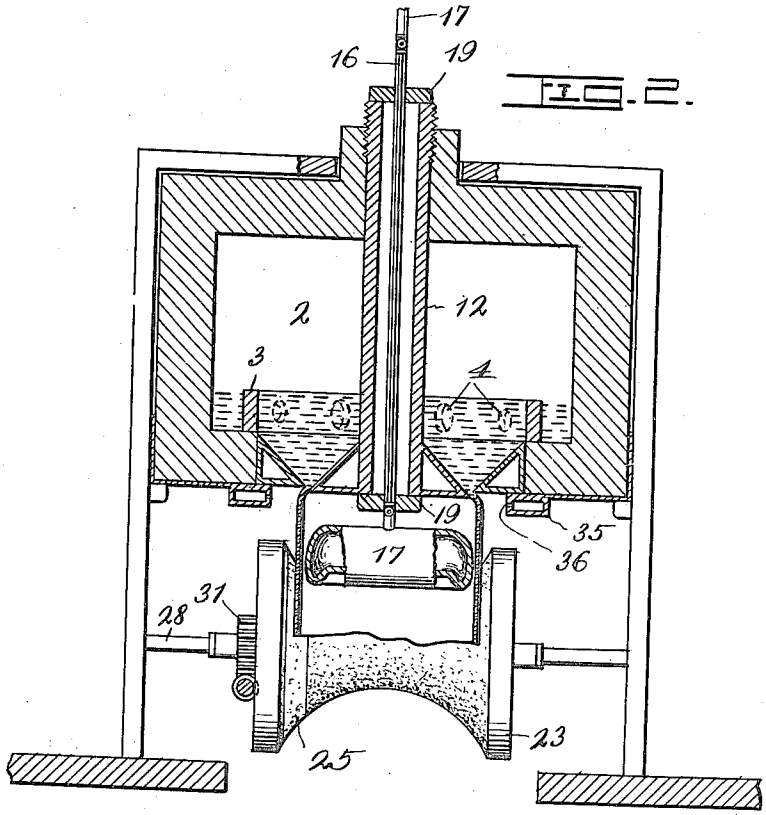

FIG. 2.

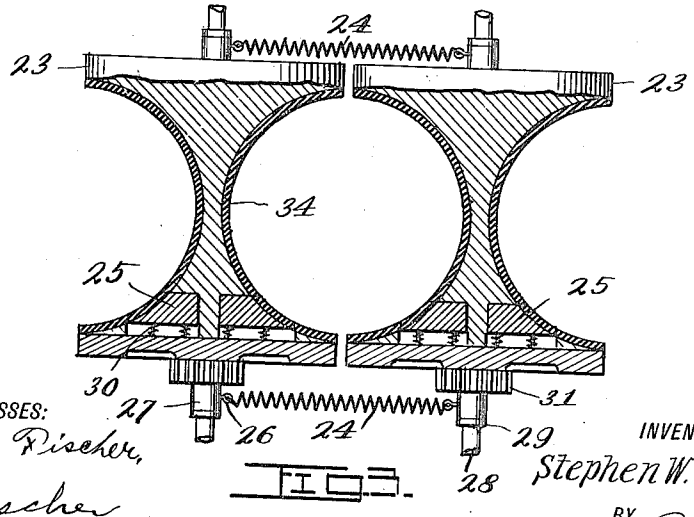

FIG. 3.

WITNESSES:

Fred C. Fischer,

S. J. Fischer

INVENTOR:

Stephen W. Manning,

BY

F. G. Fischer,

ATTORNEY.

S. W. MANNING.

METHOD OF AND APPARATUS FOR DRAWING GLASS.

APPLICATION FILED APR. 17, 1916.

1,239,024.

Patented Sept. 4, 1917.

3 SHEETS—SHEET 3.

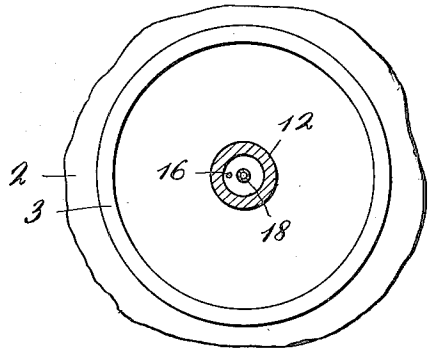

FIG. 4.

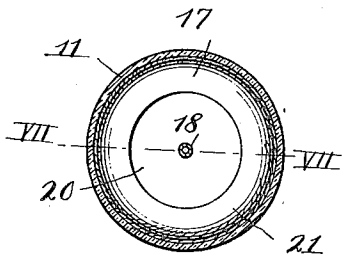

FIG. 5.

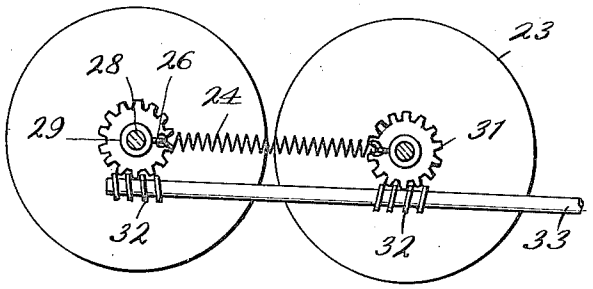

FIG. 6.

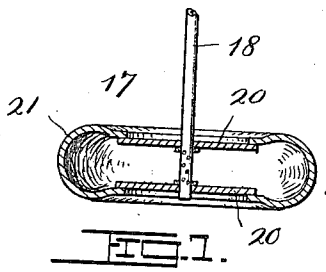

FIG. 7.

WITNESSES:

Fred C. Fischer,

L. J. Fischer

INVENTOR

Stephen W. Manning,

BY

F. G. Fischer

ATTORNEY.

UNITED STATES PATENT OFFICE.

STEPHEN W. MANNING, OF SAPULPA, OKLAHOMA.

METHOD OF AND APPARATUS FOR DRAWING GLASS.

1,239,024. Specification of Letters Patent. Patented Sept. 4, 1917.

Application filed April 17, 1916. Serial No. 91,616.

To all whom it may concern:

Be it known that I, STEPHEN W. MANNING, a citizen of the United States, residing at Sapulpa, in the county of Creek and State of Oklahoma, have invented certain new and useful Improvements in Methods of and Apparatus for Drawing Glass, of which the following is a specification.

My invention relates to the drawing of glass cylinders as practised in the art of manufacturing window glass, and one feature of the invention relates to the utilization of the force of gravity in the drawing process whereby the power employed in drawing the cylinder upward as heretofore, is saved. A further beneficial result is attained by removing the operator from the intense heat ascending from the melting furnace and placing him in the basement of the factory, where the temperature is such as not to interfere with the efficiency of said operator.

A further feature is the provision of means for reheating the molten mass at the drawing off point, as I have found by practice that a predetermined temperature may be more equably obtained throughout said mass by reheating the same than by attempting to reduce its temperature to the proper degree at the drawing off point.

Other features of the invention reside in flexible sealing means and feeding means, which readily accommodate themselves to any inequalities existing in the interior and exterior surfaces of the cylinder, and thus obviate any danger of cracking said cylinder by exerting undue pressure on any part thereof.

Still other features of the invention will hereinafter appear and in order that said invention may be readily understood, reference will now be made to the accompanying drawings, in which:

Figure 1 is a vertical sectional view of an apparatus employed in carrying out the invention.

Fig. 2 is a vertical cross section on line II—II of Fig. 1.

Fig. 3 is a cross section of a pair of drawing rolls on line III—III of Fig. 1.

Fig. 4 is a plan view of a well constituting an important feature of the invention.

Fig. 5 is a cross section on line III—III of Fig. 1, with the drawing rolls omitted.

Fig. 6 is a side elevation of the drawing rolls and their driving gear.

Fig. 7 is a cross section of the cylinder sealing means with the cylinder omitted, on line VII—VII of Fig. 5.

Referring now in detail to the several parts, 1 designates the melting furnace, which is provided with one or more bays 2.

3 designates a well located within the bay 2 and provided with inlet ports 4, which gradually diminish in size as they approach the furnace side of the bay to insure equable temperature of the molten mass entering the well through said inlets, as will hereinafter appear. The bottom 5 of the well is of truncated conical form and consists, preferably, of metal alloy which can be readily heated to regulate the temperature of the molten mass flowing from the well. Any suitable thermal means may be used for this purpose. In the drawings, I have disclosed a thermo-electric device 7, fed with current through conductors 8 leading from any suitable source of electrical supply, not shown. A rheostat 9 communicates with the conductors 8, to control the flow of current therethrough to the thermo-electric device 7.

10 designates a conical valve for regulating the flow of the molten mass from the well 3 and coacting with the bottom of the well in initially forming the glass cylinder 11. The valve 10 is provided with a tubular stem 12 extending centrally through the well 3 and upward through the top of the bay 2, where its threaded end is engaged by a nut 13. By turning the nut 13 the stem 12 and the valve 10 may be adjusted vertically to control the thickness of the cylinder wall, or when desired, to completely cut off flow of the molten mass from the well 3.

The valve 10 is hollow and like the conical bottom of the well 3 is made of metal which can be readily heated, a thermo-electric device 14 being shown for that purpose. The device 14 is fed through conductors 15 extending through the tubular valve stem 12 and communicating with the conductors 8 in advance of the rheostat 9, so that the temperature of the thermo-electric devices 7 and 14 can be simultaneously controlled.

16 designates a blow pipe for introducing air under pressure to the cylinder 11 for attaining and maintaining the desired diameter thereof. The air discharged from the blow pipe 16 is retained within the cylinder by sealing means 17 depending from a hollow stem 18 slidable in caps 19 closing the ends of the valve stem 12 to prevent the

escape of air introduced into the cylinder 11 by the blow pipe 16. As disclosed by Fig. 7, the sealing means 17 is hollow and consists of two disks 20 spaced apart and an annular flexible element 21, surrounding said disks. The flexible element 21 consists, preferably, of asbestos cloth or other heat resisting material.

As above stated the stem 18 is slidable in the caps 19, the object being to enable vertical adjustment of the sealing means 17, so that it may be raised close to the bottom of the well 3 when initially starting the cylinder 11 and afterward moved downward with said cylinder to a point where the latter has attained a condition of sufficient rigidity to retain its form without aid from the air pressure above the sealing means. By making the periphery of the sealing means 17 flexible as disclosed, it is obvious that it will readily accommodate itself to any inequalities in the interior surface of the cylinder 11 and at the same time snugly engage such surface and prevent the escape of air from the chamber 22 formed by the sealing means 17, the valve 10, and the cylinder 11.

23 designates a pair of drawing rolls to control the downward passage of the cylinder 11 into the basement A of the factory in which the apparatus is installed. Like the sealing means 17, said drawing rolls 23 are self-adjusting to any inequalities in the surface of the cylinder 11. This is accomplished by yieldingly connecting the rolls with springs 24 and providing said rolls with self-adjusting peripheral rings 25. The springs 24 permit the rolls to move toward or away from each other, while the rings 25 provide for longitudinal expansion and contraction of the cylinder-engaging surface of the rolls. The ends of the springs 24 are connected to eyes 26 projecting from sleeves 27, held upon the shafts 28 of the rolls by collars 29. The rings 25 are yieldingly pressed away from the adjacent ends of the rolls by coil springs 30.

The rolls 23 are driven in reverse directions by any suitable gearing. In the drawings I have shown said rolls provided with worm wheels 31 driven by worms 32, mounted upon a shaft 33, driven by any suitable means, not shown. In practice sufficient play is left between the engaging parts of the worm wheels 31 and the worms 32 to permit the rolls 23 to move apart and toward each other sufficiently to accommodate such ordinary inequalities as may exist in the cylinder 11. The peripheries of the rolls 23 and the rings 25 are, preferably, covered with asbestos cloth 34, which, like the flexible covering of the sealing means, will not scratch or otherwise mar the surface of the cylinder. The flexible cover 34, also acts as a cushion which yields to slight inequalities in the surface of the cylinder 11, without movement on the part of the rolls 23.

35 designates an annular air chamber having ports 36 through which air may be discharged against the molten glass to regulate the temperature thereof as it flows from the bottom of the well 3. The chamber 35 is supplied with air from a suitable source through a pipe 37 in which a valve 38 is placed to shut off or otherwise control the flow of air therethrough.

In practice, a gate 2^a is provided to regulate and cut off the influence of the intense furnace heat on the molten mass in the remote end of the bay and thereby regulate the temperature of said mass. As the molten mass approaches the surrounding wall of the well 3 the hottest part nearest the furnace, being unable to flow rapidly into the well on account of the small inlets 4, flows around the wall of the well due to the greater circulation through the larger inlets 4 most remote from the furnace 1. Hence, the temperature of the fresh molten glass within the well is substantially of uniform temperature and consistency throughout. As the mass flows downward to the point of drawing, it is uniformly heated to a higher degree by the heated bottom of the well and the top of the valve 10, so that when drawn off in the form of a cylinder 11 the body of the same will be heated to a uniform degree and result in a superior product not liable to the breakage that has heretofore attended the severing of cylinders into lengths, the splitting of them prior to their introduction into the flattening oven, and the final cutting thereof. As the plastic mass flows from the point of drawing, it is expanded to the desired diameter by air discharged from the blow pipe 16 and partly cooled by air discharged through the ports 36 of the chamber 35. As the cylinder 11 passes downward by the force of gravity to the setting point, it is engaged by the rolls 23 which control its further downward passage. After the cylinder has attained the desired diameter through the pressure of the air introduced through the blow pipe 16, such diameter is maintained in subsequent drawing by the air retained above the sealing means 17. Thus, blowing, as such, occurs only when starting to draw, and the air subsequently admitted to the chamber 22, merely maintains that diameter as the drawing process proceeds, preventing contraction of diameter due to the tendency of the glass, while being drawn, to form in a column smaller than the cylinder as started. As the cylinder 11 passes into the basement A it is cracked off into suitable lengths.

While I have shown the preferred mode of carrying out the principle of my invention, I do not limit myself to the precise means shown, but reserve the right to make

such changes in the apparatus and mode of applying the principle of the invention as properly fall within the spirit and scope of the claims.

Having thus described my invention, what I claim and desire to secure by Letters Patent, is:

1. In an apparatus of the character described, means for producing a glass tube, and rolls each having a fixed section and a spring pressed axially yieldable section and a flexible covering for the sections adapted to embrace the exterior of said tube and control the drawing of the latter.

2. In an apparatus of the character described, means for producing a glass tube, a pair of oppositely mounted movable rolls adapted to embrace the exterior of said tube and control the drawing of the latter, coil connecting springs common to the pair of rolls and connected at their ends to each roll, and means for driving said rolls in opposite directions.

3. In an apparatus of the character described, a source of molten glass, a well communicating with and arranged to one side of the source of molten glass, said well having radial passages, those adjacent the source having a lesser capacity than those remote therefrom.

4. In an apparatus of the character described, a melting furnace having a lateral bay, an outlet provided in the bottom of the bay, and a ring set on edge about the outlet to constitute a well, said ring having a peripheral series of openings, those adjacent the melting furnace being smaller than those on the opposite side of the ring.

5. The hereindescribed method of forming glass cylinders, which consists in drawing the glass from a molten bath and reheating said glass interiorly and exteriorly at the drawing off point.

6. In an apparatus of the character described, a well having an annular discharge for forming the glass into cylinders as the molten glass is being drawn from the well, and heating means arranged within and without the annular discharge of the well at the drawing off point.

7. In an apparatus of the character described, a well having a bottom of truncated conical form through which molten glass may flow, a conical valve coacting with the bottom of the well to control the flow of molten glass therefrom in cylindrical form, and heating means arranged in the well bottom and in the valve, each heating means being arranged at the point of discharge so that the glass will be heated interiorly and exteriorly just as it discharged in cylindrical form.

In testimony whereof I affix my signature, in the presence of two witnesses.

STEPHEN W. MANNING.

Witnesses:

CECIL M. FISHER,

GEO. L. BURKE.