US 20050148815A1

(19) United States

(12) Patent Application Publication (10) Pub. No.: US 2005/0148815 A1

Mortier et al. (43) Pub. Date: Jul. 7, 2005

(54) TRANSVENTRICULAR IMPLANT TOOLS AND DEVICES

(75) Inventors: **Todd J. Mortier**, Minneapolis, MN (US); **Cyril J. Schweich JR.**, St. Paul, MN (US); **Robert M. Vidlund**, Maplewood, MN (US); **Peter T. Keith**, St. Paul, MN (US); **Thomas M. Paulson**, Minneapolis, MN (US); **David A. Kusz**, Minneapolis, MN (US)

Correspondence Address:
FINNEGAN, HENDERSON, FARABOW, GARRETT & DUNNER LLP
901 NEW YORK AVENUE, NW
WASHINGTON, DC 20001-4413 (US)

(73) Assignee: **Myocor, Inc.**

(21) Appl. No.: **11/044,502**

(22) Filed: **Jan. 28, 2005**

Related U.S. Application Data

(63) Continuation of application No. 10/191,379, filed on Jul. 9, 2002, which is a continuation of application No. 09/864,320, filed on May 25, 2001, now Pat. No. 6,746,471, which is a continuation of application No. 09/123,977, filed on Jul. 29, 1998, now Pat. No. 6,260,552.

Publication Classification

(51) **Int. Cl.**[7] **A61F 2/00**; A61N 1/362

(52) **U.S. Cl.** **600/37**; 600/16

(57) **ABSTRACT**

A method and implantation tools for placing a transventricular splint including a tension member. The method includes gaining access to the patient's hearts and identifying entry or exit points for the tension member, marking those locations and delivering the tension member. Anchors for the tension member are also delivered. The length of the tensions member is measured and the walls of the heart drawn together. The pads are secured to the tension member and the tension member is trimmed to length. The pads are secured to the heart surface.

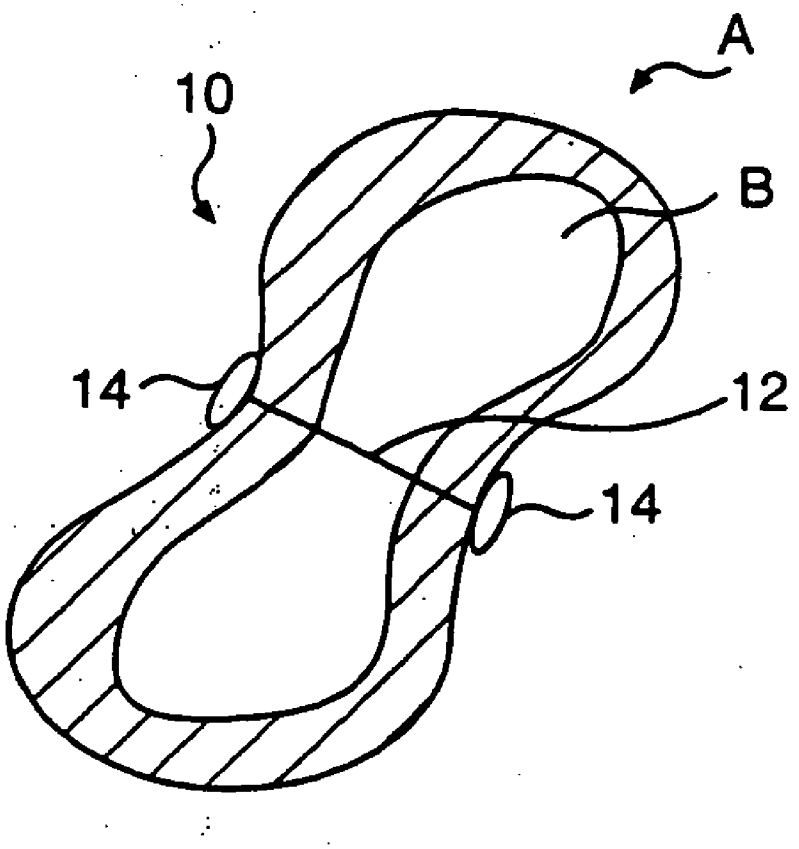

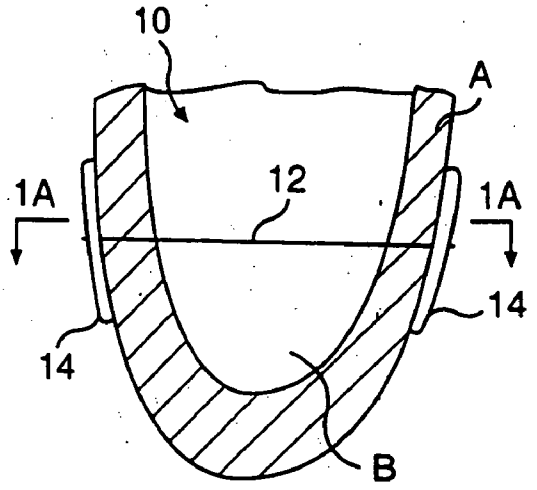

FIG. 1

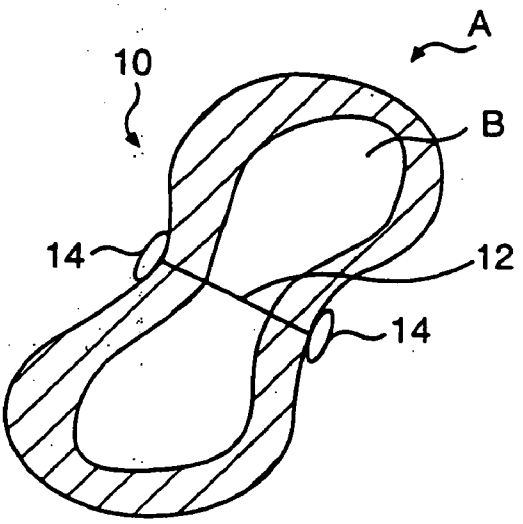

FIG. 1A

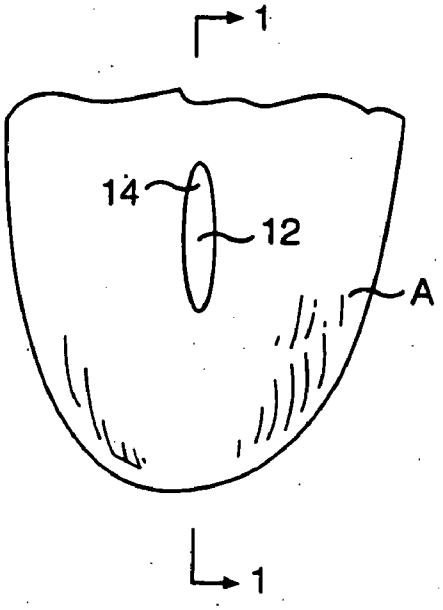

FIG. 2

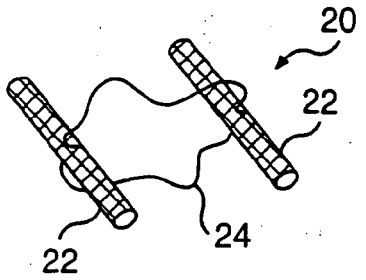

FIG. 3

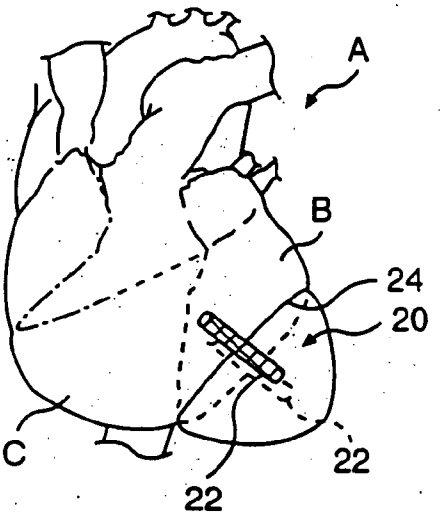

FIG. 4

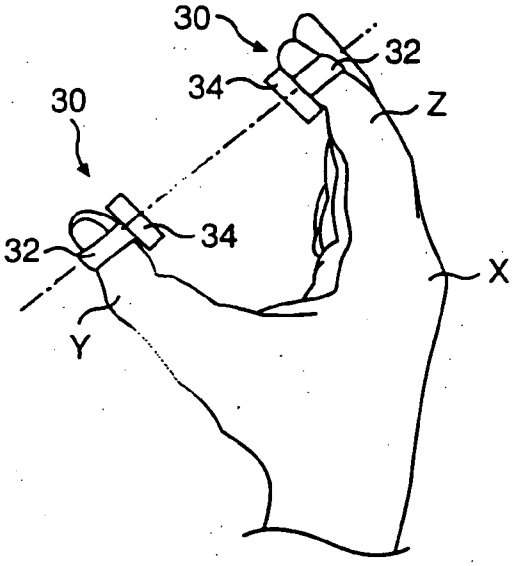

FIG. 5

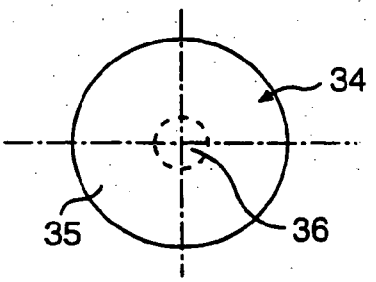

FIG. 6

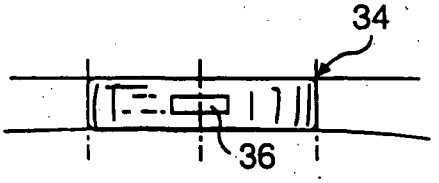

FIG. 7

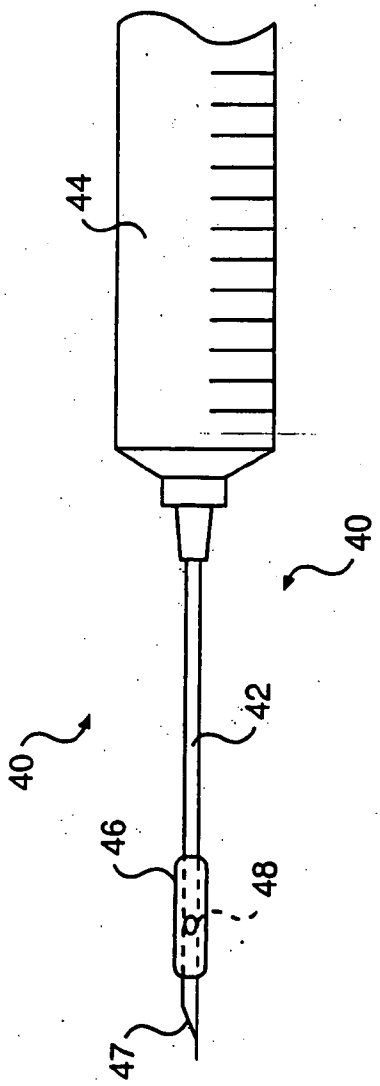

FIG 8

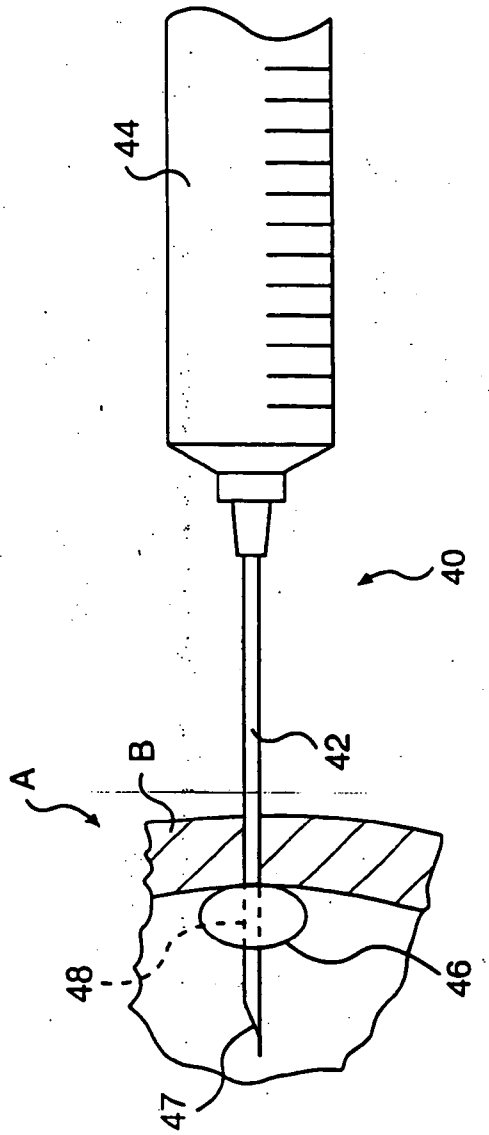

FIG 9

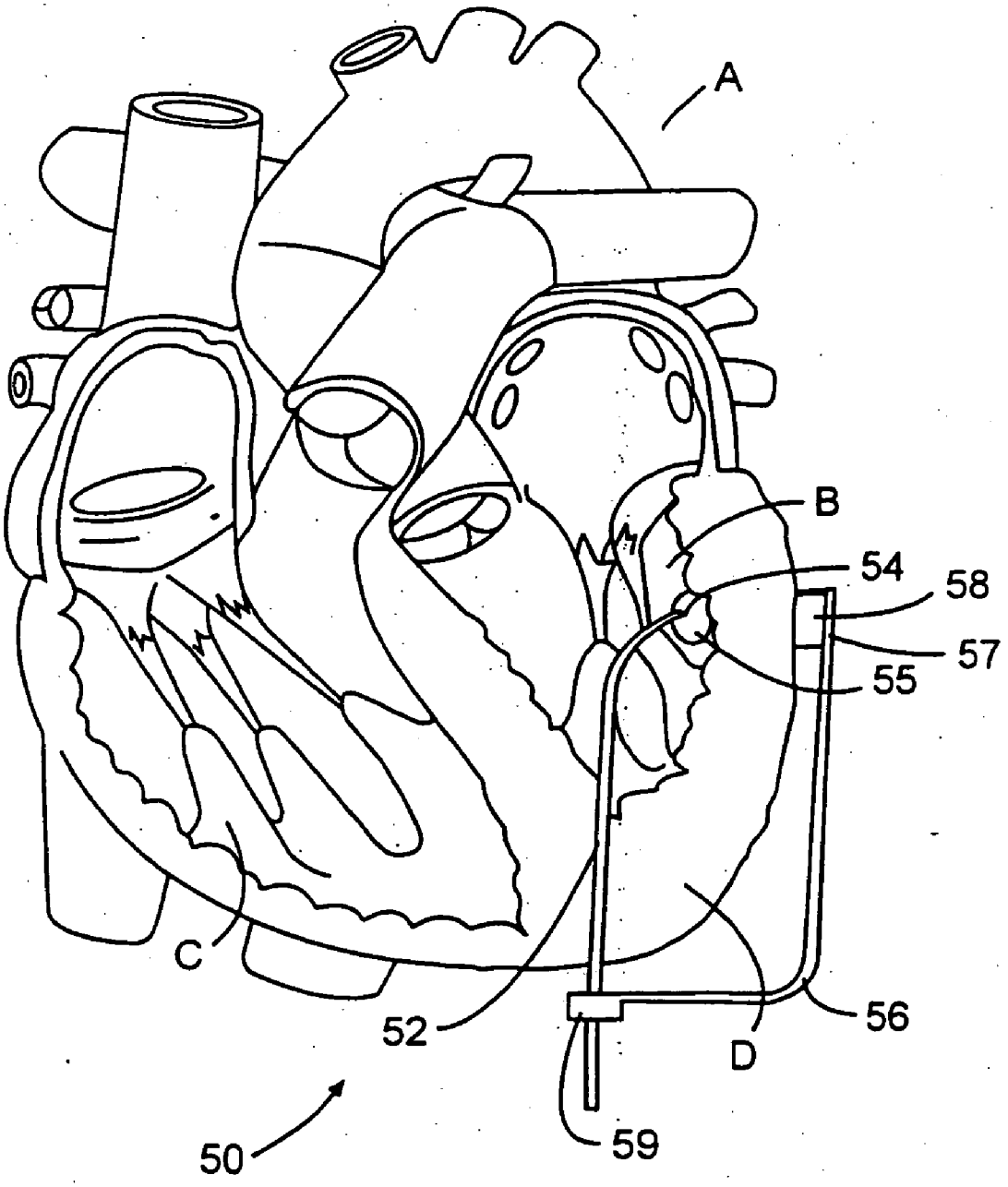

FIG. 10

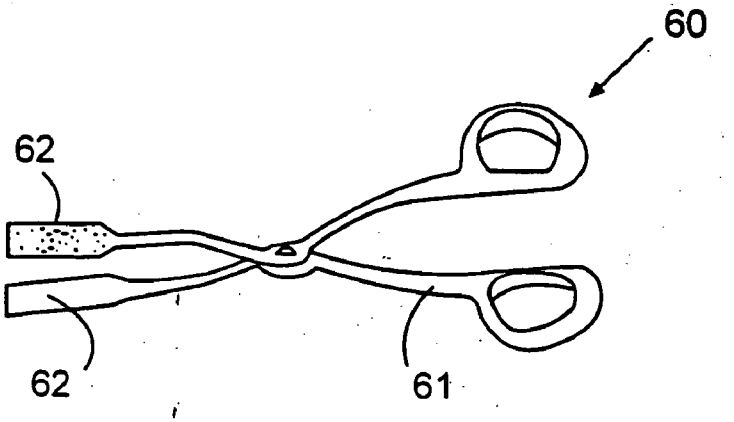

FIG. 11

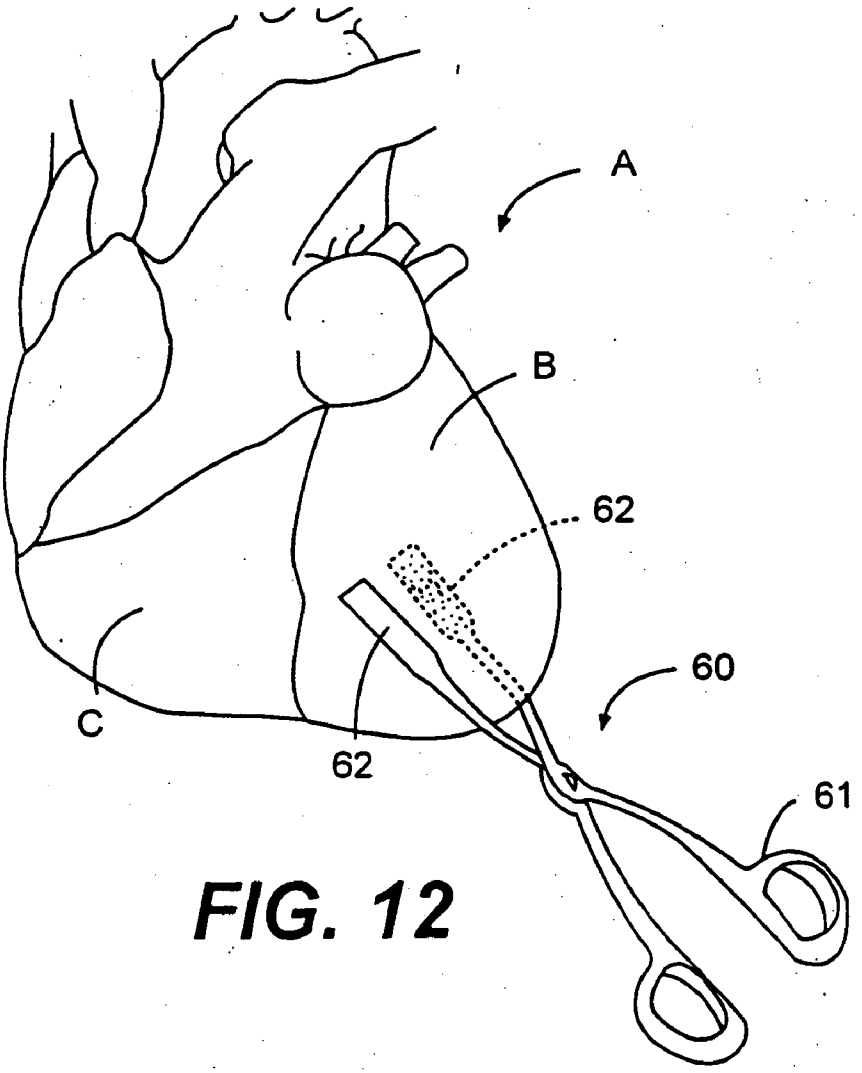

FIG. 12

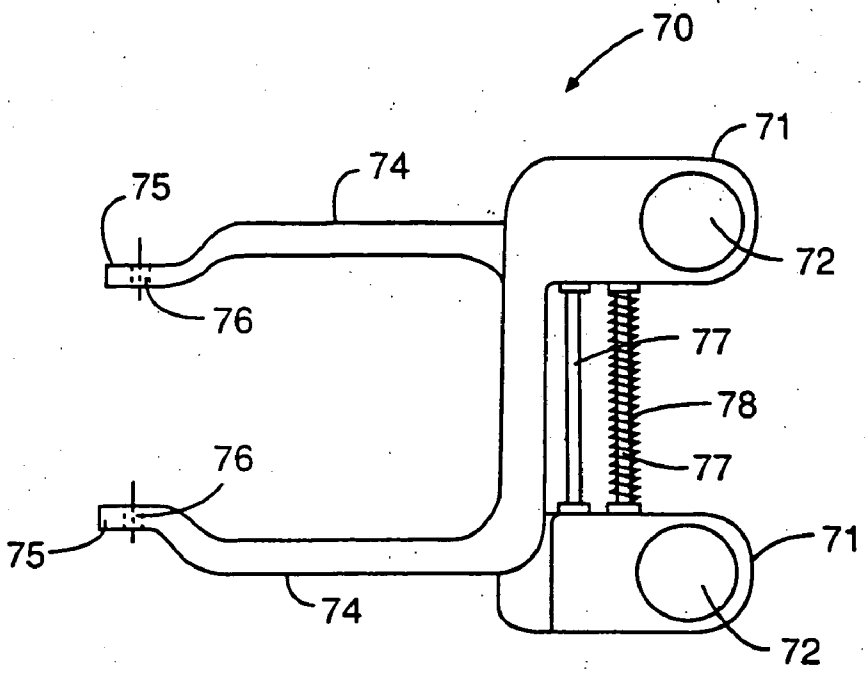
70
71
74
75
72
76
77
78
76
77
75
71
74
72

FIG. 13

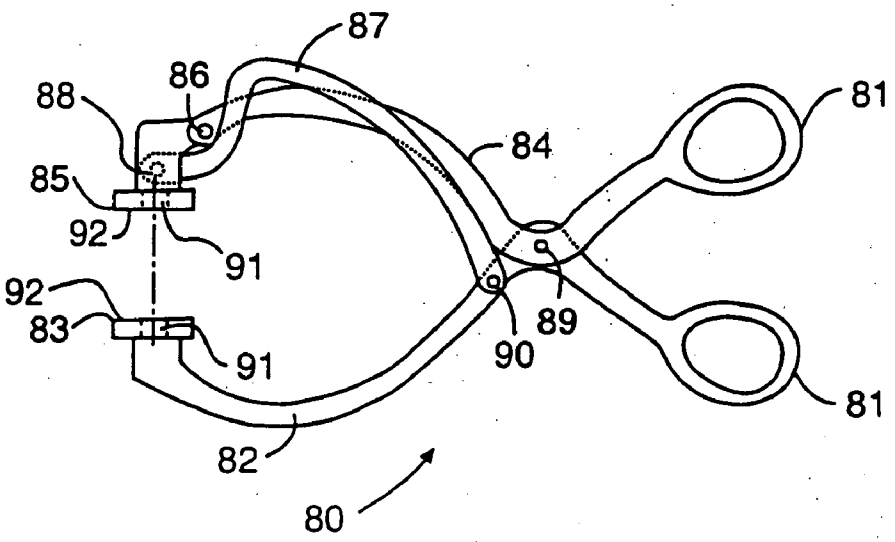
87
86
88
81
84
85
92
91
92
83
91
89
90
81
82
80

FIG. 14

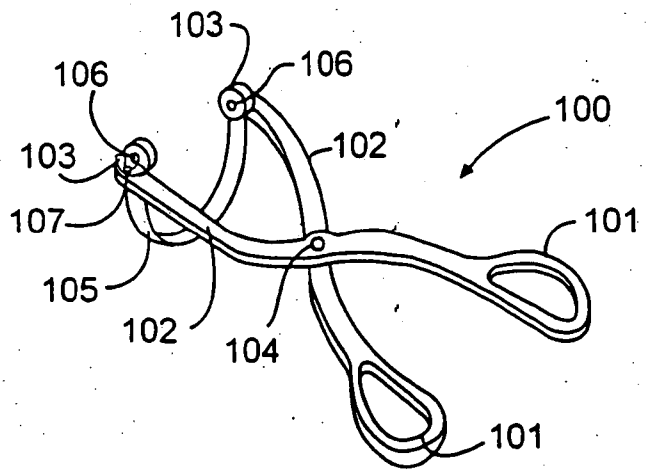

FIG. 15

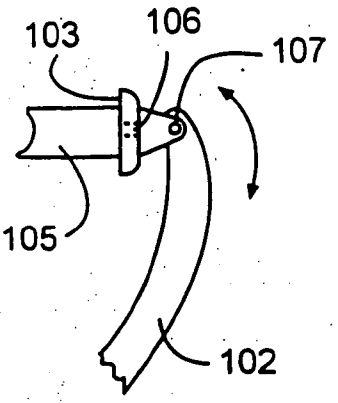

FIG. 15A

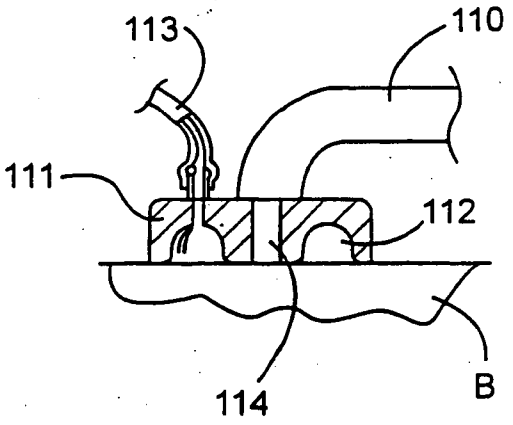

FIG. 16

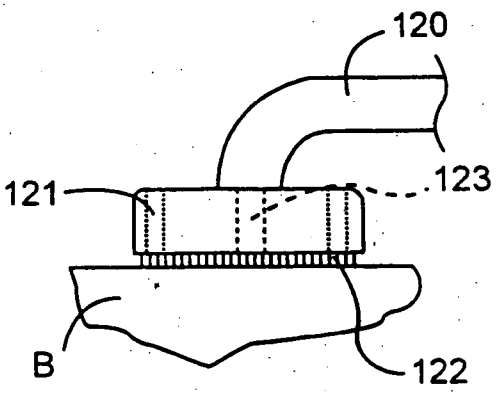

FIG. 17

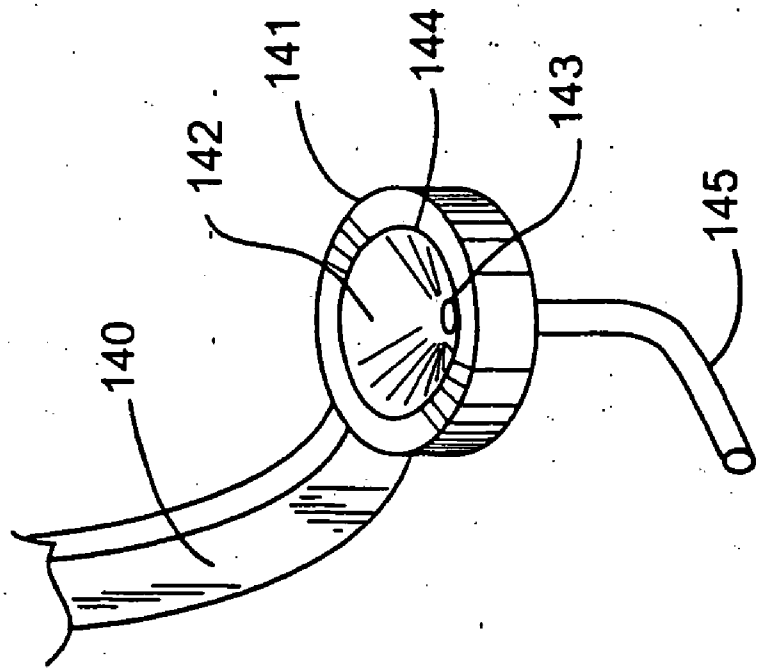

FIG. 19

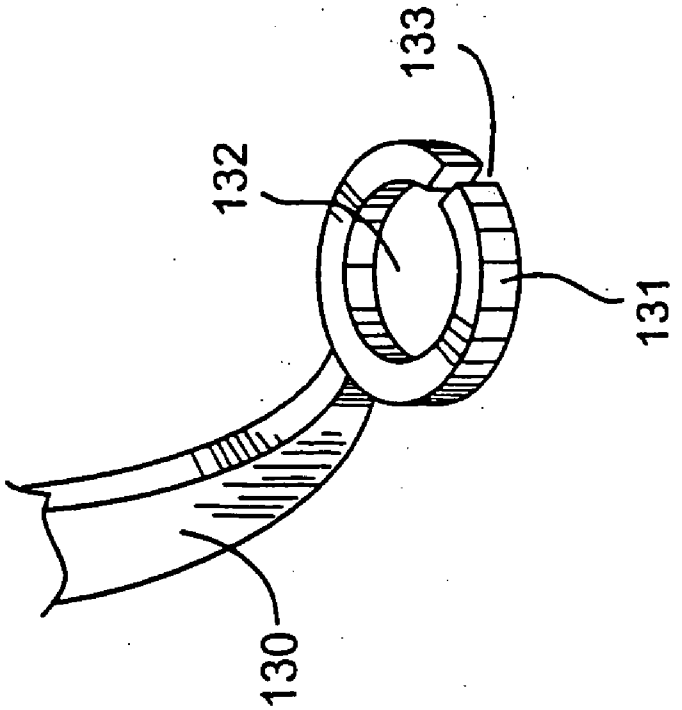

FIG. 18

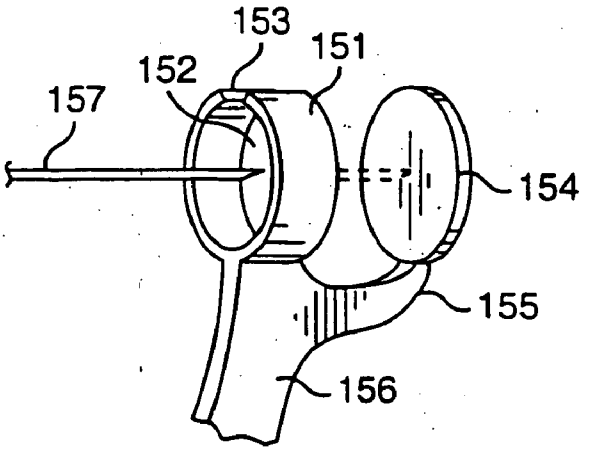

FIG. 20

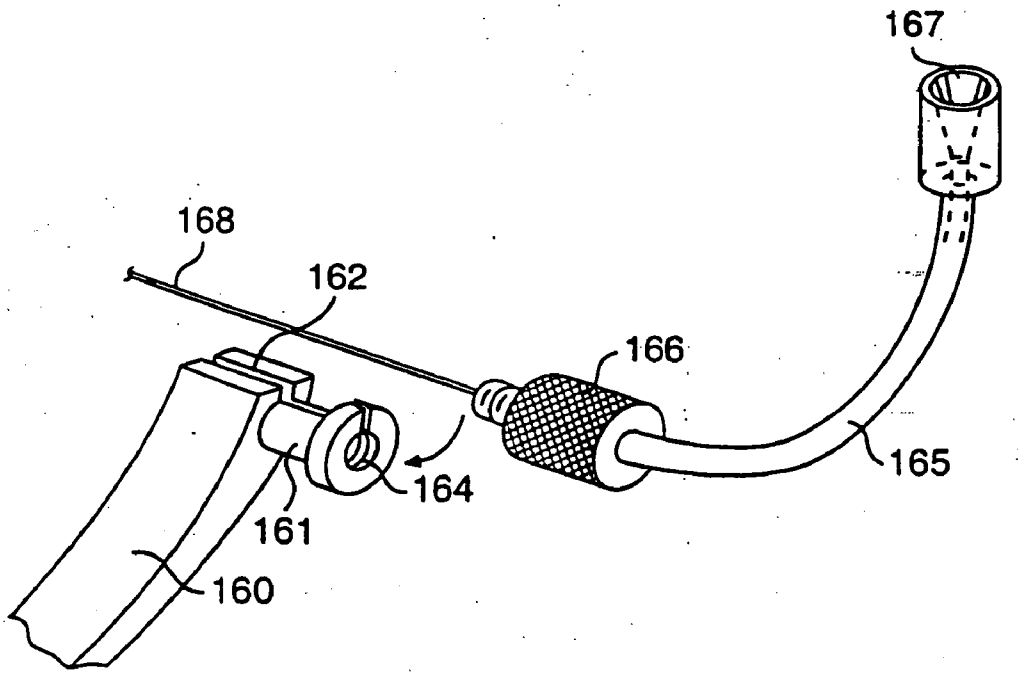

FIG. 21

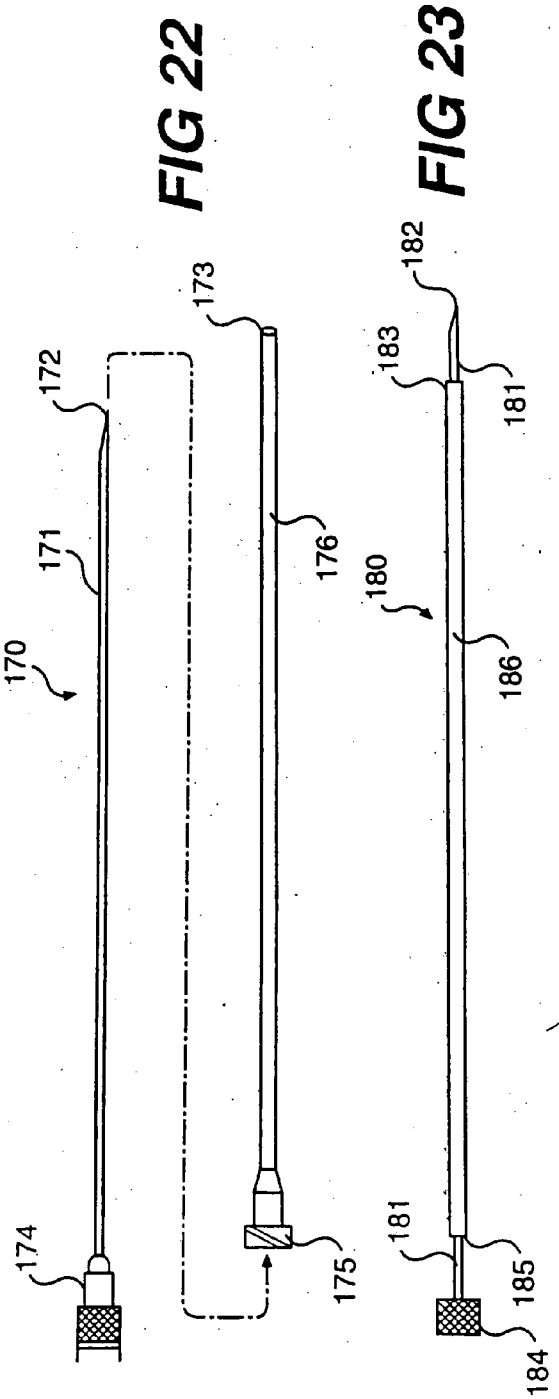

FIG 22

FIG 23

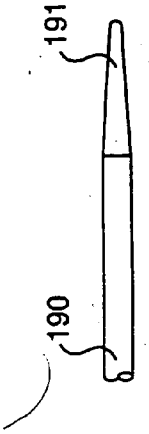

FIG 24

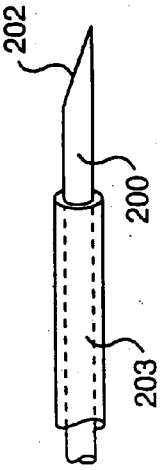

FIG 25

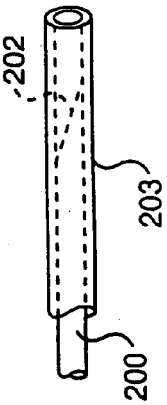

FIG 26

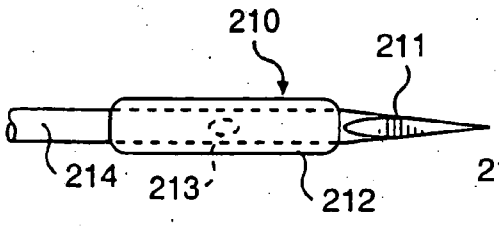

FIG. 27

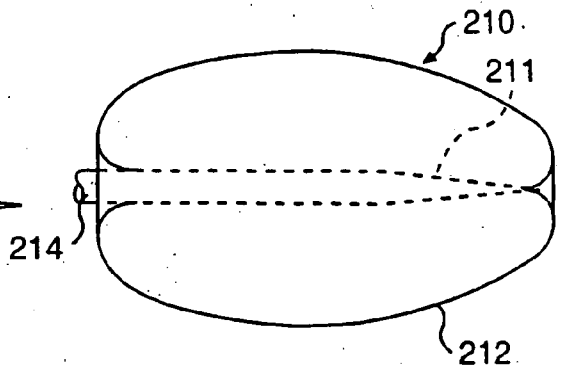

FIG. 28

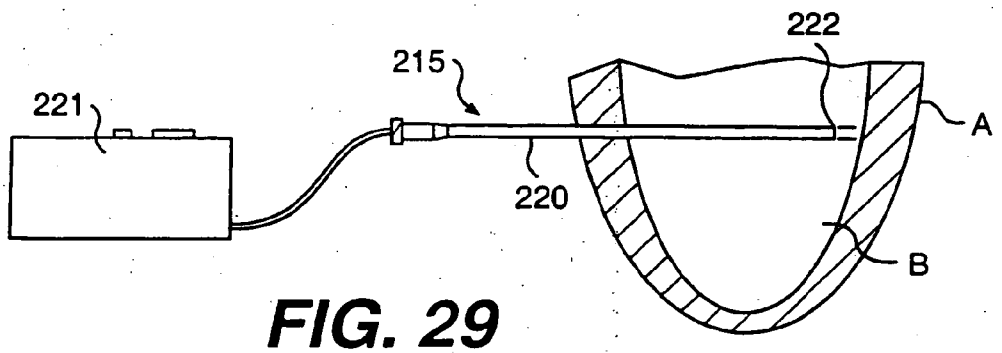

FIG. 29

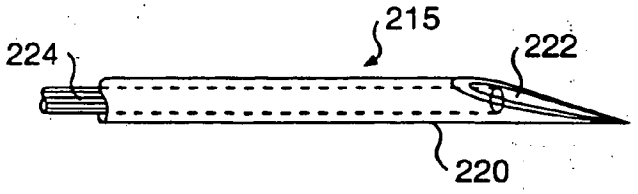

FIG. 30

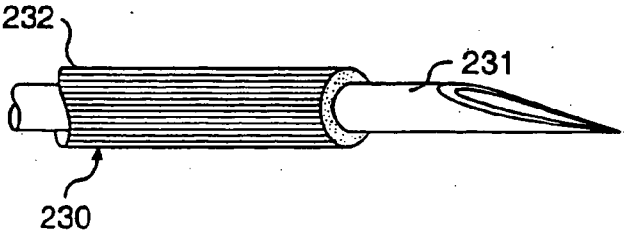

FIG. 31

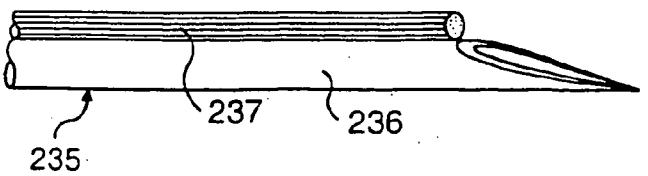

FIG. 32

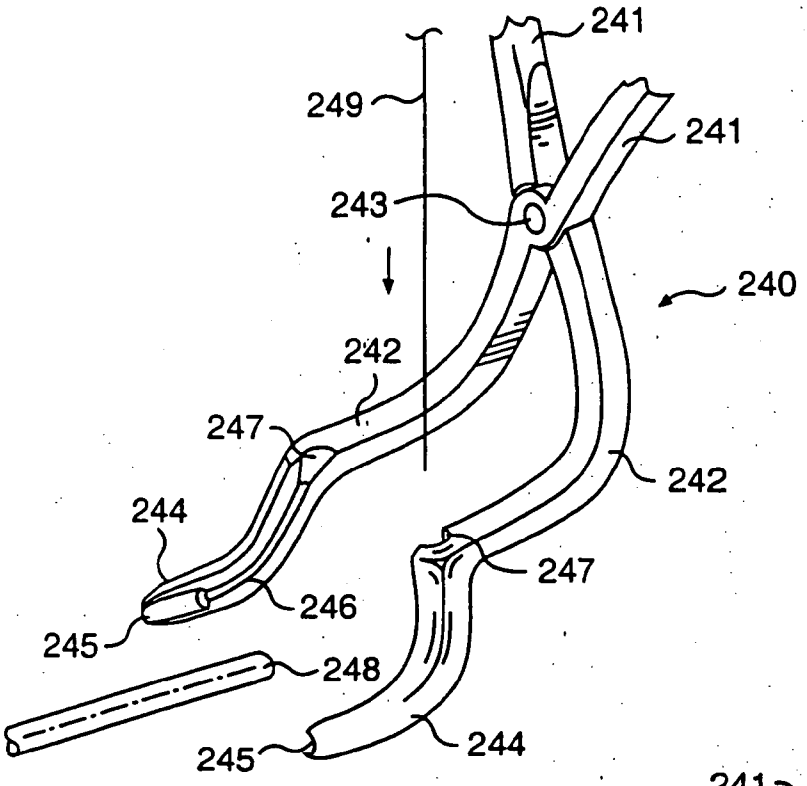
241
249
241
243
240
242
247
242
244
247
246
245
248
245
244

FIG. 33

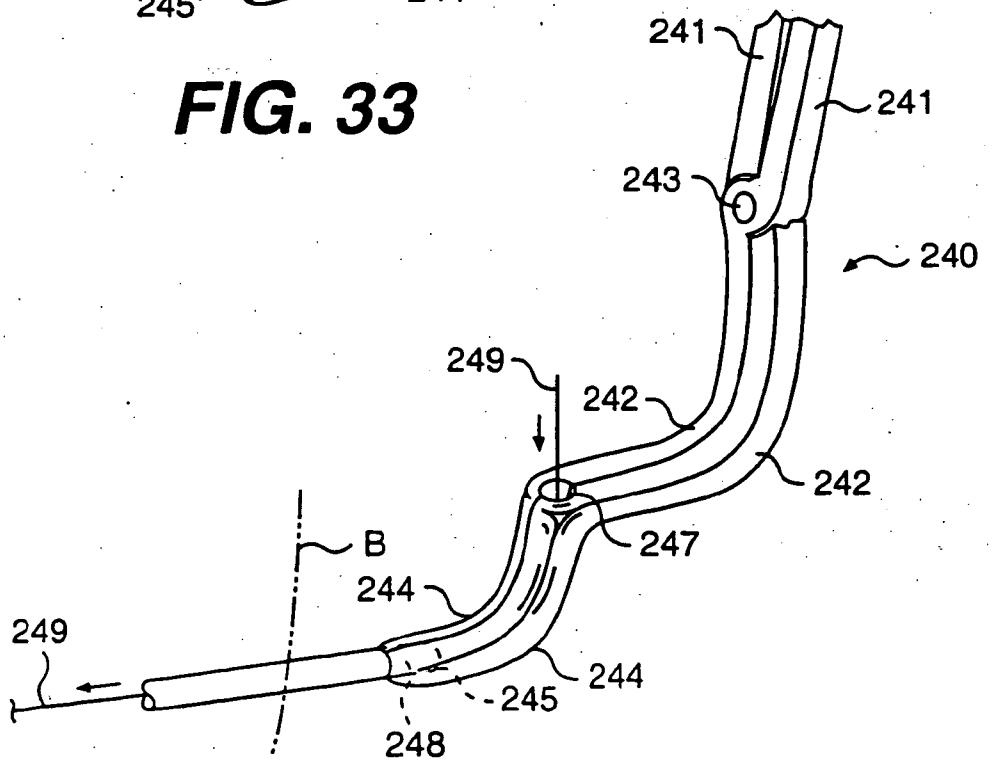
241
241
243
240
249
242
242
247
B
244
249
244
245
248

FIG. 34

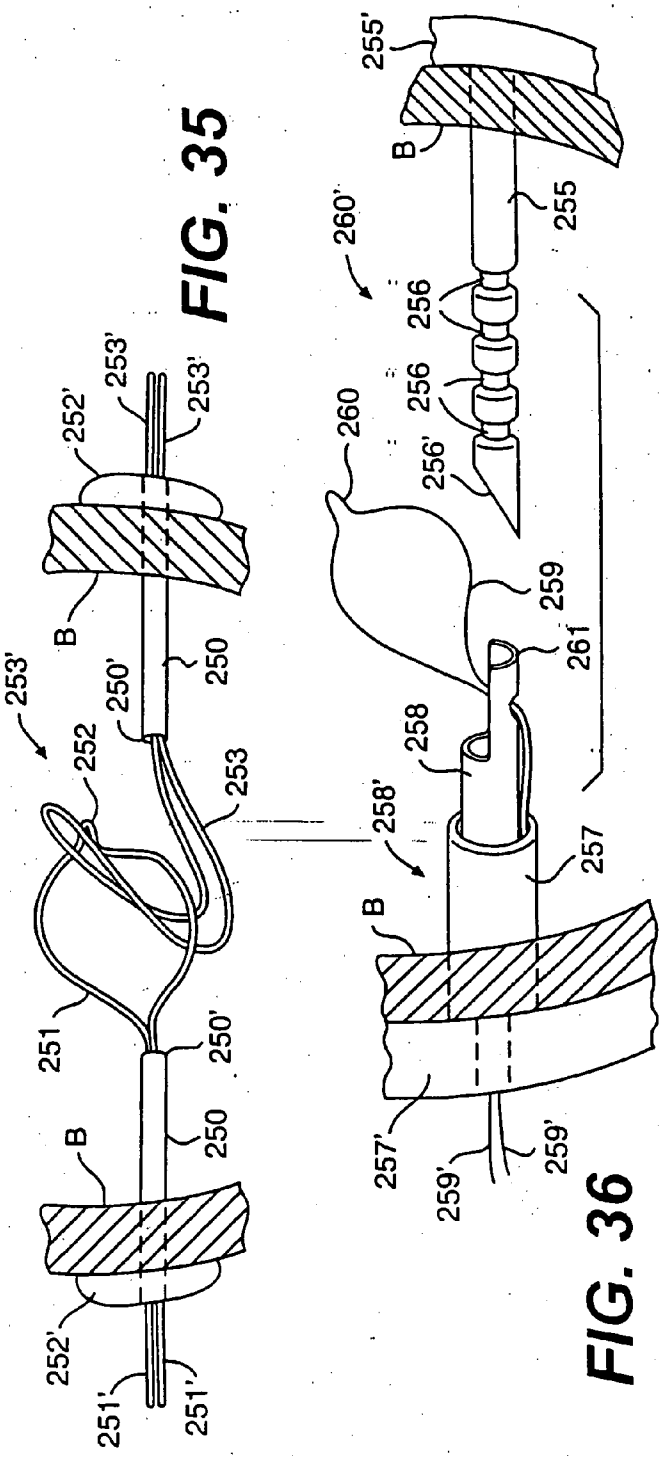

FIG. 35

FIG. 36

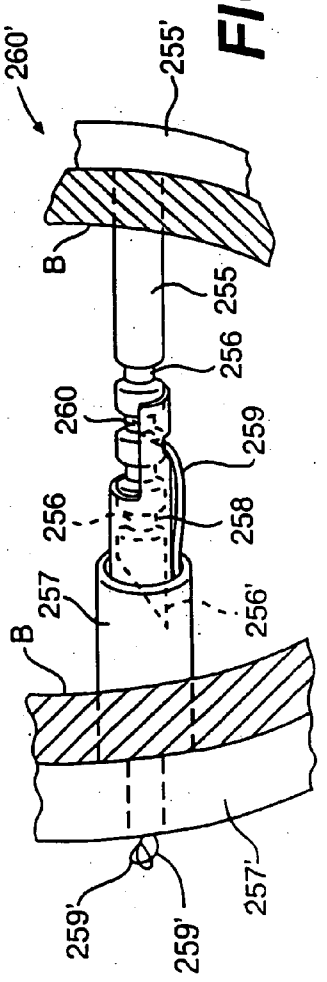

FIG. 37

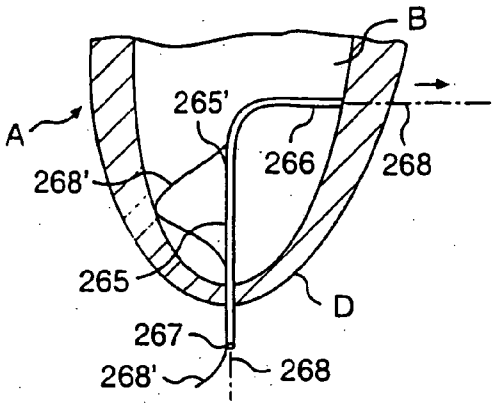

FIG. 38

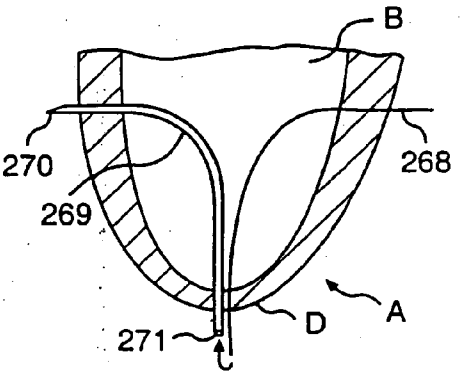

FIG. 39

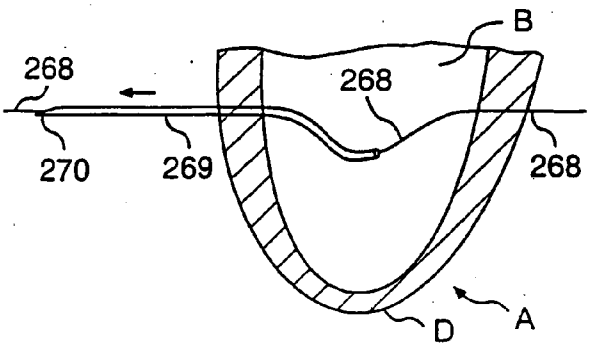

FIG. 40

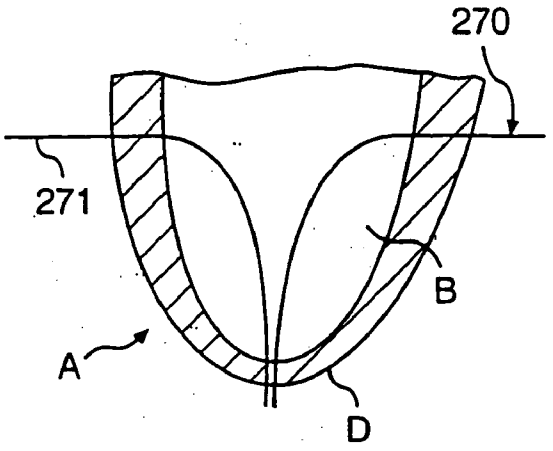

FIG. 41

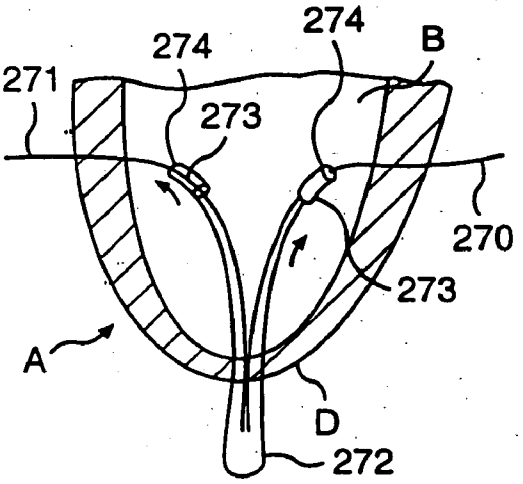

FIG. 42

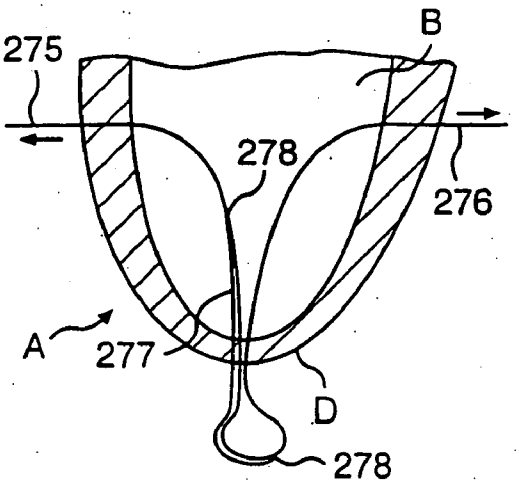

FIG. 43

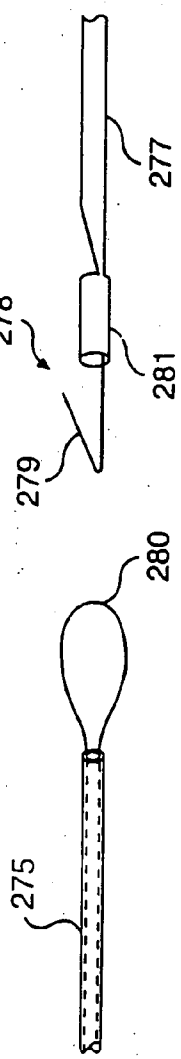

FIG 44

FIG 45

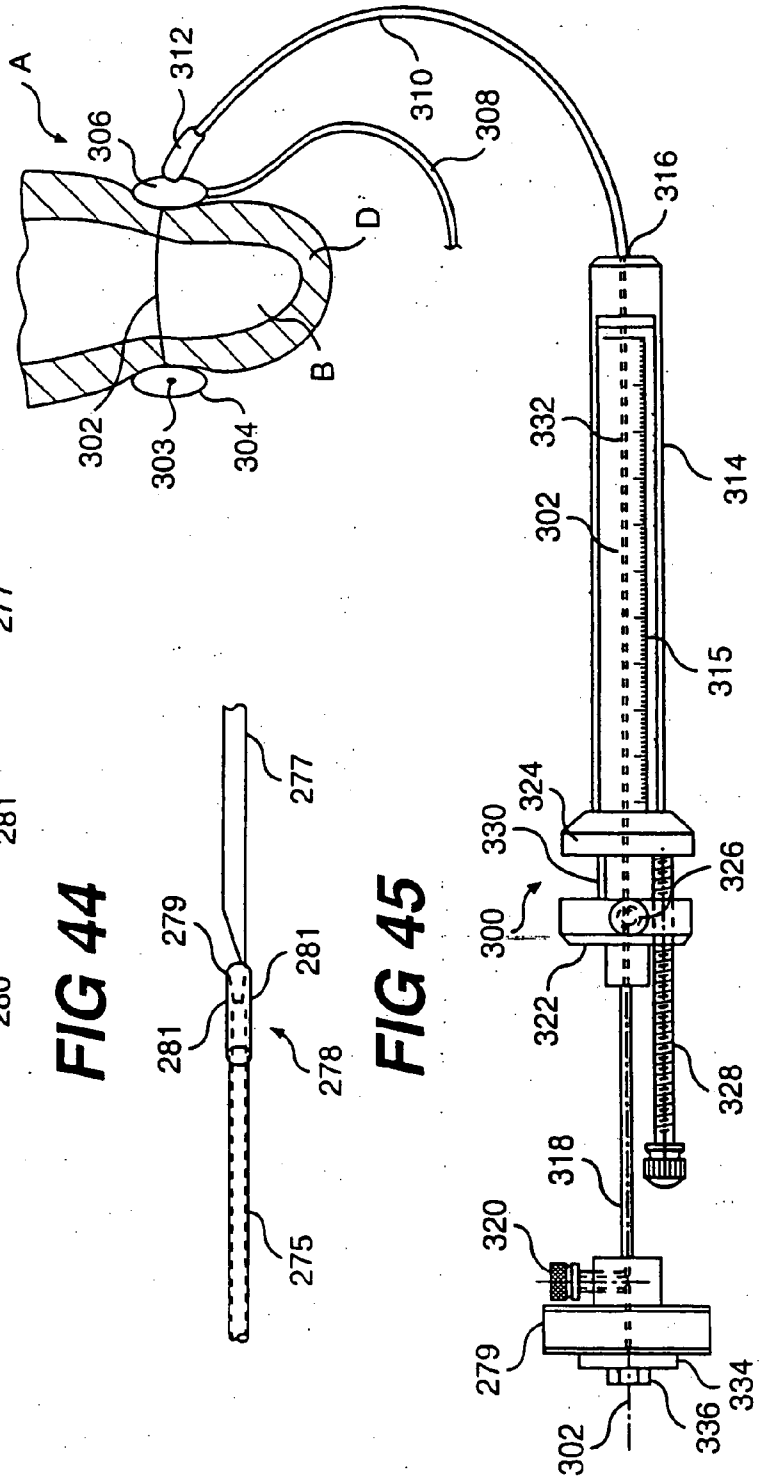

FIG 46

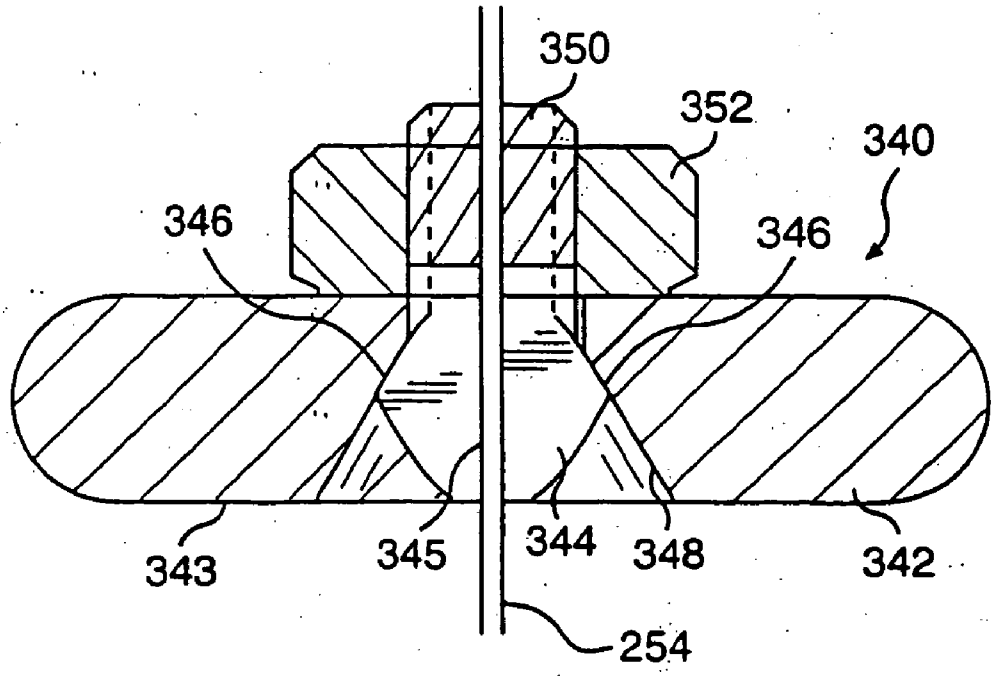
350
352
340
346
346
343
345
344
348
342
254

FIG. 47

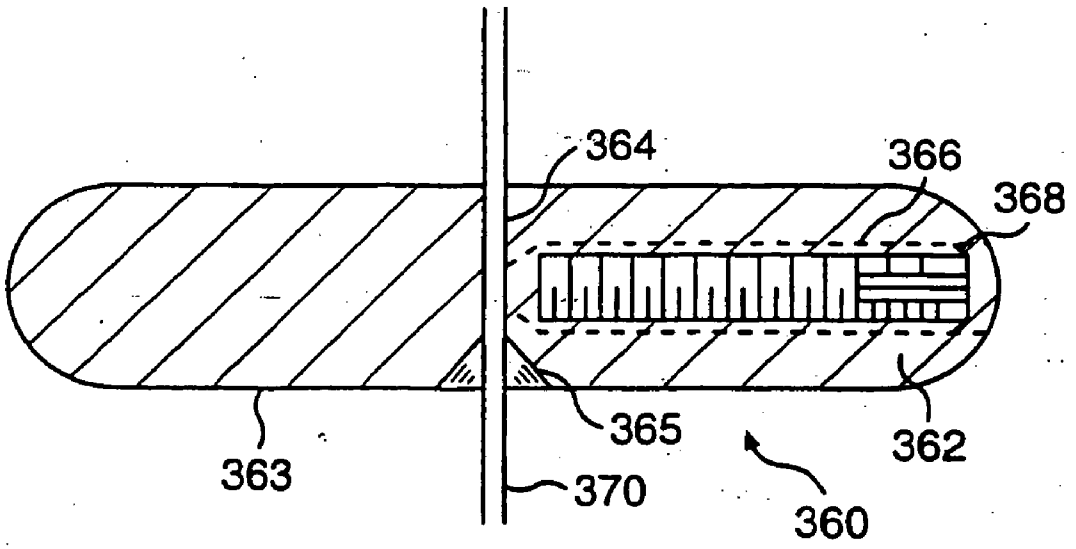
364
366
368
363
365
362
370
360

FIG. 48

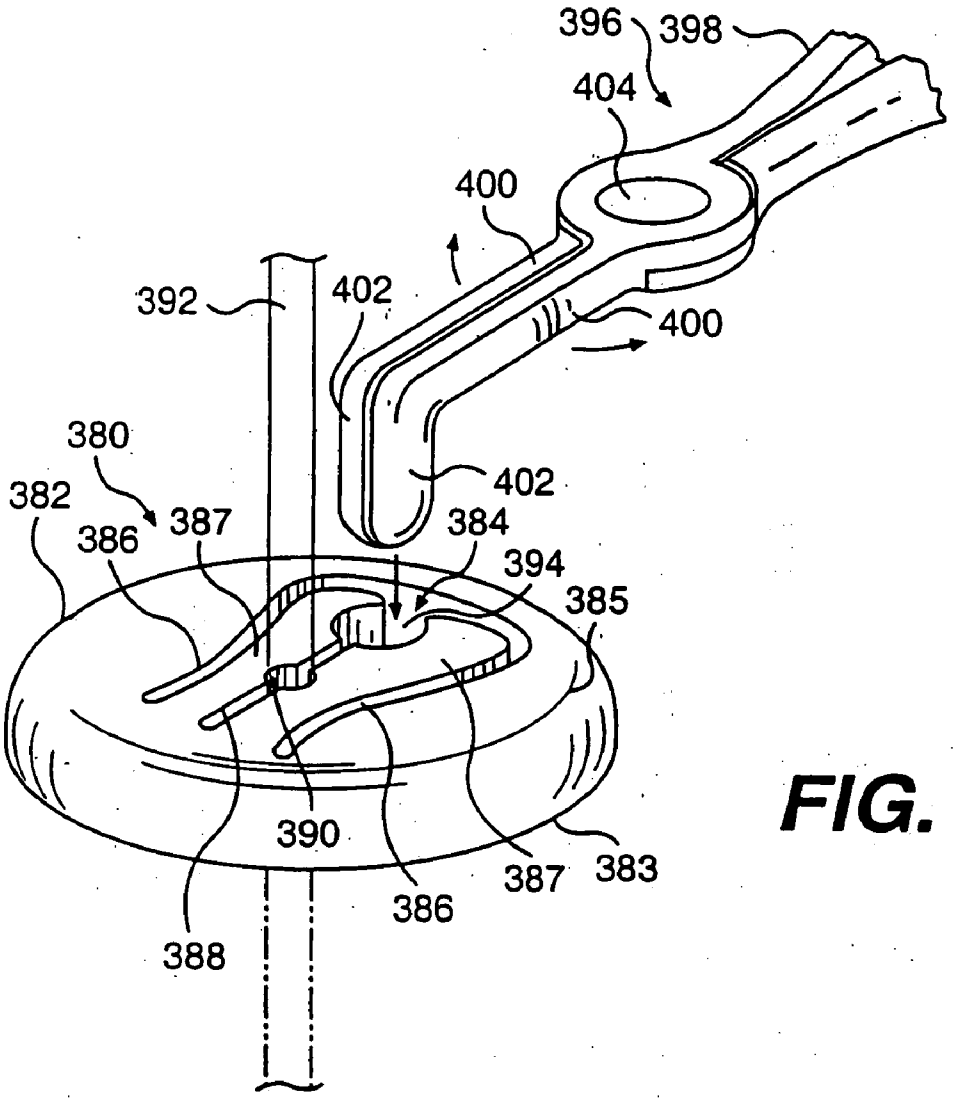
396
398
404
400
392
402
400
380
382
386
387
402
384
394
385
390
387
383
386
388

FIG. 49

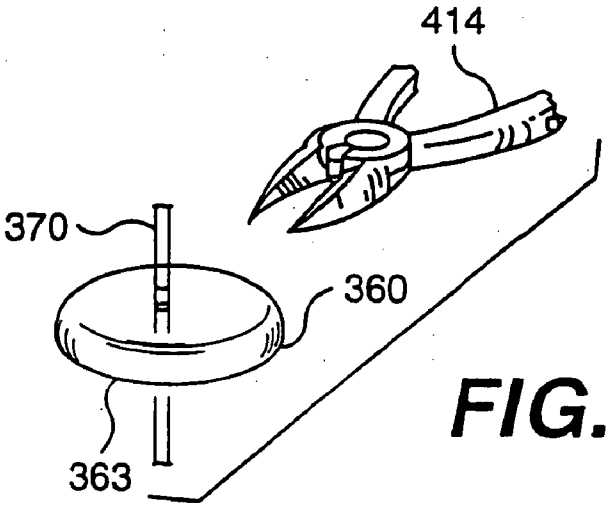
414
370
360
363

FIG. 50

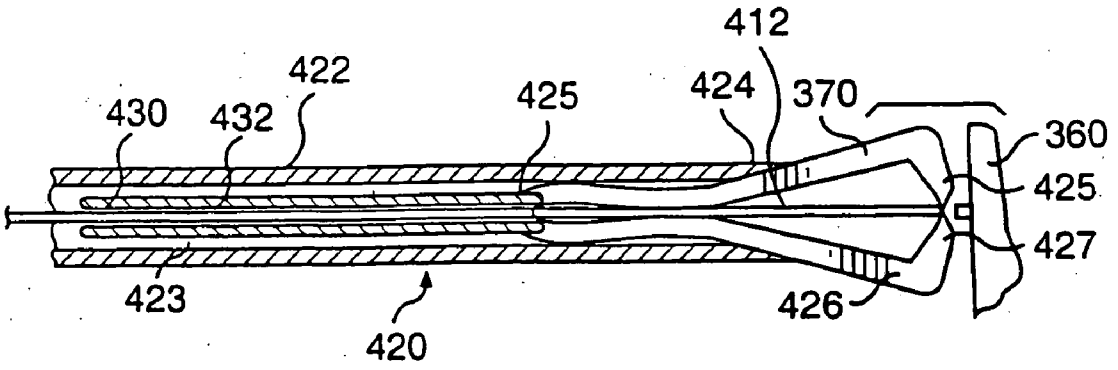
412
422
430
432
425
424
370
360
425
427
423
420
426

FIG. 51

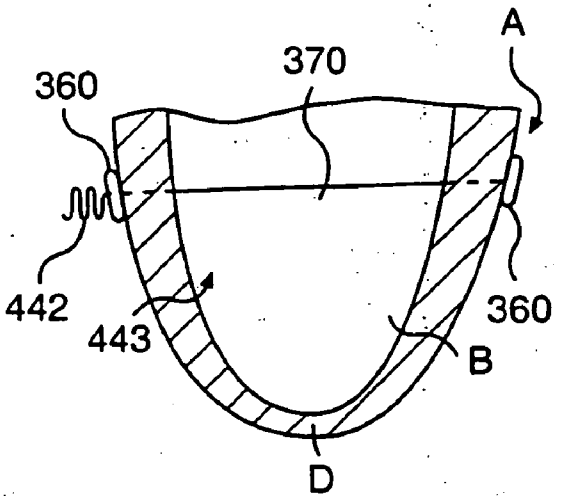
A
370
360
442
443
360
B
D

FIG. 52

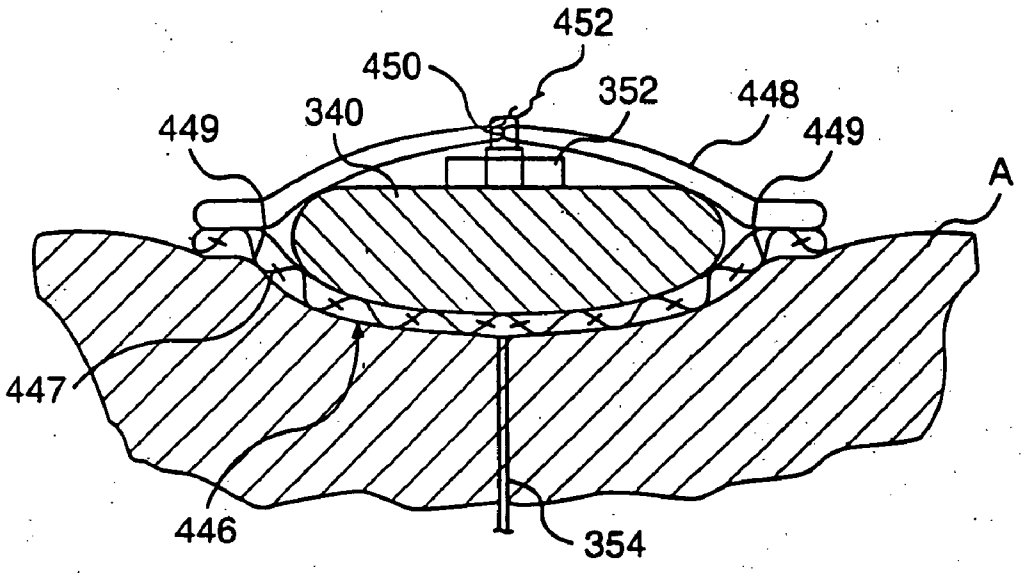

FIG. 53

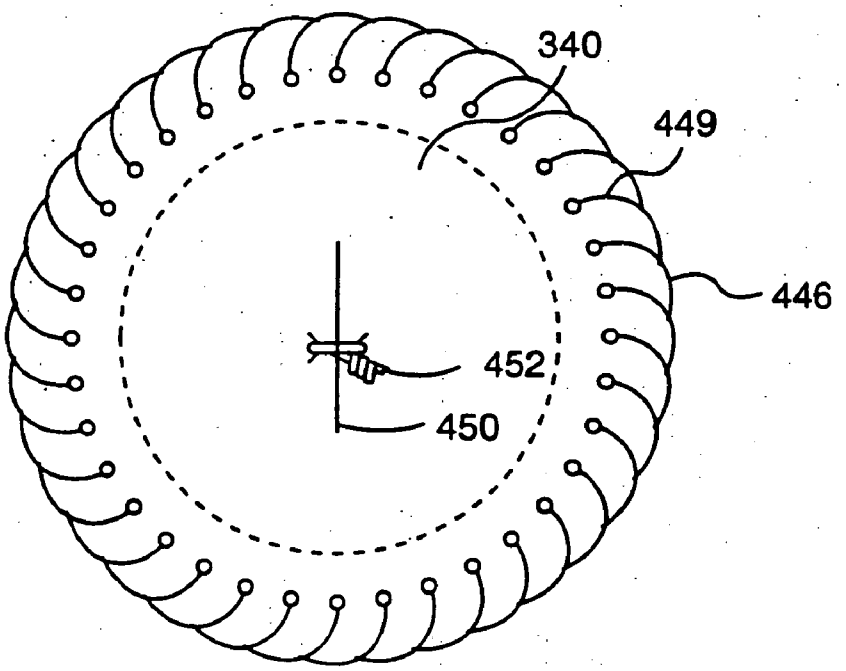

FIG. 54

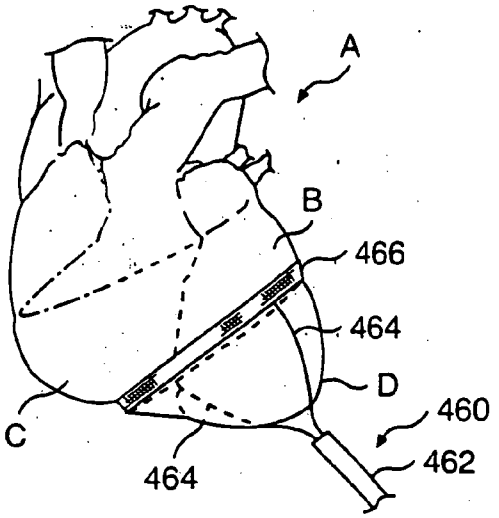

FIG. 55

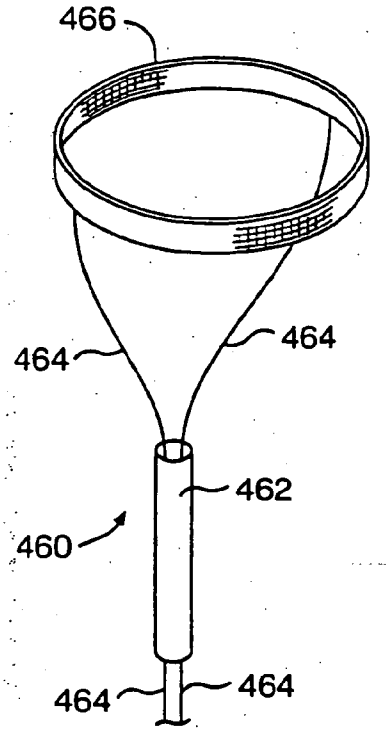

FIG. 56

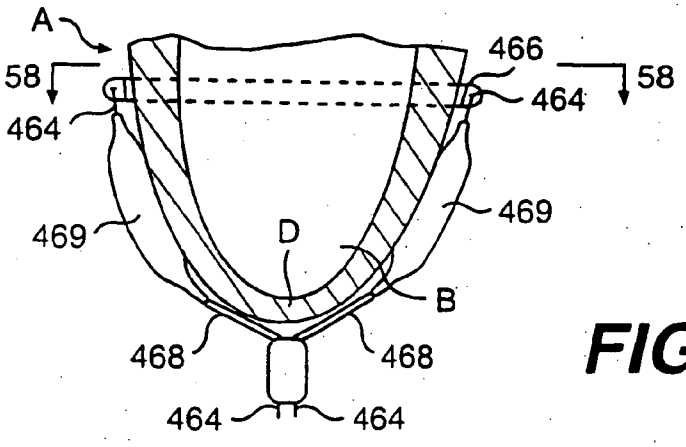

FIG. 57

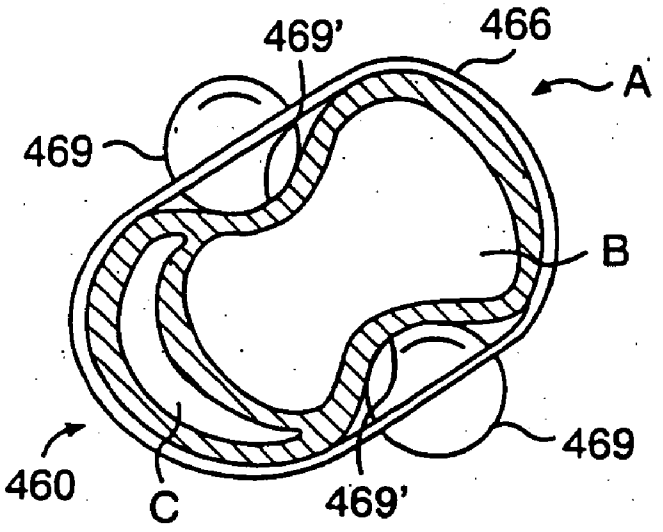
469'
466
A
469
B
469
460
C
469'

FIG. 58

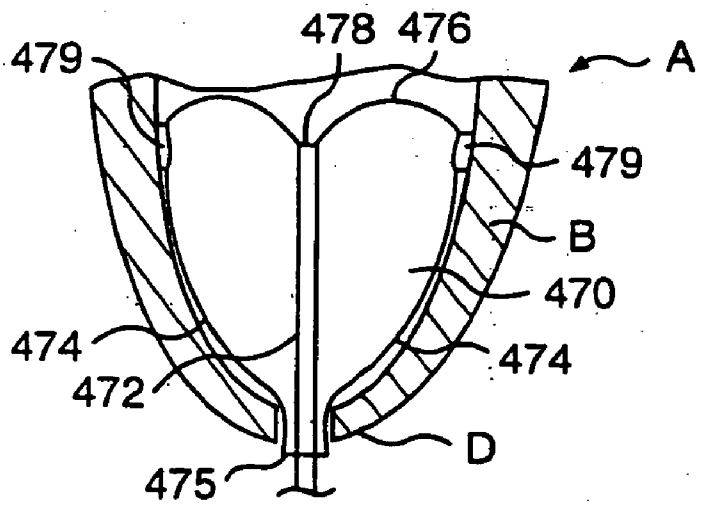
478
476
479
A
479
B
470
474
474
472
D
475

FIG. 59

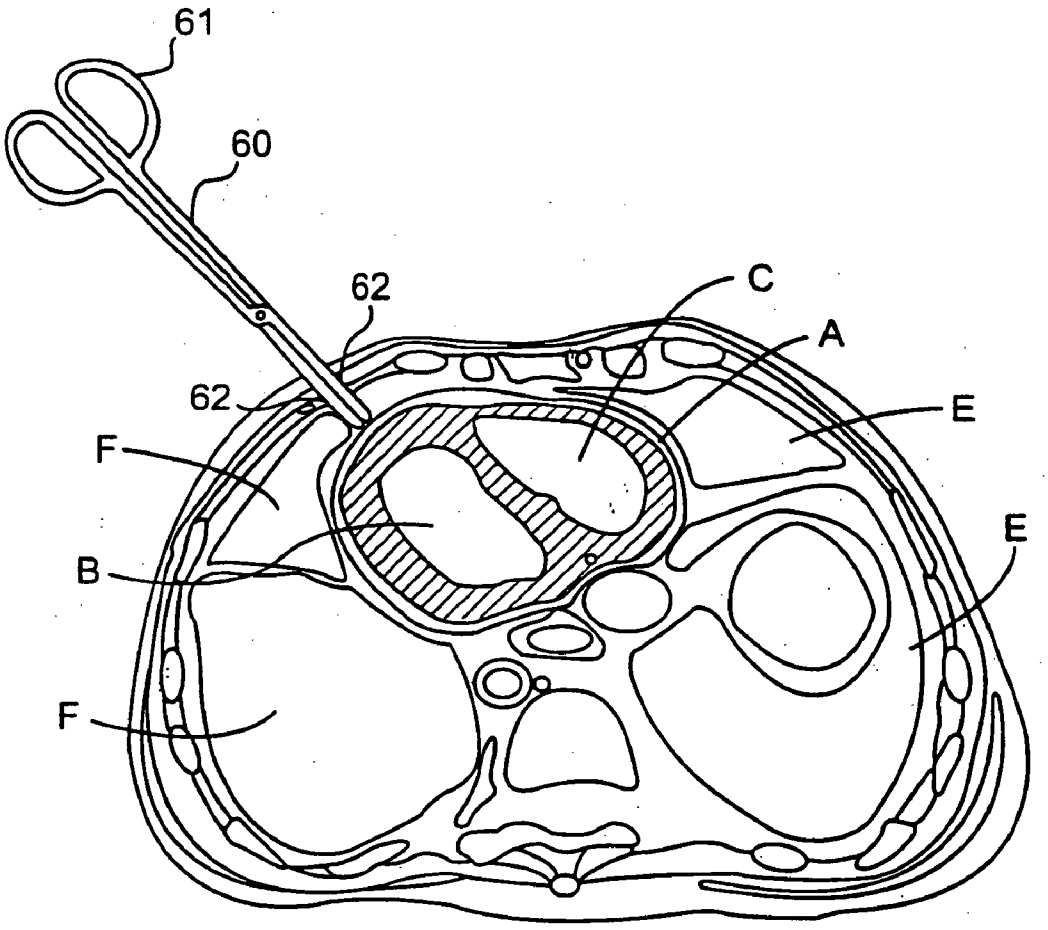

FIG. 60

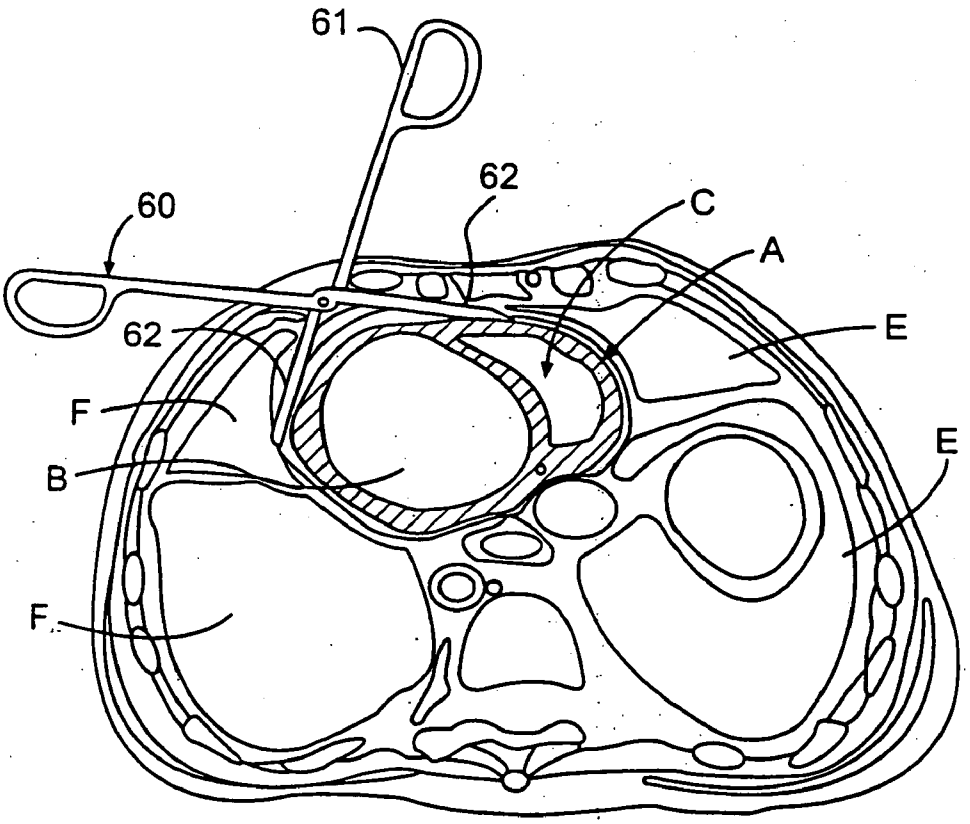

FIG. 61

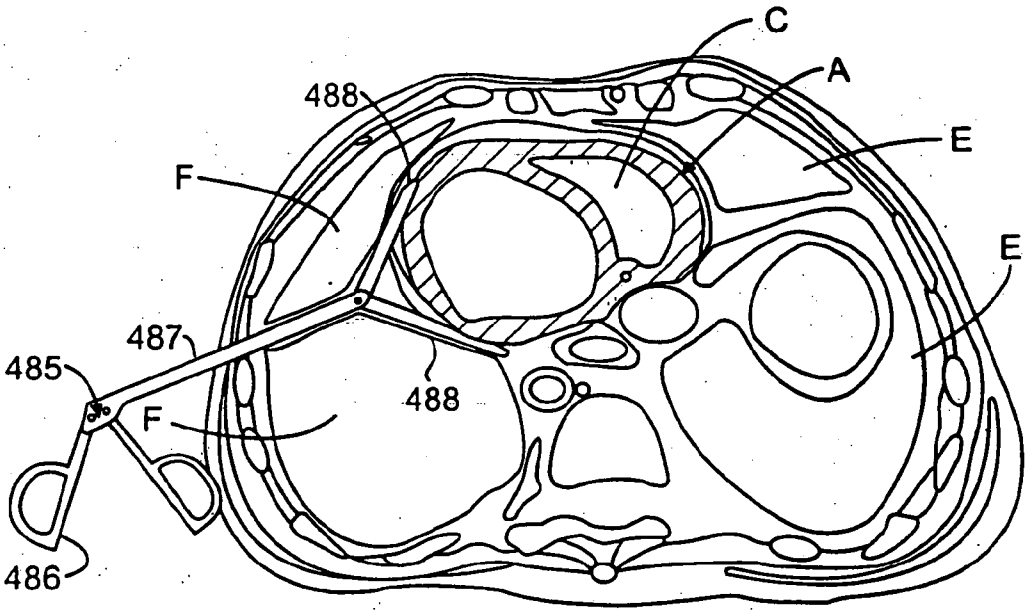

FIG. 62

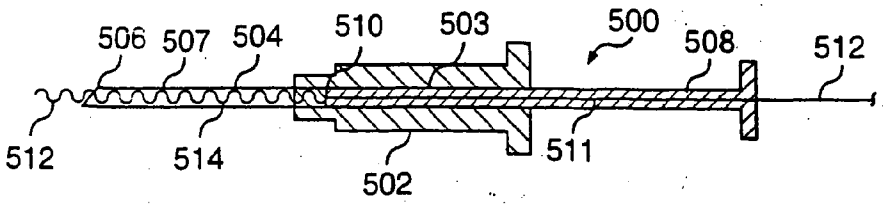

FIG. 63

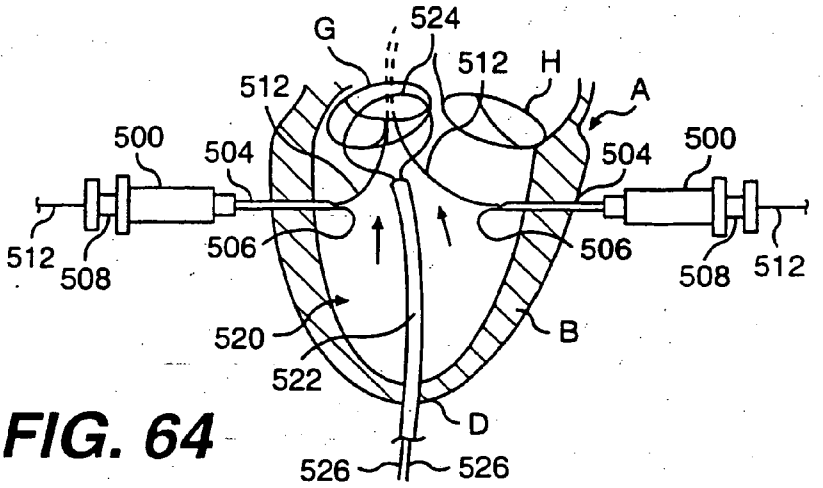

FIG. 64

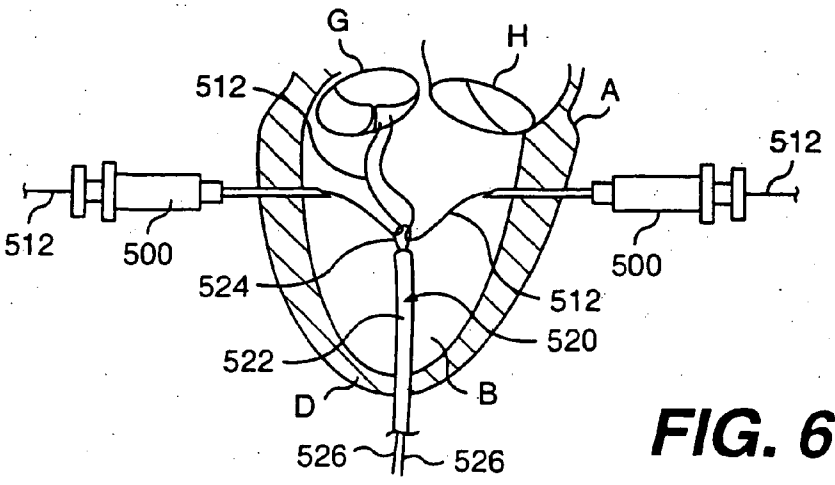

FIG. 65

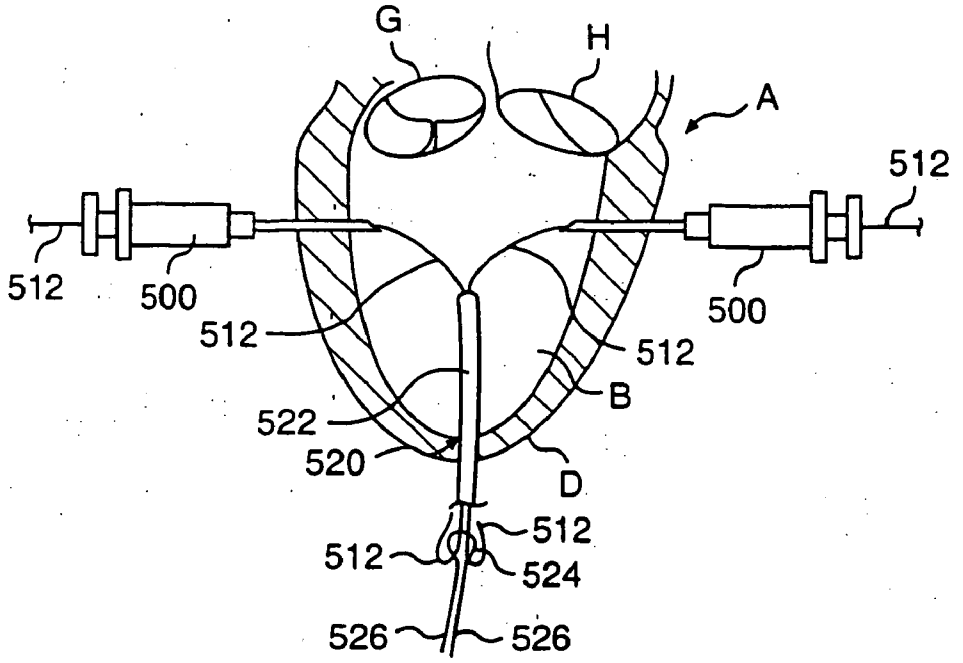
G
H
A
512
512
500
512
500
512
512
B
522
520
D
512
512
524
526
526

FIG. 66

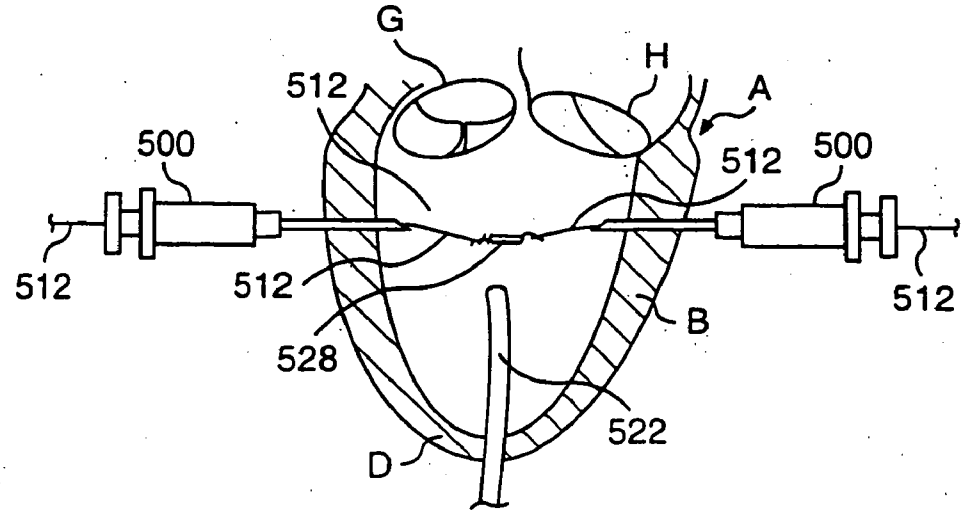
G
512
H
A
500
512
500
512
512
B
528
522
D

FIG. 67

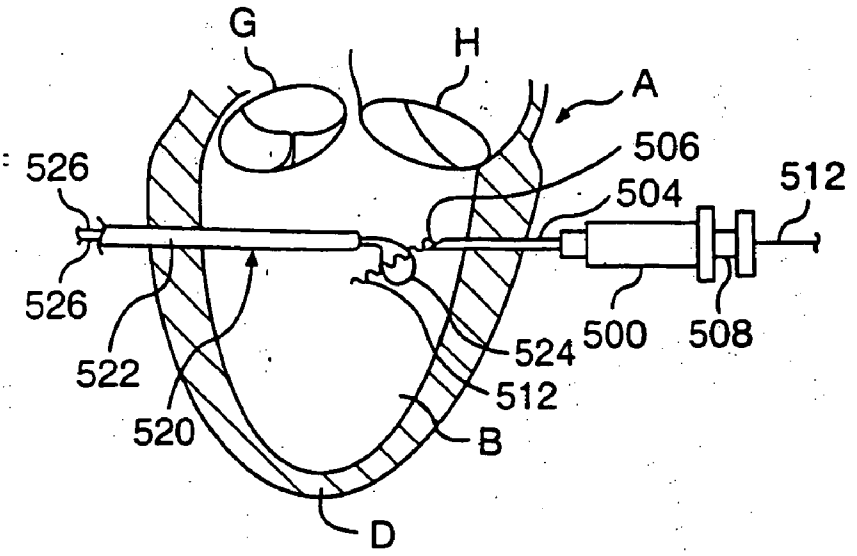
G
H
A
526
506
504
512
526
522
524
500
508
512
520
B
D

FIG. 68

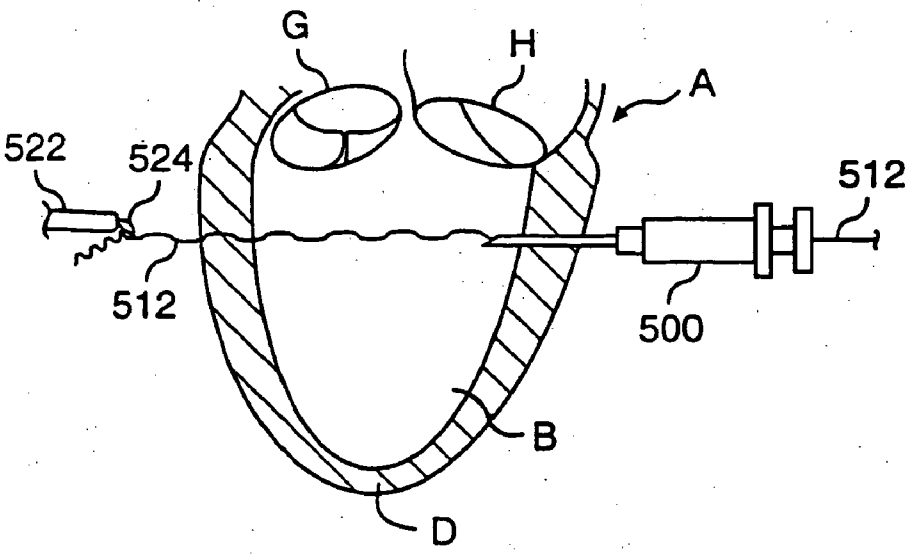
G
H
A
522
524
512
512
500
B
D

FIG. 69

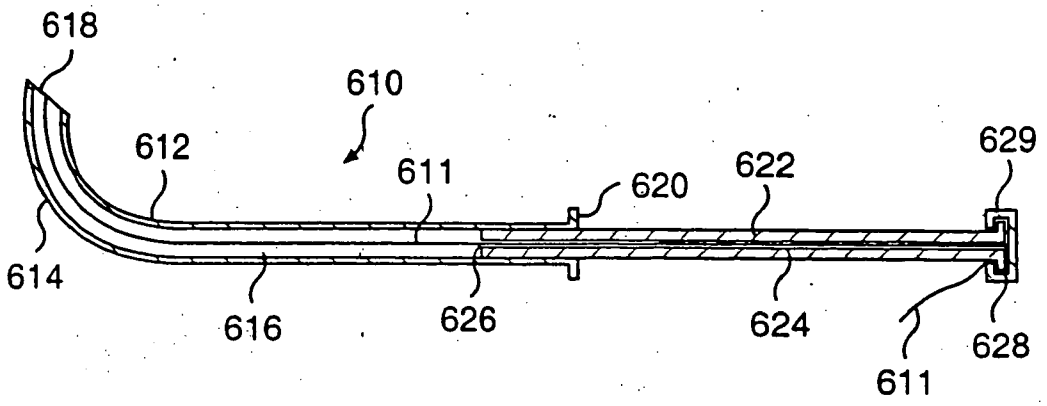
618
610
612
611
620
622
629
614
616
626
624
628
611

FIG. 70

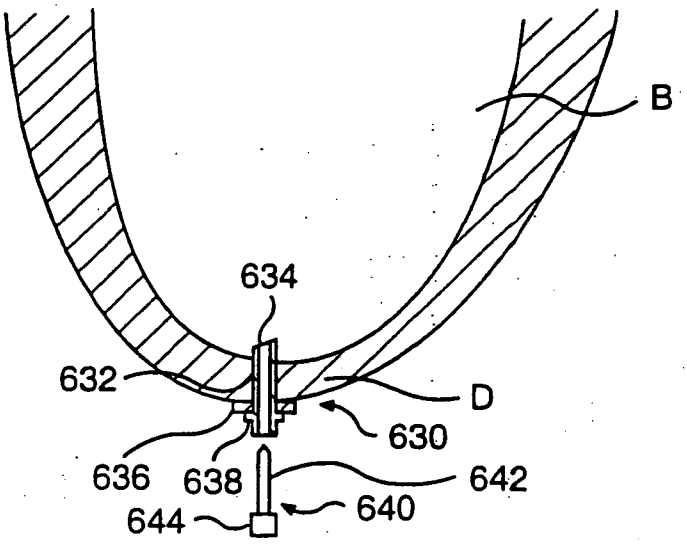
B
634
632
D
630
636
638
642
644
640

FIG. 71

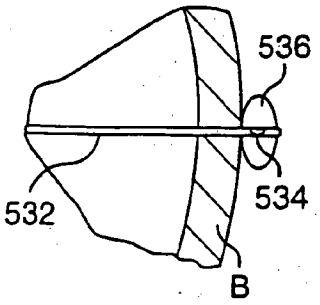

FIG. 72

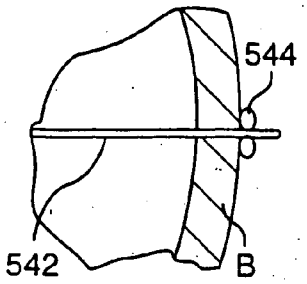

FIG. 73

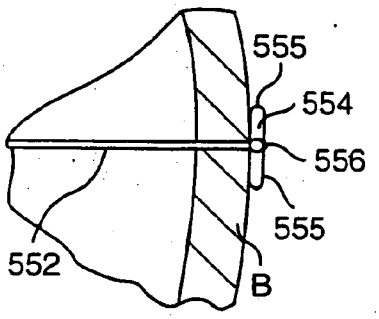

FIG. 74

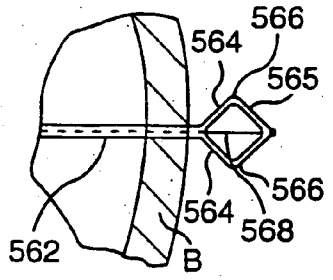

FIG. 75

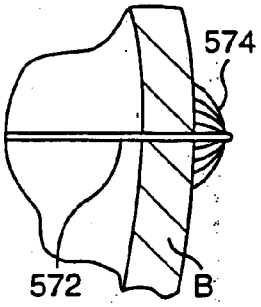

FIG. 76

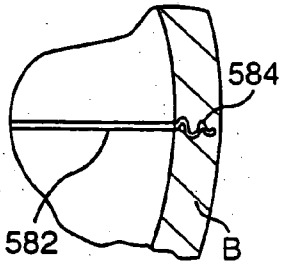

FIG. 77

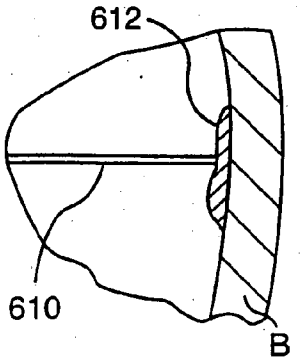

FIG. 78

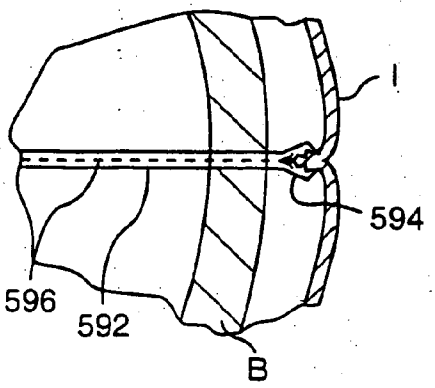

FIG. 79

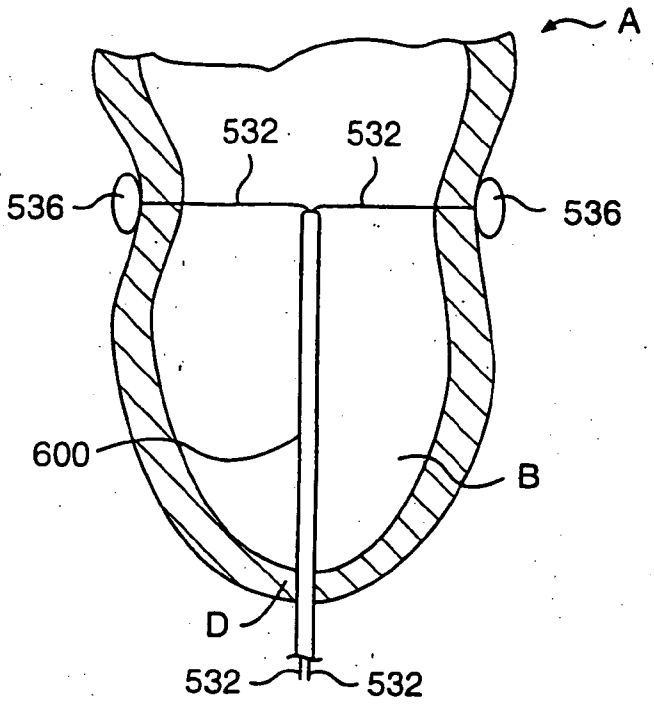

FIG. 80

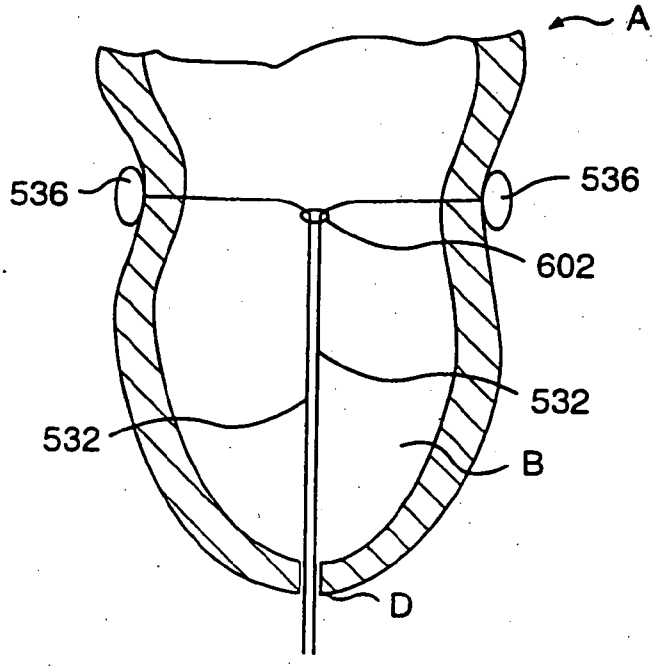

FIG. 81

TRANSVENTRICULAR IMPLANT TOOLS AND DEVICES

RELATED APPLICATIONS

[0001] This application is related to U.S. application Ser. No. _____, filed on date even herewith and entitled "Stress Apparatus and Method" and U.S. application Ser. No. _____, filed on date even herewith and entitled "Heart Wall Tension Reduction Apparatus and Method", both of which are incorporated herein by reference.

FIELD OF THE INVENTION

[0002] The present invention pertains to the field of apparatus for treatment of a failing heart. In particular, the apparatus of the present invention is directed toward implanting a device for reducing wall stress in the failing heart.

BACKGROUND OF THE INVENTION

[0003] The syndrome of heart failure is a common course for the progression of many forms of heart disease. Heart failure may be considered to be the condition in which an abnormality of cardiac function is responsible for the inability of the heart to pump blood at a rate commensurate with the requirements of the metabolizing tissues, or can do so only at an abnormally elevated filling pressure. There are many specific disease processes that can lead to heart failure with a resulting difference in pathophysiology of the failing heart, such as the dilatation of the left ventricular chamber. Etiologies that can lead to this form of failure include idiopathic cardiomyopathy, viral cardiomyopathy, and ischemic cardiomyopathy.

[0004] The process of ventricular dilatation is generally the result of chronic volume overload or specific damage to the myocardium. In a normal heart that is exposed to long term increased cardiac output requirements, for example, that of an athlete, there is an adaptive process of ventricular dilation and myocyte hypertrophy. In this way, the heart fully compensates for the increased cardiac output requirements. With damage to the myocardium or chronic volume overload, however, there are increased requirements put on the contracting myocardium to such a level that this compensated state is never achieved and the heart continues to dilate.

[0005] The basic problem with a large dilated left ventricle is that there is a significant increase in wall tension and/or stress both during diastolic filling and during systolic contraction. In a normal heart, the adaptation of muscle hypertrophy (thickening) and ventricular dilatation maintain a fairly constant wall tension for systolic contraction. However, in a failing heart, the ongoing dilatation is greater than the hypertrophy and the result is a rising wall tension requirement for systolic contraction. This is felt to be an ongoing insult to the muscle myocyte resulting in further muscle damage. The increase in wall stress is also true for diastolic filling. Additionally, because of the lack of cardiac output, there is generally a rise in ventricular filling pressure from several physiologic mechanisms. Moreover, in diastole there is both a diameter increase and a pressure increase over normal, both contributing to higher wall stress levels. The increase in diastolic wall stress is felt to be the primary contributor to ongoing dilatation of the chamber.

[0006] Prior art treatments for heart failure fall into three generally categories. The first being pharmacological, for example, diuretics. The second being assist systems, for example, pumps. Finally, surgical treatments have been experimented with, which are described in more detail below.

[0007] With respect to pharmacological treatments, diuretics have been used to reduce the workload of the heart by reducing blood volume and preload. Clinically, preload is defined in several ways including left ventricular end diastolic pressure (LVEDP), or left ventricular end diastolic volume (LVEDV). Physiologically, the preferred definition is the length of stretch of the sarcomere at end diastole. Diuretics reduce extra cellular fluid which builds in congestive heart failure patients increasing preload conditions. Nitrates, arteriolar vasodilators, angiotensin converting enzyme inhibitors have been used to treat heart failure through the reduction of cardiac workload through the reduction of afterload. Afterload may be defined as the tension or stress required in the wall of the ventricle during ejection. Inotropes such as digoxin are cardiac glycosides and function to increase cardiac output by increasing the force and speed of cardiac muscle contraction. These drug therapies offer some beneficial effects but do not stop the progression of the disease.

[0008] Assist devices include, for example, mechanical pumps. Mechanical pumps reduce the load on the heart by performing all or part of the pumping function normally done by the heart. Currently, mechanical pumps are used to sustain the patient while a donor heart for transplantation becomes available for the patient.

[0009] There are at least three surgical procedures for treatment of heart failure: 1) heart transplant; 2) dynamic cardiomyoplasty; and 3) the Batista partial left ventriculectomy. Heart transplantation has serious limitations including restricted availability of organs and adverse effects of immunosuppressive therapies required following heart transplantation. Cardiomyoplasty includes wrapping the heart with skeletal muscle and electrically stimulating the muscle to contract synchronously with the heart in order to help the pumping function of the heart. The Batista partial left ventriculectomy includes surgically remodeling the left ventricle by removing a segment of the muscular wall. This procedure reduces the diameter of the dilated heart, which in turn reduces the loading of the heart. However, this extremely invasive procedure reduces muscle mass of the heart.

SUMMARY OF THE INVENTION

[0010] The present invention relates to methods and devices for placing a transventricular splint to reduce mechanical heart wall muscle stress. Heart wall muscle stress is a stimulus for the initiation and progressive enlargement of the left ventricle in heart failure. Although the primary focus of the methods of the present invention is heart failure and thus placement of a splint on the left ventricle, the methods and devices of the present invention could be used to place a splint or reduce stress in the heart's other chambers.

[0011] The transventricular splints placed by the tools and methods of the present invention can reduce heart wall stress throughout the cardiac cycle including end diastole and end

systole. Alternately, they can be used to reduce wall stress during the portions of the cardiac cycle not including end systole. The splints which operate throughout the cardiac cycle are referred to herein as "full cycle splints". Those splints which do not operate to reduce wall stress during end systole are referred to as "restrictive devices" or, more specifically, "restrictive splints". Splints reduce left ventricle wall stress by altering the geometric shape of the left ventricle.

[0012] In the preferred embodiment of the present invention, tools are provided to interconnect oppositely disposed ventricular walls by a transventricular splint, including a tension member and anchors disposed on opposite ends of the tension member. First access is gained to the heart either by opening a patient's chest or less invasively by port or trocar. The points on the ventricular walls to be interconnected by the splint are then identified. The locations are preferably marked. The tension member is then placed to extend between the marked locations. The distance between the marked location is preferably measured. The wall of the ventricles are drawn toward each other. The anchors are secured to the tension member. The tension member is trimmed or cut to size in view of the relative spacing of the anchors. The anchors are then secured to the heart.

[0013] In this manner, portions of the walls of the ventricle are fixed in a drawn position reducing the radius of curvature of the majority of the ventricle and thereby reducing the tension within the ventricle wall.

BRIEF DESCRIPTION OF THE FIGURES

[0014] Referring now to the drawings wherein like reference numerals refer to like elements throughout the several views, **FIG. 1** is a cross sectional view of the left ventricle including a transventricular splint;

[0015] **FIG. 1A** is a generally horizontal cross sectional view of a left ventricle including the transventricular splint of **FIG. 1**;

[0016] **FIG. 2** is an exterior view of the heart of **FIG. 1** and anchor pad of the transventricular splint;

[0017] **FIG. 3** is a location device with bars;

[0018] **FIG. 4** is an exterior view of a heart including the location device of **FIG. 3**;

[0019] **FIG. 5** is a hand including a finger echo locator device;

[0020] **FIG. 6** is a top view of the echo locator device of **FIG. 5**;

[0021] **FIG. 7** is a side view of the echo locator device of **FIG. 6**;

[0022] **FIG. 8** is a side view of a balloon locator device;

[0023] **FIG. 9** is a side view of balloon locator device with balloon inflated;

[0024] **FIG. 10** is a view of a mechanical locator disposed within and outside of a left ventricle;

[0025] **FIG. 11** is a clamp locator device;

[0026] **FIG. 12** is a view of the device of **FIG. 11** disposed on a left ventricle;

[0027] **FIG. 13** is a view of an alignment tool;

[0028] **FIG. 14** is a view of an alternative alignment tool;

[0029] **FIG. 15** is yet another alternative alignment tool;

[0030] **FIG. 15A** is a detail of the alignment tool of **FIG. 15**;

[0031] **FIG. 16** is a cross sectional view of an alignment tool pad with stabilizing apparatus;

[0032] **FIG. 17** is a side view of an alternate embodiment of an alignment device pad with stabilizing apparatus;

[0033] **FIG. 18** is a perspective view of an alignment device pad;

[0034] **FIG. 19** is a perspective view of an alternate embodiment of an alignment device pad;

[0035] **FIG. 20** is yet another alternate embodiment of an alignment device receiving pad;

[0036] **FIG. 21** is a perspective view of an alignment device guide tube;

[0037] **FIG. 22** is a side view of a splint delivery guide;

[0038] **FIG. 23** is an alternate embodiment of a splint delivery guide;

[0039] **FIG. 24** is an alternate embodiment of a stylet;

[0040] **FIG. 25** is yet another alternate embodiment of a stylet including a retractable sheath in a retracted position;

[0041] **FIG. 26** is a view of the stylet of **FIG. 25** showing the sheath covering the tip of the stylet;

[0042] **FIG. 27** is a yet another alternate embodiment of a stylet including a balloon disposed proximate the tip;

[0043] **FIG. 28** is a view of the stylet of **FIG. 27** wherein the balloon is inflated to cover the tip of the stylet;

[0044] **FIG. 29** is a view of yet another alternate embodiment of a splint delivery guide including an optical fiber;

[0045] **FIG. 30** is a view of the tip of the guide of **FIG. 29**;

[0046] **FIG. 31** is an alternate embodiment of a guide including an optical fiber;

[0047] **FIG. 32** is a view of yet another alternate embodiment of a guide including an optical fiber;

[0048] **FIG. 33** is a perspective view of a guide clamp;

[0049] **FIG. 34** is a perspective view of a wire guide clamp connected to a delivery tube;

[0050] **FIG. 35** is a view of an alternate embodiment of a splint and delivery device;

[0051] **FIG. 36** is a view of yet another alternate embodiment of a splint and delivery device;

[0052] **FIG. 37** is a view of the device of **FIG. 36** connected in a left ventricle;

[0053] **FIG. 38** is a tension member delivery catheter shown in a left ventricle;

[0054] **FIG. 39** is a view of a hypotube placed in the left ventricle using the catheter of **FIG. 38**;

[0055] **FIG. 40** is a view of the hypotube of **FIG. 39** being removed from the left ventricle;

[0056] **FIG. 41** is a view of two guide members placed in the left ventricle using the catheter of **FIG. 38**;

[0057] **FIG. 42** is a view of a tension member being advanced over the guide members of **FIG. 41**;

[0058] **FIG. 43** is a view of a tension member and leads placed in a left ventricle using the catheter of **FIG. 38**;

[0059] **FIG. 44** is a view of a connector for connecting the lead and tension member of **FIG. 43**;

[0060] **FIG. 45** is a view of the connector of **FIG. 44** connecting a lead and tension member;

[0061] **FIG. 46** is a view of the tension member measuring and tightening device;

[0062] **FIG. 47** is a cross sectional view of an anchor pad;

[0063] **FIG. 48** is a cross sectional view of an alternate anchor pad;

[0064] **FIG. 49** is a perspective view of yet another alternate embodiment of an anchor pad including an anchor pad loosening device;

[0065] **FIG. 50** is a perspective view of a tension member clip;

[0066] **FIG. 51** is a cross sectional view of an alternate embodiment of the tension member clip;

[0067] **FIG. 52** is a cross sectional view of a heart including a tension member having a heat set end;

[0068] **FIG. 53** is a cross sectional view of a pad including an anchor envelope;

[0069] **FIG. 54** shows the envelope of **FIG. 53**;

[0070] **FIG. 55** is a view of a heart including a external locating device;

[0071] **FIG. 56** is a perspective view of the external locating device of **FIG. 55**;

[0072] **FIG. 57** is a cross sectional view of the locating device of **FIG. 55** including inflated locating balloons;

[0073] **FIG. 58** is a transverse cross section of **FIG. 57**;

[0074] **FIG. 59** is a vertical cross section of the heart including an internal locating device;

[0075] **FIG. 60** is a cross section of a torso taken through the left and right ventricles including a locating clamp;

[0076] **FIG. 61** is a view of the locating clamp of **FIG. 60**;

[0077] **FIG. 62** is a view of an alternate embodiment of a marking clamp;

[0078] **FIG. 63** is a cross sectional view of a thread pusher;

[0079] **FIG. 64** is a cross sectional view of the left ventricle including two thread pushers and a snare;

[0080] **FIG. 65** is a subsequent view of the devices of **FIG. 64**;

[0081] **FIG. 66** is a subsequent view of the device of **FIG. 65**;

[0082] **FIG. 67** is a subsequent view of the device of **FIG. 66**;

[0083] **FIG. 68** is a cross sectional view of a left ventricle including a snare and thread pusher;

[0084] **FIG. 69** is a subsequent view of the device of **FIG. 68**;

[0085] **FIG. 70** is a cross sectional view of an alternate embodiment of a thread pusher;

[0086] **FIG. 71** is a cross sectional view of a snare insertion tube;

[0087] **FIG. 72** is yet another alternate anchor pad embodiment;

[0088] **FIG. 73** is yet another alternate anchor pad embodiment;

[0089] **FIG. 74** is yet another alternate anchor pad embodiment;

[0090] **FIG. 75** is yet another alternate anchor pad embodiment;

[0091] **FIG. 76** is yet another alternate anchor pad embodiment;

[0092] **FIG. 77** is a view of an anchor screw;.

[0093] **FIG. 78** is a view of yet another alternate anchor pad embodiment;

[0094] **FIG. 79** is a view of an anchor epicardial jaw embodiment;

[0095] **FIG. 80** is vertical cross sectional view of the heart including anchors deployed from within the heart; and

[0096] **FIG. 81** is a vertical cross sectional view of a heart showing tension members deployed from within the heart connected within the heart.

DETAILED DESCRIPTION OF THE INVENTION

[0097] The present invention relates to methods and tools for implanting a transventricular splint. The transventricular splint reduces heart wall stress by changing ventricular geometry. A splint can be full cycle or restrictive. If a splint is full cycle, it engages, i.e., alters the generally globular ventricular shape throughout the cardiac cycle. If the splint is restrictive, it does not change the generally globular shape of the ventricle at end systole.

[0098] **FIG. 1** is a vertical cross sectional view of a left ventricle view, B of a heart A. A typical transventricular splint **10** is disposed across ventricle B. Splint **10** includes a tension member **12**. Connected to opposite ends of tension member **12** are anchors **14**. Anchors **14** engage the walls of ventricle B to create a shape change either full cycle or restrictively. **FIG. 1A** is a horizontal cross sectional view of left ventricle B taken from **FIG. 1** showing left ventricle B in a bi-lobe shape as a result of the implantation of splint **10**. **FIG. 2** is a vertical exterior view of heart A showing splint **10**, one end of tension member **12** and an anchor **14**.

[0099] In a preferred method of implanting a transventricular splint, access is gained to the heart. The entry and/or exit points for the splint's tension member are identified. These locations are preferably marked. The tension member

is then delivered transventricularly either from outside the heart to the inside, or from the inside of the heart to the outside. The anchors are delivered or deployed. The epicardial length is preferably measured to calibrate the magnitude of the shape change, tension member length, and thus heart wall stress reduction. The magnitude of the stress reduction is a function of the tension member length. (See U.S. patent application Ser. No. 08/933,456, filed Sep. 18, 1997 and incorporated herein by reference.) The heart walls are then drawn together by adjusting the tension member length and/or anchor spacing. The heart walls are drawn toward each other in view of the desired tension member length. The anchors are secured to maintain the length of the tension member. Preferably any portion of the tension member not lying between the anchors is removed. The anchors are preferably secured to the heart to limit relative movement between the anchors and the heart.

[0100] Some of the devices and methods disclosed in this application lend themselves to open chest procedures, whereas others lend themselves either to open chest procedures or less invasive procedures. Various cardiac surgical procedures are being done via partial thoracotomy between ribs. Thoroscopes and trocars are often utilized. Certain embodiments of the invention are amenable to these types of less invasive surgery. As is known to one skilled in the art, ports, windows and trocars are available to access the heart to limit patient trauma relative to open chest procedures. One or more access sites can be used during a less invasive procedure to gain access to the heart through the chest wall from a left lateral direction, right lateral direction, anterior and/or posterior direction. For example, during a less invasive splint implantation procedure, opposite ends of a tension member can be accessed by left and right lateral ports, where an anterior port is used to deliver the tension member. During less invasive procedures, the surgeon's hands preferably remain outside of the patient's body.

[0101] When gaining access to the heart by way of a window trocar, both the diaphragm and lungs should be avoided. If the lungs are an obstruction to placement of the trocar and tension member, in some instances they may be moved without deflation. In yet other instances, if the lungs are substantially disposed between the selected chest access point and the heart, the patient may be placed on heart lung bi-pass and the patient's lungs deflated. Ventilation with or without deflation of the lungs may be desirable.

[0102] Once access to the heart through the chest wall has been gained, the splint placement location should be determined. Determining the desirable location of the splint is important to the performance and safety of the device. It is desirable to avoid external structures such as coronary vessels to avoid negatively effecting the perfusion of blood through the heart wall muscle. It is also desirable to avoid internal structures such as valve apparatus including chordae. To determine where to place the splint, the heart can be viewed with the naked eye, echo imaging, echo transesophageally or epicardially and fluoroscopy. Various devices can be used to locate entry or exit points by echo imaging or fluoroscopy.

[0103] **FIG. 3** is a perspective view of a locating device **20** including two knurled bars **22** interconnected by an elastic member **24**. **FIG. 4** is a view of a heart A including a left ventricle B and right ventricle C. Device **20** is shown disposed on left ventricle B. Bars **22** can be echo imaged or viewed by fluoroscopy simultaneously with the left ventricle. When viewed by fluoroscopy, coronary vessels can be advantageously visualized by introducing contrast medium therein. Additionally, bars **22** should be made from a substantially radiopaque material if used for fluoroscopic imaging.

[0104] In use, bars **22** are placed on heart A as shown in **FIG. 4**. Bars **22** appear to be positioned such that the coronary vessels and internal structures would be avoided, were the tension member to be extended through the heart between the location of bars **22**. The location of the bars can be the location of the splint tension member. If not, the bars should be shifted into a better location until an acceptable location is found.

[0105] In addition to avoiding coronary vessels and internal anatomical structures, imaging can be used to determine if the proposed location of the splint will produce the desired shape change of the chamber. This could be accomplished with device **20** by pushing knurled bars **22** into the left ventricle and observing the change in chamber geometry by imaging.

[0106] **FIG. 5** is a view of a human hand X including a thumb Y and a forefinger Z. An alternate locating device **30** is shown attached to thumb Y and forefinger Z by rings **32**. Device **30** also includes a echo visible pad **34**. Pads **34** can be used in the same way as knurled bars **22**, but rather than being held together by a string **24**, pads **34** can be held in place by the user. **FIG. 6** is a view of the surface of pad **34** which would be in contact with heart A during use. Pad **34** preferably includes an echogenic marker **36** enclosed within a material which has a similar density to the heart wall. The similar density material will reduce echo scatter/reflection versus transmission at the surface and provide easier visualization of echo marker **36**. **FIG. 7** is a side view of pad **34** of **FIG. 6**.

[0107] **FIG. 8** is a side view of a locating device **40**. Device **40** can include a syringe **44** having a hypodermic needle **42** in which end **47** preferably does not include an exit lumen or orifice. The lumen does, however, extend through the remainder of hypodermic needle **42**. A balloon envelope is connected to a portion of hypodermic needle **42** proximate its end **47**. An orifice provides fluid communication between the lumen through hypodermic needle **42** and inside balloon **46**. Balloon **46** can be inflated with a echo visible or fluoroscopic visible medium.

[0108] **FIG. 9** is a view of locating device **40** in which balloon **46** is shown inflated within left ventricle B of heart A. By using locator **40** tension member entry/exit points can be evaluated in closer proximity to internal structures than when a locator is placed on the external surface of the heart.

[0109] **FIG. 10** is a vertical cross sectional view of heart A including left ventricle B, right ventricle C and an apex D. A locator device **50** is shown disposed on heart A. Locator device **50** includes apical insert branch **52** which preferably includes an elongate shaft having an inflation lumen and a tension member delivery lumen extending therethrough. The shaft preferably bends transversely near its distal end **54**. A balloon **55** similar to the balloon of locator device **40** of **FIGS. 8 and 9** is connected to the distal end of branch **52**. Balloon **55** can be inflated with a medium visible by echo

imagery or fluoroscopy to locate a tension member entry or exit point on the internal surface of the ventricle wall in a manner similar to locating device **40** of **FIGS. 8 and 9**. An optical fiber could be extended through branch **52** and used as described with respect to the device of **FIG. 29**.

[**0110**] Locator device **50** preferably includes an external branch arm **56** connected to branch **52** at connector **59**. Branch **56** is bent such that its distal end **57** is disposed adjacent distal end **54** of branch arm **52**. An additional marker **58** is preferably connected to distal end **57** of branch arm **56**. Marker **58** is preferably made of material visible either through echo imaging or fluoroscopy. Branch arm **56** is preferably connected to branch arm **52** such that as branch arm **52** is rotated, marker **55** and marker **58** will maintain their relative position to each other, even as their position changes with respect to left ventricle B.

[**0111**] **FIG. 11** is a perspective view of a scissor-like clamp **60** which has a handle **61** and two clamps ends **62** which are made of a material which is echogenic or by fluoroscopy. Clamp **60** can be opened or closed freely as a pair of scissors or have a locking mechanism to releasably fix the spacing between ends **62**. **FIG. 12** is a vertical view of a heart A similar to that view of heart A in **FIG. 4**. Here rather than placing bars **22** on the heart, ends **62** of clamp **60** are placed on the heart. Ends **62** can be used in a manner similar to bars **22** as described above to locate a desirable positioning of a splint on left ventricle B.

[**0112**] After the tension member entrance/exit points or anchor points on the heart have been identified for the transventricular splint, the locations can be marked in various ways to assist a surgeon in accurate placement of a splint when the locator has been removed. Tissue marking pens can be used to mark the location for splint placement. Additionally, sutures can also be placed to provide a marker. For example, a purse string suture with or without pledgets could be used to enhance sealing of the tissue around the tension member to reduce bleeding as the tension member is advanced through the heart wall.

[**0113**] After marking tension member entry/exit points or anchoring points, an open chest alignment device, such as alignment device **70** of **FIG. 13**, can be placed on the heart to aid in the insertion of the tension member through the chamber from outside of the heart. Alignment device **70** includes a handle **71** including holes **72** for the thumb and index finger of an operator. Alignment device **70** includes two alignment arms having distal pad ends **75**. Ends **75** include apertures **76** for receiving a tension member guide and/or tension member therethrough. Pads **75**, arm **74** and handles **71** are preferably aligned on shaft **77** such that as handle **71** are drawn toward each other by an operator. Arms **74** and pads **75** will remain generally parallel to each other. A spring **78** biases handles **71** apart, and arms **74** and pads **75** together. A locking mechanism can be provided to fix pads **75** in position when a desired spacing has been achieved. Apertures **76** preferably remain axially aligned throughout the operational spacing of pads **75**.

[**0114**] In use, pads **75** are disposed on the heart such that apertures **76** are placed over the location or markings previously determined for the exit/entry points. Handles **71** are pulled apart until pads **75** are in engagement with the exterior surface of the heart. Alignment device **70** is now in position for the next step of the splint placement procedure.

[**0115**] **FIG. 14** is an alternate embodiment of an alignment device **80**. Alignment device **80** includes handles **81** and an arm **84** and **86** which are pivotable about a pin **89**. Disposed at the end of arm **82** is an alignment pad **83**. An alignment pad **85** is rotatably connected by pin **86** to arm **84**. A third arm **87** is pivotally connected to arm **82** by pin **90** and pivotally connected to pad **85** by a pin **88**. Pads **83** and **85** each have an aperture **91** therethrough. Pads **83** and **85** have heart engaging surfaces **92** which are preferably parallel to each other within an operational spacing of pads **83** and **85**. Apertures **91** are preferably axially aligned within that operational spacing of pads **83** and **85**.

[**0116**] The spacing of pads **83** and **85** can be manipulated by moving handles **81** toward each other to increase the spacing of pads **83** and **85** or away from each other to decrease the spacing. Pads **83** and **85** preferably engage the heart such that apertures **91** are axially aligned and disposed on the desired entry/exit point for the tension member. The closer handles **81** are moved together, the further pads **83** and **85** move apart.

[**0117**] **FIG. 15** is yet an another alternate embodiment of an alignment device **100**. Alignment device **100** includes handles **101** and elongate arms **102** pivotable about pin **104**. At the end of elongate arms **102**, opposite handles **101**, are alignment pads **103** having orifices **106** extending therethrough. A flexible band **105** extends between pads **103**.

[**0118**] As described above with respect to the alignment devices of **FIGS. 13 and 14**, the opposite pad orifices should be in axial alignment when placed on the heart. In the case of device **100**, this can be accomplished by pivotally mounting pads **103** on arms **102** about a pin **107**. **FIG. 15A** is a detail of a pad **103** pivotally mounted about pin **107** to arm **102**. The arrow in **FIG. 15A** shows the direction that pad **13** can pivot about point **107**. It can be appreciated that if opposite pads **103** are mounted as shown in **FIG. 15A** and if band **105** is sufficiently rigid, band **105** can hold orifices **106** of opposite pads **103** in axial alignment while arms **102** are pivoted about pin **104**.

[**0119**] Since during the typical implant procedure the heart is still beating, it is preferable to equip the pads of the alignment devices **70, 80** and **100** with stabilizing apparatus. The apparatus of **FIGS. 16-20** could be incorporated into the pads of alignment devices **70, 80** and **100**.

[**0120**] **FIG. 16** is a cross sectional view of a pad **111** disposed at an end of an alignment device arm **110**. The pad is shown in engagement with the external wall of left ventricle B. Pad **111** includes an aperture **114** extending therethrough for receiving a tension member guide (described in more detail below) and/or tension member. An annular trough **112** is disposed around aperture **114**. Annular trough **112** is connected to a vacuum source line **113** such that a vacuum source can be fluidly connected to trough **112**. When the vacuum source is applied to trough **112** as shown in **FIG. 16**, a suction force will be created in trough **112** drawing pad **111** and the wall of the left ventricle B together.

[**0121**] **FIG. 17** is a side view of an alignment device pad **121** disposed at the end of an arm **120** including an alternate stabilization device **122**. An aperture **123** for receiving a tension member guide and/or tension member extends through pad **121**. Stabilization apparatus **122** is preferably a roughened surface disposed on pad **121** to increase the

friction between pad **121** and the external wall surface of left ventricle B. Apparatus **122** could be made from, for example, either the hook or the loop portion of a hook and loop type fastener.

[**0122**] If a tension member guide or tension member is inserted into the heart using alignment device **70**, **80** or **100**, it is preferable that the pad of the aperture through the pad at the tension member exit point is over sized in comparison to the pad aperture of the alignment device at the tension member entry point. This is because as the tension member guide or tension member passes through the heart, motion of the heart may cause some minor misalignment of the tension member guide or tension member where it exits the heart.

[**0123**] **FIG. 18** is a perspective view of a pad **131** disposed on the end of an alignment device arm **130**. Pad **131** includes an aperture **132** therethrough. This aperture has a diameter preferably between 1.5 and 15 times greater than the aperture to the opposite pad. **FIG. 18** also shows a notch **133** through pad **131** which extends from the exterior of the pad into aperture **132**. Notch or opening **133** would preferably allow a tension member guide or tension member to be removed transversely from aperture **132** without aperture **132** having to moved over an end of the tension member guide or tension member.

[**0124**] **FIG. 19** is a perspective view of an alternate embodiment of an alignment device pad **141**. Alternate embodiment **141** is disposed at the end of an alignment device arm **140**. Pad **141** includes a funnel shape aperture **142**. Aperture **142** includes a large diameter end **144** and a small diameter end **143**. Large diameter end **144** is preferably disposed adjacent the heart and tension member exit point during use. A guide tube **145** can lead out from smaller diameter end **143** of aperture **142**. Guide tube **145** preferably includes a bend passing through an arc of preferably between about 45° to about 135° and more preferably about 90°. The radius of the bend is preferably long enough that devices advanced through guide tube **145** are not permanently bent as a consequence of being advanced through the arc of guide tube **145**. The radius of the arc is preferably about 0.05 inches to about 2 inches, and more preferably between about 0.75 inches and, most preferably about 1 inch as measured to the central axis of guide tube **145**.

[**0125**] **FIG. 20** is a perspective view of yet another alternate pad embodiment **151**. Pad **151** has a similar shape to that of **FIG. 18** and is disposed at the end of an alignment device arm **156**. Pad **151** has an aperture **152** therethrough and a side notch **153** for transverse removal of a tension member guide and/or tension member. Extending from arm **156** is a stop arm **155** having a tension member guide stop **154** aligned with aperture **156** and spaced from pad **151**. In use, stop **154** is disposed on the opposite side of pad **151** from the heart. As a tension member guide **157** is advanced from the heart through aperture **152**, advancement of the tip of guide **157** is limited by needle stop **154**. Stop **154** thus can limit additional advancement of guide **157** which might injure tissue adjacent to the heart.

[**0126**] **FIG. 21** is a perspective view of an alignment device guide tube **165**. Alignment device guide tube **165** preferably includes a luer lock or similar coupling **166** releasably connectable to a corresponding coupling **161** connected to an alignment device such as **70**, **80** or **100** shown above. Coupling **161** of **FIG. 21** is shown connected to an alignment branch arm **160**. The end of the alignment branch arm **160** opposite coupling **161** preferably includes a heart engaging pad or surface such as those shown in **FIGS. 16 and 17**. An aperture **169** extends through coupling **161** in the end of arm **160**. A transverse aperture or notch extends into aperture **169** such that a tension member guide or tension member can be withdrawn from aperture **169** transversely without moving aperture **169** over the end of the tension member guide or tension member. Guide tube **165** preferably includes a funnel shaped guide tube entry port **167** opposite connector **166**. Guide tube **165** preferably includes a bend passing through an arc of preferably between about 45° to about 135° or more preferably about 90°. The radius of the bend is preferably long enough that the devices advanced through guide tube **165** are not permanently bent as a consequence of being advanced through the arc of guide tube **165**. The radius of the arc is preferably about 0.25 inches to about 2 inches, and more preferably between about 0.75 inches to about 1.5 inches and, most preferably about 1 inch as measured to the central axis of guide tube **165**.

[**0127**] In use, aperture **169** is preferably aligned with the desired entry point for the tension member. Guide tube **165** can be coupled to coupling **161** of the alignment device. If it is difficult to gain access to aperture **169** in order to insert the tension member therethrough because coupling **161** is directed transversely or posteriorly within the patient's chest cavity, guide tube **165** can be adjusted to dispose guide tube entry port **167** generally anteriorly for improved access.

[**0128**] Once alignment device **70**, **80** or **100** is in place on the entry/exit points, a tension member guide or the tension member can be advanced through the alignment device transventricularly through the heart. Preferably, a tension member guide is used to advance the tension member transventricularly. It is anticipated, however, that if the tension member were sufficiently rigid that it could be advanced transventricularly without a guide.

[**0129**] **FIG. 22** is a side view of a tension member guide **170** including a guide tube **176** and stylet **171**. Stylet **171** preferably includes a sharpened distal end **172** for advancement into and from the heart. The proximal end of stylet **171** can include a luer lock or similar type connector. A tube **176** defines an elongate lumen therethrough sized to receive stylet **171** or a tension member. Tube **176** preferably includes a luer fitting at its proximal end **175** opposite its distal end **173**.

[**0130**] In use, stylet **171** is advanced through tube **176** as shown by the arrow in **FIG. 22**. Distal tip **172** of stylet **171** preferably extends distally beyond distal end **173** of tube **176**. Stylet **171** and tube **176** can be coupled by fittings **174** and **175**. Then with one of the alignment devices **70**, **80** or **100** in place, the tension member guide **170**, including tube **176** and stylet **171** is advanced either directly through one of the alignment device apertures or by way of a guide tube such as guide tube **165** of **FIG. 21**. Tension member guide **170** is then advanced through the opposite aperture of the alignment device such as shown in, for example, **FIG. 20**. The length of tube **176** should be long enough to extend through the heart such that proximal end **175** and distal end **173** are disposed outside of the heart. If the alignment device includes transverse notches or slots such as notch **133** of **FIG. 18**, the alignment device can be removed transversely

from needle **170**. Stylet **171** is preferably removed from tube **176**. The lumen through tube **176** is now unobstructed, providing a passageway for advancing a tension member therethrough.

[**0131**] The primary function of guide **170** and, in particular, tube **176**, is to provide a passageway across the heart. Guide **170** should be flexible and resilient such that guide **170** could be advanced through the bend of, for example, guide tube **165**. Yet, to maintain accurate delivery of guide **170**, it preferably does not permanently bend when passing through tube **165**. Column/buckling strength of tension member guide **170** is preferably sufficiently high such that the needle is not deflected as it engages the heart wall as guide **170** is advanced from the heart.

[**0132**] Tube **176** is preferably made from Nitinol, polyimide, reinforced polyimide or other sufficiently flexible biocompatible material. Tube **176** preferably has an inside diameter of about 0.01 inch to about 0.05 inch and, more preferably between about 0.02 inches to about 0.03 inches. The outside diameter of tube **176** is preferably between about 0.015 inches to about 0.07 inches and more preferably between about 0.02 inches and about 0.05 inches. Stylet **171** is preferably formed from Nitinol, stainless steel or other sufficiently rigid biocompatible material. Stylet **171** preferably has a diameter of between about 0.005 inches and about 0.05 inches and more preferably about 0.26 inches.

[**0133**] **FIG. 23** is an alternate embodiment of a tension member guide **180** including a stylet **181** having a handle **184** disposed at its proximal end and a sharpened point **182** disposed at its distal end. Stylet **181** is shown extending through a tube **186** having a proximal end **185** and a distal end **183**. Guide **180** is essentially similar to guide **170** of **FIG. 22** except that tube **186** and stylet **181** do not include a coupling mechanism.

[**0134**] **FIG. 24** shows a distal end of a stylet **190** similar to stylet **171** of **FIG. 22**. The sharpened tip **191** is shown rounded in comparison to the sharp tip **172** of stylet **171** shown in **FIG. 22**. Tip **191** is rounded such that it can be advanced through the heart wall without undue pressure or trauma yet be deflected from, i.e., not pierce, chordae within the left ventricle which may be encountered as the guide is being advanced transventricularly. It should be understood that such a tip could be used on stylets of guides **170** or **180** above.

[**0135**] As an alternative to providing a rounded tip for stylets such as tip **191** of stylet **90**, a retractable sheath **203** can be placed around a stylet **200** having a sharpened tip **202**. In **FIG. 25**, sheath **203** is shown in a first position retracted away from sharpened tip **202**, such that tip **202** is exposed. In **FIG. 26**, sheath **203** is shown in a second position covering sharpened tip **202**. Sheath **203** and stylet **202** are preferably advanced transventricularly in a tube similar to tubes **176** or **186** of tension member guides **170** and **180**. Sheath **203** is preferably spring biased into the second position shown in **FIG. 26** and moved into the first position as shown in **FIG. 25** only as it is advanced through the heart wall. To bias sheath **203** into the second position, a helical coil spring could be placed around stylet **200** between a proximal end of sheath **203** and the stylet handle.

[**0136**] **FIG. 27** is a view of yet another alternate embodiment **210** of a stylet for a tension member guide. Stylet **210** includes a sharpened tip **211** at the distal end of a shaft **214** which defines an inflation lumen therethrough. Tip **211** is sealed such that inflation fluid forced through stylet **214** will exit an orifice **213** disposed within a balloon **212** connected to stylet **210** proximate its distal end.

[**0137**] **FIG. 28** is a view of stylet **210** of **FIG. 27** wherein balloon **212** has been inflated to cover sharpened tip **211**. In use, balloon **212** would be inflated after stylet **214** has been advanced into the left ventricle and deflated prior to being advanced from the heart and ventricle through the heart wall. Stylet **214** preferably is used in conjunction with a guide tube in a manner similar to stylets **171** and **181**.

[**0138**] **FIG. 29** is yet another alternate embodiment **215** of a tension member guide **215** in accordance with the present invention. Guide **215** is shown including an elongate tube **220** having a distal tip **222** partially advanced through left ventricle B of heart A. **FIG. 30** is a view of distal tip **222** of guide **215**. By reference to **FIG. 30**, it can be seen that shaft **222** defines a lumen therethrough in which an optical fiber **224** is disposed.

[**0139**] To guide **215** transventricularly, rather than advancing guide **215** through an alignment device, such as devices **70**, **80** or **100**, guide **215** is advanced through a first left ventricular wall where a tension member entry point has previously been identified. Light is transmitted axially through the lumen within shaft **220** by optical fiber **224**. The light axially exits distal end **222**. If the light is sufficiently bright, it should be visible from outside of the heart when guide **215** is being advanced through the left ventricle. If the visible light is directed at a predetermined exit point, marked on the outside of the heart, needle **215** can be advanced through the exit point to outside the heart. Fiber optic **214** can then be removed from the lumen through shaft **212**. The lumen can then be used as the passageway for advancement of a tension member therethrough.

[**0140**] **FIG. 31** is an alternate embodiment of a tension member guide **230** including an optical fiber **232** disposed around a shaft **231**. Shaft **231** is essentially similar shaft **220**. Guide **230** can be advanced transventricularly in a manner similar to that described with respect to guide **215** except that optical fiber **232** need not be removed and shaft **231** which defines an elongate lumen extending therethrough.

[**0141**] **FIG. 32** is yet another embodiment of a tension member guide **235** having a shaft **236** essentially similar to shaft **220**. An optical fiber **237** is disposed parallel to shaft **236** and connected thereto. In addition to the fiber optic guides of **FIGS. 29-32**, real time guidance of the tension member guide transventricularly can be accomplished by echo imagery or fluoroscopy. The guide in such instances should be echogenic or substantially radiopaque.

[**0142**] The fiber optic guides of **FIGS. 29-30** lend themselves particularly well to both open chest and less invasive procedures. When the fiber optic guides are configured for less invasive procedures, the shaft is preferably advanced through the heart through a lateral port and advanced out the opposite side of the heart and body through an oppositely disposed lateral port. Opposite ends of the shaft then preferably extend outside of the body-through the oppositely disposed lateral ports.

[**0143**] **FIG. 33** is a perspective view of a scissor-like guide clamp **240** which can be used to guide a tension

member **249** into the tube **248** of a tension member guide. Device **240** includes scissor-like handles **241**. Handles **241** extend to respective arms **242**. Each handle **241** and arms **242** form a unit which are pivotable about a pin **243**. At an end of arms **242** opposite handles **241**, a half conical recess is formed in arm **242**. Recess **247** leads to a generally semi-circular cross sectional channel **246** which in turn leads distally to a generally semi-circular cross sectional tube receiving groove at distal end **244** of arm **242**.

[**0144**] When arms **242** are brought together as shown in **FIG. 34**, receiving grooves **245** form a receiving aperture to receive an end of tension member guide **248**. Recesses **247** form a tension member receiving opening leading to a tube formed by channels **246**. A tension member **249** is shown being advanced through tube **248** in the direction of the arrows. Tension member **249** could also be advanced from tube **248** through device **240**. Channel **246** preferably includes a bend passing through an arc of between about 45° and 135° and more preferably through about 90°.

[**0145**] Once a tension member guide has been delivery transventricularly, and a passageway is created across the chamber, the tension member is delivered through the passageway. When delivering the tension member, the end of the tension member not being advanced through the passageway preferably has an anchor or anchor pad fixably connected thereto. This eliminates the need to attach the pad later, but it may not be possible in the case where the guide includes a hub such as hub **175** of tube **176** of **FIG. 22**. In the case of guide **180** where tube **186** does not include a hub, tube **186** can be withdrawn from the heart over the end of the tension member which was advanced transventricularly. In order to remove a tube **176** from a tension member which has been advanced therethrough and has an anchor pad fixably connected to the end of the tension member which was not advanced through tube **176**, the tension member should be advanced through tube **176** beginning at distal end **173** such that the end of the tension member not having the anchor pad emerges from the heart at hub **175**. Then tube **176** can be removed over the end of the tension member to which a pad has not yet been attached.

[**0146**] Rather than using a tension member guide and/or tension alignment device to align the tension member for delivery through the preselected exit and entry points, tubular members **250** such as those shown in **FIG. 35** can be advanced into the left ventricle from oppositely disposed predetermined entry points on the heart wall to form a splint **253'**. Members **250** preferably have ends **250'** which are sufficiently sharp that members **250** can advanced through the heart wall without excessively injuring the wall. Members **250** preferably have anchor pads **252'** fixed at their opposite ends **250'**. Members **250** preferably have a lumen define therethrough in fluid communication with a lumen defined through pads **252'**.

[**0147**] After members **250** are advanced into the ventricle through the predetermined entrance points, a wire hook **253** is advanced from one tension **250** and a wire loop **251** is advanced from the opposite member **250**. Hook **253** is then guided into loop **251** either by feel, or by echo imagery or fluoroscopy. Loop **251** preferably has a hook guide **252** to channel hook **253** into the member **250** disposed to the left in **FIG. 35**, as loop **251** is drawn through that member **250** by pulling ends **251'** of loop **251** to the left. Loop **253** is preferably drawn through member **250** disposed to the left in drawing **FIG. 35** such that it can be knotted to the left of pad **252'** to form a tension member. The knot will restrain hook **253** from being pulled back in the heart. The opposite ends **253'** of hook **253** can be knotted to the right of the pad **252'** disposed to the right in **FIG. 35**. The knot should be sufficiently large to prevent ends **253'** from being pulled into ventricle B.

[**0148**] It can be appreciated that members **250** can be placed as shown without pads **252'**. Loop **256** can be placed across left ventricle B to form a tension member as described above. Members **250** can then be withdrawn and pads placed on opposite ends of hook or tension member **253**. Alternately, hook **253**, once placed across left ventricle B, could be used as a tension member lead by fastening a tension member to one end of hook **253** and drawing the attached tension member across left ventricle B by withdrawing hook **253** from the left ventricle B.

[**0149**] **FIG. 36** is an alternate embodiment of a splint **260'**. A tension member **255** is advanced into left ventricle B. An anchor pad **255'** is shown connected to one end of tension member **255** outside of chamber B. Tension member **255** includes a sharpened end **256** which is advanced through the myocardium. Proximate sharpened tip **256** are a plurality of circumferential grooves **256**. To the left in **FIG. 36** is a tension member **258'** extending into chamber B. Connected to one end of tension member **258'** is a anchor pad **257'**. Tension member **258'** includes an outer tube **257** and inner receiving tube **258**. A loop **259** extends to a side of receiving tube **258** and out of the ventricle through a lumen defined between tube **257** and **258**. Ends **259'** of loop **259** are shown to the left of pad **257'**. An end **261** of tube **258** is preferably thin or sharp enough to be advanced through heart wall of chamber B.

[**0150**] Tension members **255** and **258'** are advanced into chamber B similarly to tension members **250** of splint **253'**. Once tension members **258'** and **255** have been advanced into chamber B, end **256'** of tension member **255** is advanced into loop **259**. This can be accomplished by feel, or echo imaging or fluoroscopy if loop **259** and tension member **255** are echogenic or radiopaque respectively. After tension member **255** is advanced into loop **259**, loop **259** is drawn to the left by pulling ends **259'** to the left. Tension member loop guide **260** engages with a groove **265** and tension member **255** and end **256'** are drawn into receiving tube **258** to unite tension members **258'** and **255**. Ends **259'** are then tied to prevent loop **259** from shifting to the right in **FIG. 37**.

[**0151**] It can be appreciated that members **255** and **258'** can be advanced into left ventricle B while not having pads **255'** and **257'** attached thereto respectively. Once members **255** and **258'** are placed across left ventricle B and connected as shown in **FIG. 37** they can be used as a tension member guide tube such as guide tube **176** of **FIG. 22**.

[**0152**] **FIG. 38** is a vertical cross sectional view of left ventricle B of heart A including apex D showing an alternate device for placing a tension member. A catheter **265** having an elongate shaft **265'** is disposed in part within ventricle B. Shaft **265'** has a distal end **266** and a transverse bend proximate end **266**. Shaft **265'** has a proximal end **267**. An elongate lumen is defined through shaft **265'** between proximal end **267** and distal end **266**. Shaft **265'** is sufficiently rigid that distal end **266** can be advanced through apex D. A

purse string suture is preferably placed on apex D around shaft **265'** to control bleeding. Catheter **265** is advanced into ventricle B such that distal tip **266** is brought into contact with the ventricular wall at a location where the tension member will exit chamber B. Catheter **265** preferably include a retractable brace wire **268'** having a distal end fixably connected to shaft **265** proximate the transverse bend. Brace wire **268'** extends proximally outside of shaft **265'** to an orifice where it enters shaft **265**. Wire **268'** then extends within shaft **265'** proximal to the proximal end of shaft **265'**. When advancing catheter **265** into ventricle B, wire **268'** can be pulled proximally drawing wire **268'** parallel and adjacent to shaft **265'**. Once catheter **265** is disposed within ventricle B, wire **268'** can be shifted distally to bow transversely and brace catheter **265** against a ventricular wall opposite distal end **266**.

[**0153**] Distal tip **266** preferably includes a radiopaque marker such as that shown in **FIG. 10**, so that tip **266** can be viewed by fluoroscopy or an echo marker for echo visualization. The radiopaque or echo marker can be used to locate the tension member exit points. Once a tension member exit point is determined, a tension member **268** can be advanced through the lumen of catheter **265**. The tension member should be sufficiently rigid and have a distal end sufficiently narrow or sharpened that it can be advanced through the ventricular wall. After tension member **268** is passed through the ventricular wall, catheter **265** is removed from ventricle B and wire **268**. Catheter **265** is then reinserted into left ventricle B through apex D along side tension member **268**.

[**0154**] The location of a second tension member exit point is determined, this time rather than advancing a tension member through the lumen of catheter **265**, a hypotube **269** having a distal tip **270** and shown in **FIG. 39**, is advanced through catheter **265**. Distal tip **270** passes through the heart wall at the location of the second tension member exit point. Tube **269** need not be a hypotube but could be another tube having sufficient pushability to be advanced through the heart wall at the second tension member exit point. Distal tip **270** should be narrow enough or sufficiently sharpened to traverse the heart wall. A proximal end of hypotube **268** should remain outside the heart and proximal apex D. In **FIG. 39**, catheter **265** has been removed proximally from hypotube **269** as it was from tension member **268**. After hypotube **269** has been placed as shown in **FIG. 39**, the proximal end of tension member **268** is advanced into proximal end **271** of hypotube **269**. The proximal end of tension member **268** is advanced through hypotube **269** until it exits chamber B by way of the distal end **270** of hypotube **269**.

[**0155**] In **FIG. 40**, tension member **268** is shown extending from distal end **270** of hypotube **269**. Hypotube **269** is shown being withdrawn in the direction of the arrow over tension member **268**. After hypotube **269** is withdrawn, the tension member **268** is then in place across ventricle B It can appreciated that tension member **268** has been placed without an alignment device such as alignment devices **70**, **80** or **100**. Anchors or anchor pads can be placed on the tension member on opposite sides of the heart and adjusted as described in more detail below. The remainder of the steps necessary to complete the placement of the transventricular splint will be discussed in detail below.

[**0156**] **FIG. 41** is a vertical cross section of left ventricle B of heart A including apex D showing an alternate method of placing a tension member. Two guide members **270** and **271** are shown advanced through apex D and out opposite sides of chamber B. Guide members **270** and **271** have been placed in this position in a manner similar to the way that tension member **268** was placed as shown in **FIG. 39**.

[**0157**] **FIG. 42** is a view of a tension member **272** including guide tubes **273** disposed at each of its ends. Guide tubes **273** have distal ends **274** which must be sufficiently narrow or sharpened to penetrate the ventricular walls. Guide tubes **273** as shown, have been advanced through apex D over guide members **270** and **271**. Tension member **272** must be sufficiently rigid to provide sufficient pushability to advance guide tubes **273** through apex D over guidewires **270** and **271** and through the ventricular walls. Once guide tubes **273** have been advanced through oppositely disposed ventricular walls, tension member **272** can be pulled taunt across ventricle B. Once tension member **272** is drawn across ventricle B, anchors can be disposed on tension member **272** on opposite sides of heart A as described in more detail below.

[**0158**] **FIG. 43** is a vertical cross section of left ventricle B of heart A including apex D. As shown in **FIG. 43**, leads **275** and **276** have been advanced through apex D and opposite ventricular walls in a manner similar to guidewires **270** and **271** as shown in **FIG. 41**. Connected to leads **275** and **276** by connectors **278** is a tension member **277**. This arrangement may be used in a situation wherein tension member **277** is substantially less pushable or rigid than leads **275** and **276**. Leads **275** and **276** must first be placed in a manner similar to guide members **270** and **271** of **FIG. 41**, such that the ends of leads **275** and **276** extend through the side walls of ventricle B and apex D. Then the relatively flexible tension member can be drawn into ventricle B. As shown in **FIG. 43**, tension member **277** is partially drawn into ventricle B. Ultimately leads **275** and **276** are drawn in opposite directions until tension member **277** extends transventricularly across ventricle B and passes through the ventricular wall to the exterior of heart A. Once tension member **277** is disposed on opposite sides of the heart, anchors or pads can be attached to opposite ends of the tension member to form the transventricular splint. The splint can be adjusted as described in more detail below.

[**0159**] **FIG. 44** is a view of connector **278** of **FIG. 43**. Lead **275** includes a loop **280** disposed at one end. Tension member **277** includes a hook **279** disposed at one end. A locking tube **281** is slidably disposed over a portion of hook **279**. To complete the connection between lead **275** and tension member **277**, hook **279** is hooked to loop **280**. Hook **279** is then collapsed such that hook lock **281** can be slid over the collapsed portion of hook **279** to retain loop **280** in place on hook **279** as shown in **FIG. 45**.

[**0160**] The tools and methods shown and described with respect to **FIGS. 38-43** lend themselves both to open chest and less invasive implantation procedures. They are particularly suited to less invasive procedures where the apex of the heart is accessed through an anterior port and the ventricular walls are accessed through oppositely disposed lateral ports such that opposite ends of the tension member can extend into oppositely disposed lateral ports. Rather than gaining access through the apex, those tools shown in **FIG. 38-43**

gaining access the left ventricle through the apex could instead access to the left ventricle through the aortic valve or mitral valve. Access through the aortic valve is preferably obtained through the aorta by way of either a carotid or femoral artery access point. Access to the mitral valve can be obtained by way of a port, window or the like and may be a particularly desirable route if mitral valve replacement or repair is done in conjunction with splint implantation.

[0161] With respect to those tension members placed ventricularly through tension member guides as described above, it was indicated that it is preferable to connect an anchor or anchor pad to the end of the tension member not being advanced through the guide tube prior to advancing the tension member through the guide tube. It is not necessary to connect the pad to the tension member at that time, however. In the case of those embodiments where the tension member is advanced into the ventricle from opposite sides as shown in **FIGS. 35-37**, it is preferable that the anchors or anchor pads are connected to the tension members prior to advancement of the tension members into the ventricle. Here again, having the anchors connected to the tension members at this time is not required, however. With respect to those methods and tools shown in **FIGS. 38-43**, the pads are preferably placed on opposite ends of the tension member after the tension member is disposed transventricularly and both ends of the tension member are exposed outside of the heart.

[0162] Once the pads or anchors are disposed on the tension member, the length of the tension member disposed between the pads is preferably adjusted. This adjustment is preferably made by fixing the position of one of the pads on the tension member and allowing the other pad to slide along the tension member. With respect to the splints of **FIGS. 35-37**, however, both pads can be affixed to the respective tension members prior to adjusting the overall length of the splint (by placement of the knots as described above). The pad which is fixed to the tension member is drawn into engagement with the external wall of the heart by pulling on the end of the tension member opposite the fixed pad. Then the other pad is brought into engagement with the external wall of the heart by sliding it along the tension member toward the pad which is fixed on the tension member. The pads can be placed on opposite ends of the tension member by way of left lateral and right lateral ports to perform the transventricular splint implant less invasively.

[0163] The effective length of the tension member, i.e., the distance between the pads measured along the tension member, can be correlated with the magnitude of heart wall stress reduction. For an idealized calculation of this relationship, please see U.S. patent application Ser. No. 08/933,456, filed Sep. 18, 1997, and incorporated herein by reference. It is also anticipated that the force exerted axially along the tension member by the heart engaging the pads can also be correlated with heart wall stress reduction.

[0164] **FIG. 46** is a view of a measuring device **300** through which a tension member **302** has been threaded. One end of tension member **302** extends through left ventricle B of heart A. An anchor pad **304** has been fixedly attached to tension member **302** and end **303** and drawn into engagement with heart A. The second pad **306** has been placed on tension member **302** but has not been tightened, i.e., fixedly attached to tension member **302**. Pad **306** is free to slide along tension member **302**. Extending from anchor pad **306** is a tether or string **308**. In general, it may be desirable to attach a tether to the anchor pads as shown herein. This would make them easier to retrieve if they were dropped within the chest cavity during a splint implantation procedure.

[0165] Measuring device **300** includes an elongate tension member receiving tube **310** having a distal end including a pad engagement member **312** and a proximal end **316** connected to a preferably clear measuring tube **314** having a measuring scale **315** marked thereon. Tension member **302** has been threaded through tube **310** and tube **314**. Tension member **302** has also been threaded through a tube **318** having a retaining block **319** and a screw **320** at one end tightened to releasably hold tension member **302**. Screw **320** is preferably connected to a force transducer. Another block **322** disposed at the opposite end of tube **318**. A screw **326** extends into block **322** to releasably hold guidewire **302**. Block **322** is disposed adjacent block **324** connected to tube **314**. Interconnecting block **322** and **324** is a guide rail **330** and adjustment screw **328**. Adjustment screw **328** can be rotated to move screw and block **320**, tube **318**, block **322**, screw **326** and thus, tension member **302** through tube **314**.

[0166] Tension member **302** preferably has a visible index mark **332** placed along its length a known distance from end **303** of tension member **302**. Measuring tube **314** preferably magnifies mark **332**. The length of tube **310** and pad engaging member **312** as well as tube **314** should also be known and correlated to scales **315** such that by determining the location of mark **332** relative to scale **315**, the length of tension member disposed between pads **304** and **306** can be determined. Set screw **328** can be adjusted until the desired length of tension member **302** between pads **304** and **306** is achieved. Then pad **306** can be fixed in place along tension member **302**. Tether **308** is preferably removed. It can be appreciated that tube **310** can be sufficiently long to be advanced through a port for adjusting the length of tension member **302** less invasively.

[0167] The distance between pads **304** and **306** is preferably related to the radius R_1 of the unsplinted left ventricle. For purposes of this explanation, 2 R_1 can be viewed as the length of the tension member between pads **34** and **36** at end diastole where the pads are spaced such that no shape change is induced by the splint. When pads **306** and **304** are fixed along tension member **302** the distance along the tension member between the pads can be considered l. It can be appreciated that if l were greater than 2 R_1 no shape change to the left ventricle would be induced throughout the cardiac cycle. At the opposite extreme, l could be so short that the opposite walls of the left ventricle are held or pressed together between pads **304** and **306** throughout the cardiac cycle. Preferably, however, the ratio l/2 R_1 is preferably between about 0.4 to about 0.8 and more preferably between about 0.5 to about 0.7 and most preferably about 0.6.

[0168] In addition to measuring the length of tension member **302** between pads **304** and **306** to determine their desired spacing, it is anticipated that device **300** can be used to measure axial force on the tension member as pad **306** is engaged against heart A and advanced toward **304** along tension member **302**. To accomplish this, in the preferred embodiment, the device **300** also includes a force transducer **334** and pin vice **336**. Pin vice **336** can be tightened to

fixably hold tension member **302**. If screws **320** and **326** are loosened such that only pin vice **336** retains tension member **302** from sliding distally within the device **300**, the distally directed force in tension **302** will be transferred by pin vice **336** to force transducer **334**. The axial force detected by the transducer can be observed by calibrating the transducer or connecting it to a monitor in a manner known to those skilled in the art of force transducers. Set screw **328** can be adjusted until the desired force is obtained. The surface of the pad itself could also be centered to create pores for tissue ingrowth. When the desired force level is achieved, pad **306** could be fixed in-place along tension member **302**.

[**0169**] With respect to any of the transventricular splints disclosed herein, the length of the tension member can be adjusted to form a full cycle splint or restrictive splint. If the length of the tension member is such that the anchors or anchor pads engage the heart to create a shape change throughout the cardiac cycle, the splint created is a fill cycle splint. If the anchor or anchor pads do not engage at end systole to create a shape change, the splint formed is a restrictive splint.

[**0170**] **FIG. 47** is a cross sectional view of an embodiment of anchor pad **340** in accordance with the present invention. Anchor pad **340** preferably includes a disc shaped pad portion **342**. Disc shape pad portion **342** includes side **343**, which in use is disposed toward the heart. A conical aperture **348** having sloping sides **346** extends through pad **342**. Collet **344** is disposed within orifice **348**. A threaded portion **350** of collet **344** extends from orifice **348** opposite side **343**, nut **352** is threaded over threaded portion **350**. Lumen **345** extends through collet **344**. A tension member **354** is shown extending through lumen **345**. Lumen **345** has a diameter such that when nut **352** is not tightened on threaded portion **350**, tension member **354** can slide freely through lumen **345**. When nut **352** is tightened, it draws collet **344** away from side **343**. Collet **344** is then pinched between walls **346** of orifice **348**. When collet **344** is pinched, the size of lumen **345** is reduced such that tension member **354** can no longer move freely within lumen **345**, fixing the position of pad **340** on tension member **354**.

[**0171**] **FIG. 48** is a cross sectional view of an alternate embodiment an anchor pad **360** in accordance with the present invention. Anchor pad **360** includes a generally disc-shaped pad portion **362**. Pad **362** includes a side **363** which when the pad is in use, is disposed toward the heart. A tension member lumen **364** extends through pad **362**. Lumen **364** preferably has a generally conical shaped portion **365** disposed toward side **363**. Tension member **370** is shown disposed through lumen **364** in **FIG. 48**. Pad **362** includes a threaded passage **366** extending from an edge of pad **362** to lumen **364**. A set screw **368** is threaded into passage **366**. Set screw **368** can be tightened to engage tension member **370** to fix the position of anchor pad **360**. When set screw **368** is not tightened, the size of lumen **364** is preferably large enough that anchor pad **360** can slide relatively freely over tension member **370**.

[**0172**] **FIG. 49** is a perspective view of yet another embodiment of anchor pad **380** in accordance with the present invention. Anchor pad **380** preferably includes a generally disc-shaped pad portion **382** having a first side **383** which in use would be disposed toward the heart and a second side **385**. Pad **382** as well as pads **342** and **362** are preferably formed from a metal such as stainless steel alloys or titanium alloys.

[**0173**] A tension member fastener **384** is formed in pad **382** by cutting a series of grooves and apertures through pad **382** from side **385** to side **383**. A first groove **386** has a generally horseshoe shape. Second groove **388** extends between opposite portions of horseshoe shaped groove **386** to form two oppositely disposed cantilever members **387**. A relatively large aperture **394** is formed between cantilever members **387** proximate their free ends. A second and smaller aperture **390** is formed closer to the fixed ends of cantilever members **387**. Tension member **392** is shown extending through aperture **390**.

[**0174**] As shown in **FIG. 49**, tension member **392** is clamped between cantilever members **387** such that the location of pad **382** is fixed along tension member **392**. Pad **382** can be released by using a spreading device **396** to spread cantilever members **387** apart. Spreading device **396** includes handle **398** to spreading arms **400** each having a finger **402**. Fingers **402** can be placed within aperture **394** then arms **400** and fingers **402** can be spread apart by pivoting them around a pin **404** such that cantilevers **387** are spread apart and pad **382** can move freely along tension member **392**. It can be appreciated that although spreader **396** is shown extending transversely from tension member **392**, it could also be configured such that fingers **402** do not curve transversely from arms **400** and thus spreader **396** could be disposed parallel to tension member **392**. This would be particularly desirable in a situation where anchor pad **380** was being placed through a port or window during a less invasive splint implantation procedure. It can be appreciated that cantilever members **387** can be held apart such that pad **380** can be moved along tension member **392** by placement of a temporary wedge or pin in groove **388**. For example, grooves **388** may include an additional small aperture disposed between aperture **390** and aperture **394** into which a pin could be placed to hold open members **387**. When it is desired to fix the position of anchor pad **380** on tension member **392**, device **396** could be used to spread cantilever members **387** to remove the pin. The cantilever members could then be released to engage tension member **392**. Aperture **390** of pad **380** can also include a conical portion disposed toward side **383** such as conical portion **365** of pad **360**.

[**0175**] Cantilever arms **384** are preferably configured such that they do not stress tension member **392** beyond its elastic limit. It can also be appreciated that the force developed by cantilever members **387** impinging on tension member **392** is operator independent and defined by the geometry and material characteristics of members **387**.

[**0176**] **FIG. 50** is a perspective view of an anchor pad **360** having a tension member **370** extending therethrough. After pad **360** is secured to tension member **370**, that portion of tension member **370** which extends from the side of anchor pad **360** opposite side **363** is preferably removed. This can be accomplished by trimming tension member **370** with wire cutter **414** or scissors. Although anchor pad **360** is used here to illustrate trimming tension member **370**, it can be appreciated that in each of the embodiments disclosed herein there may be an excess portion of tension member extending from an anchor, which is preferably removed or trimmed.

[0177] **FIG. 51** is a cross sectional view of an alternate embodiment **420** of a tension member cutter. Device **420** includes an elongate outer tube **422** having a distal end **424**. Tube **424** defines a lumen **423** through which extends a second tube **430** having a distal end **428**. Extending distally from distal end **428** are two cutting arms **424** and **426** which are shown partially withdrawn into lumen **423** and transversely restrained by distal end **424** of outer tube **422**. When unrestrained by distal end **424**, arms **424** and **426** are biased apart. Each arm **424** and **426** has a cutting element **425** and **427**, respectively. Elements **425** and **427** are shown in contact with each other in **FIG. 51**. A tension member **370** extends between arms **424** and through lumen **432** of inner tube **430**. A representative anchor pad **360** is disposed adjacent elements **425** and **427**. Device **420** of **FIG. 51** is particularly useful when trimming excess tension member using less invasive techniques as it can be readily advanced over a tension member through a port or window.

[0178] **FIG. 52** is a vertical cross sectional view of left ventricle B of heart A. A transventricular splint **443** including a tension member **370** and anchor pads **360** are shown disposed on heart A. To the left of heart A as shown in the figure is a coiled portion **442** of tension member **470**. As an alternative to trimming an excess length of tension member, tension member **370** could be formed from a shape memory alloy such that portion **442** could be preset to assume a coil shape when warmed to near body temperature.

[0179] Once the length of the tension member has been adjusted, the anchors are secured in place along the tension member and the excess length of tension member removed if desired, the anchor or anchor pads are preferably secured in place on the heart. The anchor or anchor pads are secured such that relatively movement between the anchors or anchor pads and the heart is limited to reduce abrasion of the heart wall. To secure the anchor or anchor pads to heart A, a biocompatible adhesive could be placed between the pad and the heart to adhere the pad to the heart. Alternately, apertures could be provided in the pad such that sutures could be extended through the apertures and into the heart to secure the pad. In addition to sutures, the pad could include threaded apertures into which anchor screws could be advanced through the pad and into the heart wall to secure the pad to the heart.

[0180] **FIG. 53** illustrates yet another alternative approach to securing the anchors or anchor pads to the heart surface. **FIG. 53** is a cross sectional view of an anchor pad **340** disposed on heart A. Anchor pad **340** is disposed within an envelope **446**. Envelope **446** includes a bottom layer **447** disposed between anchor pad **340** and heart A and a top layer **448** disposed on the opposite side of anchor pad **340**. Layers **347** and **340** are held together by sutures **449**. Bottom layer **447** is preferably a mesh dacron or expanded PTFE which has a pore size or intranodial dimension sufficient to promote tissue ingrowth. The pore size is preferably between about 10 and about 100 microns and more preferably, between about 20 and about 40 microns. With respect to expanded PTFE, the intranodial dimension is preferably between about 10 to about 100 microns and more preferably between about 20 to about 40 microns. The top material could also be dacron or expanded PTFE or the like having a pore size which preferably does not promote ingrowth and thus resists adhesion to surrounding tissue.

[0181] Envelope **446** would preferably be placed around pad **340** prior to placing pad **340** on tension member **354**. A window **450** can be provided to provide access to nut **352** to secure pads to tension member **354**. After tightening nut **352**, window **450** can be closed by suture **452**. **FIG. 54** is a top view of pad **340** and envelope **446** of **FIG. 53**. It can be appreciated that a similar envelope can be placed around the various anchor pads disclosed herein. The location of the window may have to vary, however, to provide access to the respective means for securing the anchor pads to the tension member.

[0182] **FIG. 55** shows an alternate embodiment of a splint locating device **460** disposed on heart A. It can be appreciated, however, that alternate locating device such as that shown in **FIGS. 13-15** could also be used. Heart A includes left ventricle B, right ventricle C and apex D. Splint locating device **460** which is particularly useful in performing less invasive procedures. Device **460** can be advanced through an anterior port or window to apex D and onto heart A as shown in **FIG. 55**. Device **460** includes an elongate catheter shaft **462** having a lumen extending therethrough. Extended from the distal end of catheter shaft **462**, are two arms **464** preferably biased to spread apart from each other when advanced distally from catheter shaft **462**. Connected to the distal end of wires **464** is a band **466**. Band **466** preferably readily elongates, i.e., increases in diameter as it is advanced onto heart A, such that band **466** does not substantially alter the pumping performance of heart A.

[0183] **FIG. 56** is a view of the device **460** disposed on heart A. Wires **464** are shown extending from catheter shaft **462** distally to band **466** and proximally from catheter shaft **462**. Prior to advancing catheter **460** through a port or window to apex D, wires **464** are preferably pulled proximally into shaft **462**. Band **466** can also be folded and pulled into shaft **462** or folded and disposed parallel to shaft **462** for advancement through the port or window. Once the distal end of shaft **462** is advanced to apex D of heart A, wires **464** can be shifted distally to deploy band **466** and the adjacent portions of wires **464** in heart A.

[0184] **FIG. 57** is a generally vertical cross sectional view of left ventricle B of heart A including apex D. Catheter **460** is shown deployed on heart A. Band **466** has been advanced sufficiently high on heart A such that the adjacent portions of wires **464** will lie proximate potential entry/exit points for the tension member guide or tension member. As can be seen in **FIG. 57**, two balloon catheters **468** have been advanced over wires **464**. Those skilled in the art will recognize that catheters **468** could be configured similarly to an over-the-wire or rapid exchange angioplasty catheter. Balloon catheters **468** include a distally disposed balloon **469** which would be larger than angioplasty balloons, however.

[0185] **FIG. 58** is a transverse cross sectional view of chamber B and catheter **460** taken from **FIG. 57**. Balloons **469** have been inflated to induce a shape change in chamber B similar to that shown in **FIG. 1A**. Balloons **469** can be inflated with a radiopaque or echogenic inflation fluid such that they can be visualized by fluoroscope or echo imagery. If the balloons are imaged in this way, a portion **469'** of each balloon **469** engages heart A can be considered as a location for the exit/entry points for the tension member. The criteria for evaluating the location is similar to that described above with respect to the locators of **FIGS. 3-12** above. Device **460** can also be used acutely as a temporary splint.

[0186] **FIG. 59** is a vertical cross sectional view of left ventricle B of heart A having an apex D on which another alternate embodiment **470** of a locator device is shown disposed within chamber B. Locator device **470** includes an elongate catheter shaft **472** having a distal end **478**. Extending from distal end **478** is a wire or elastic ribbon **476**. Wire **476** is shown extending transversely from distal end **478** to radiopaque or echogenic markers **479**. Additional wires or leads **474** extend proximally from markers **479** to a ring or hub **475** disposed outside of heart A. To advance catheter **470** into chamber B or withdraw it therefrom, hub **475** is pulled distally along shaft **472** to draw wires **474**, markers **479** and wires **476** generally parallel to and adjacent shaft **472**. In this position, catheter **470** can be advanced through or withdrawn from chamber B by way of a port or window used for less invasive procedures. Catheter **470** and markers **479** can be used to locate the entry/exit points similarly to the locators shown in **FIGS. 4-12** and in particular, the marker **55** of **FIG. 10**.

[0187] **FIG. 60** is a transverse cross section of a human torso through heart A, left ventricle B and right ventricle C, right lung E and left lung F. Locator **60** of **FIG. 11** is shown being advanced less invasively to heart A. **FIG. 61** is a same human torso cross section as shown in **FIG. 60**, except that locator **60** has been brought, into engagement with heart A as shown from a different perspective in **FIG. 12**. **FIG. 62** is yet another view of the same torso cross section where a locator **485** having scissor-like handle **486** and arms **488** are coupled by an elongate linkage **487**. As can be appreciated by those skilled in art, arms **488** can be drawn together or spread apart by an operating handle **486**. The distal end of arms **488** should be echogenic or radiopaque such that they can be viewed by echo imaging or fluoroscopy similarly to end **62** of locator **60**. Locator **485** is shown advanced to heart A through a lateral left approach. Locator **485** is preferably advanced through a port not shown of a type known to those skilled in the art. It can be appreciated that locator **485** can be used to locate a splint at a different location than locator **60**.

[0188] An alternate method of splint placement could advantageously use a thread pusher and snare. **FIG. 63** is a view of a thread pusher **500**. Thread pusher **500** includes a housing **502** defining a lumen **503** therethrough. Extending from lumen **503** is a shaft **504** having a sharpened distal tip **506**. Shaft **504** defines a lumen **507** in fluid communication with lumen **503** of housing **502**. Shown disposed within lumen **503** and advancable into lumen **507** is a plunger **508**. Plunger **508** has a distal end **510**. Plunger **508** defines an elongate lumen **511** extending the length of plunger **508**. Disposed through lumens **503**, **511** and **507** is a thread **512**. Lumen **511** preferably has a diameter just slightly greater than the diameter of thread **512**. Lumen **507**, however, has a diameter great enough to coil a substantial length of thread **512** therein. The necessary length of thread **512** can be appreciated in view of the discussion which follows regarding the use of thread pusher **500**.

[0189] **FIG. 64** is a generally vertical cross sectional view of left ventricle B of heart A having apex D, aortic valve G and mitral valve H. Disposed within chamber B is a catheter **520** having an elongate catheter shaft **522** extending through apex D of heart A to proximate aortic valve G. A wire or line **526** extends through an elongate lumen through shaft **522**, loops to form a snare **524** at the distal end of shaft **522** and returns back through the lumen. As shown in **FIG. 64**, snare **524** is disposed generally around or preferably through the orifice of aortic valve G. Two thread pushers have been advanced from opposite sides of heart A such that distal tips **506** of shafts **504** are disposed within chamber B. Plunger **508** of thread pusher **500** has been advanced to release previously coiled portion **514** of thread **512** into chamber B. As shown by the arrows, blood flow leaving chamber B exits through aortic valve G. As shown in **FIG. 64**, this blood flow has carried threads **512** through snare **524** and aortic valve G.

[0190] **FIG. 65** shows the same cross sectional view of left ventricle B as **FIG. 64**, except that snare **524** has been partially retracted by pulling line **526** proximally. Catheter **520** has also been partially withdrawn in a proximal direction from chamber B. **FIG. 66** is yet another view of the cross section of left ventricle B as shown in FIG. **64**, except that snare **524** has been withdrawn proximally from catheter **522** such that an end of each thread **512** is disposed proximally of shaft **522**.

[0191] **FIG. 67** is yet another view of the cross section of left ventricle B shown in **FIG. 64**, except that threads **512** have been joined and extend across left ventricle B. To achieve the configuration of **FIG. 67**, the ends of threads **512** disposed proximally of shaft **522** in **FIG. 66** are tied together. Then the opposite ends of thread **522** are pulled proximally relative to respective thread pushers **500** until threads **512** are withdrawn from catheter shaft **522** and extend across chamber B. Thread pushers **500** can be withdrawn proximally from threads **512**. Joined threads **512** can be used as a tension member to assemble a transventricular splint. Preferably, however, after thread pushers **500** are removed from threads **512**, a tension member is connected to one of the free ends of thread **512** by, for example, tying the end of thread **512** to a loop formed in an end of a tension member. Then the remaining free end of thread **512** can be withdrawn proximally until both threads **512** are pulled from chamber B and the tension member extends across the chamber. Once the tension member extends across the chamber, the remainder of the splint can be assembled in a manner similar to that contemplated for the tension members placed in accordance with **FIGS. 38-43**.

[0192] It can be appreciated that the method of placing a tension member described with respect to **FIG. 64** can advantageously be performed by an open chest or less invasive route. The method described, however, lends itself particularly well to a less invasive approach where oppositely disposed lateral ports are used to manipulate string pushers **500** and an anterior port is used to access apex D by catheter **520**. As an alternative to the apical approach, snare **524** could be placed from an aortic or mitral valve approach. If the approach is by way of the aortic valve, the snare may be advanced thereto by way of the aorta from a carotid or femoral artery access point. The mitral valve approach could be made by way of a port or window. The mitral valve port may be particularly desirable if mitral valve repair or replacement is preformed in conjunction with splint implantation.

[0193] **FIGS. 68 and 69** illustrate yet another method of placing a tension member across ventricle B using snare **524**, and a thread pusher **500**. Unlike the method described with respect to **FIGS. 64-67**, the lateral approaches are

preferably used without requiring access to apex D. Catheter **520** is advanced from one side of chamber B and placed generally around distal tip **506** of shaft **504** of thread pusher **500** which is advanced into chamber B from the opposite side. Plunger **508** is depressed to push the coiled portion of thread **512** into chamber B. Thread **512** drifts toward aortic valve G and through snare **524** under the influence of blood flow.

[**0194**] As shown in **FIG. 69**, snare **524** is tightened around thread **512** and withdrawn from chamber B. It can be appreciated that catheter **520** and thread pusher **512** can be removed from thread **512** and a splint assembled in the manner described above with respect to the tension member placed in accordance with the method described in **FIGS. 64-67**. It can also be appreciated that this method can advantageously be applied to implant a splint either by an open chest or less invasively using two oppositely disposed lateral ports.

[**0195**] **FIG. 70** is a longitudinal cross sectional view of an alternate embodiment of a thread pusher **610**. Thread pusher **610** includes a thread insertion shaft **612** having a lumen **612** extending therethrough. Shaft **612** can have a curved distal end **614** which preferably includes a sharpened portion **618** for insertion through the heart wall into the left ventricle. A handle **620** is preferably disposed at the proximal end of shaft **612**. A plunger **622** is preferably disposed within shaft lumen **616**. Plunger **622** includes a distal end **626** and a proximal end preferably including a handle **628**. A lumen **624** extends through plunger **622**. A thread or filament **611** is shown disposed within shaft lumen **616** and plunger lumen **624**. Unlike thread pusher **500** of **FIG. 63**, the length of shaft **612** is preferably long enough that the portion of thread **611** to be advanced into the left ventricle can be disposed within lumen **616** without being coiled.

[**0196**] In use, distal tip **618** of thread pusher **610** is disposed in left ventricle B in a manner similar to that of tip **506** of thread pusher **500**. Plunger **622** is then advanced into shaft lumen **616** to advance thread **611** into the left ventricle. Thread **612** is preferably lightly friction within lumen **624** or held within lumen **624** by the user or holding cap **629**.

[**0197**] **FIG. 71** is a generally vertical cross section of left ventricle B showing a longitudinal cross sectional of a snare insertion tube **630** disposed through apex D. Insertion tube **630** preferably includes an elongate shaft **632** having an elongate lumen extending therethrough. An annular flange **638** is preferably disposed at the proximal end of shaft **632**. Disposed in engagement with, and distally of flange **638** is an annular felt pad **636**. A stylet **640** having an elongate shaft **642** and a hub **644** can be inserted within the lumen of shaft **632**.

[**0198**] In use, snare insertion tube **630** can be used to provide a stable access through apex D for catheter **520** when performing the procedure shown in **FIGS. 64-67** above. Insertion tube **630** can be advanced into apex D as shown. As insertion tube **630** is advanced into apex D, stylet **640** is preferably disposed therein to limit bleeding through the lumen through shaft **632**. Felt pad **636** is preferably sutured to apex D to limit bleeding around shaft **632** and stabilize insertion tube **630** on apex D. Stylet **640** is then removed and then catheter **520** can be advanced through insertion tube **630** to perform the splint implantation.

[**0199**] Up to this point, it has been assumed that access was obtained or obtainable to each end of the tension member for placement of an anchor or anchor pad thereon. Access to each end of the tension member placed across the left ventricle is generally obtainable by open chest access or lateral, anterior or posterior ports. It is contemplated, however, that under some circumstances, however, it may be difficult or undesirable to obtain access to one or both ends of the tension member. Under such circumstances, it may be desirable to be able to deliver an anchor or anchor pad to a wall of the ventricle to which direct access by open chest or port has not been obtained. In such an instance, it may be desirable to deliver the anchor or anchor pad from inside the heart to the outside.

[**0200**] **FIG. 72** is a cross sectional view of a portion of left ventricle B including a distal portion of a tension member **532** having balloon anchor **536** disposed at its distal end and outside of chamber B of heart A. Tension member **532** is preferably a tubular member such as a hypotube sealed at its distal end except for an orifice **534** disposed within balloon **536**. The distal end of tension member **532** including balloon **536** can be advantageously and preferably advanced to the position shown by using any of the methods and devices disclosed above which advance the tension member from inside the heart to outside, for example, the method and device described above with respect to **FIGS. 38-40**. Once the distal end of tension member **532** is advanced to the position shown, balloon **536** can be inflated from a collapsed position to the expanded position shown. Balloon **536** is preferably expanded using quick cure polymer such as cyanoacrylate or mixed two-part epoxy or other biocompatible substance which will allow balloon **536** to remain in an expanded position chronically. Saline is preferably used as inflation fluid if the balloon is inflated acutely.

[**0201**] **FIG. 73** is a similar view to that of **FIG. 72** except a tension member **542** having a pad **544** is shown disposed in left ventricle B. Pad **544** is preferably a coiled pad which can be delivered as described above with respect to the balloon of **FIG. 72**, except that it may be preferable to advance pad **544** through the heart wall through a tube. Coil **544** can be compressed within the tube and upon emerging from the tube and the heart, expand. Coil **544** could also could be formed from a shape memory alloy and be preset to expand at approximately body temperature.

[**0202**] **FIG. 74** is yet another example of an anchor pad deployable from inside the heart to outside the heart. Pad **554** is shown disposed at the end of the tension member **552**. Pad **554** includes two arms pivotally connected to tension member **522** by hinge **556**. Hinge **556** preferably allows arms **555** to rotate from a first position parallel and adjacent to tension member **552**, to a second position approximately perpendicular to tension member **552** as shown. To deploy pad **554**, pad **554** is advanced from the heart through the heart wall with arms **555** disposed in the first position until the arms are completely advanced to the outside of the wall. Then tension member **552** is drawn in the opposite direction such that the ends of arms **555** engage the heart wall and pivot into the second position as tension member **552** continues to be pulled.

[**0203**] **FIG. 75** is yet another embodiment of an anchor pad **565** which can be placed from inside the heart to outside by the methods applicable to the device of **FIG. 72**. Pad **565** includes two arms **564** hingably connected to tension member **562**. Arms **564** include a hinge **566**. Pad **565** can be

advanced through the heart wall while arms **564** are parallel and adjacent to each other. Once arms **564** have been advanced to the outside of the heart, a wire or line **568** connected to the distal end of arms **566** and extending proximally through tension member **562** can be pulled proximately to shorten the distance between the ends of arms **564** and bend arms **564** outward at hinges **566**.

[**0204**] **FIG. 76** is yet another embodiment of an anchor pad **574** disposed on a distal end of tension member **572**. Pad **574** has an umbrella-like shape, the top of the umbrella being disposed away from the heart wall and the broad base of the umbrella being disposed toward the heart wall. Pad **574** is advanced through the heart wall in a collapsed position. Pad **574** can be biased to expand upon passing through the heart wall or can be expanded in a manner similar to pad **554** of **FIG. 74**.

[**0205**] **FIG. 77** is a view of anchor or anchor screw **584** disposed at the distal end of a tension member **582**. Screw **584** unlike the anchor pads of **FIG. 72-76** does not have to pass through the heart wall to secure tension member **582** in place. Rather, anchor **584** has a corkscrew or auger shape. Screw **584** is anchored to the myocardium by rotating tension member **582** while advancing anchor **584** into the myocardium.

[**0206**] **FIG. 78** is a view of yet another embodiment of anchor pad **612** disposed on an end of a tension member **610**. Pad **612** is preferably a fabric such as dacron or PTFE. A fast acting adhesive can secure pad **612** to the heart wall as shown. The adhesive can be, for example, cyanoacrylate. The adhesive can be triggered by reaction with the heart wall tissue, be pressure sensor, be activated by an accelerator or energy source.

[**0207**] **FIG. 79** is a cross section of a portion of left ventricle B similar to that shown in **FIG. 72-78** except that the epicardium I is shown. The device of **FIG. 79** includes a tubular tension member **592** including an anchor or an epicardial jaw anchor **594** disposed at its distal end. Jaw anchor **594** is connected to a wire or line disposed through the lumen of tension member **592**. The jaw anchor **594** is biased to open when unrestrained by the distal end of tension member **592**. If wire **596** is pulled proximally, jaws **594** will engage the distal end of tension member **592** tending to close anchor jaws **594**, by a mechanism similar to that of the device of **FIG. 51**, except that anchor jaws **594** are not intended to cut but rather grip.

[**0208**] It should be noted that not only can the anchors and anchor pads of **FIGS. 72-79** be advantageously employed when one of the ends of the tension member extending outside the heart will not be directly accessible to deploy a pad thereon, but also where neither end of the tension member will be accessible to place a pad thereon. In such an instance, two tension members having anchors or anchor pads as shown in **FIGS. 72-79** can be placed through an apical approach similarly to how guide members **270** and **271** were placed in **FIG. 41**. Once the anchors or anchor pads are deployed, however, the two tension members are preferably connected to form effectively a single tension member.

[**0209**] **FIG. 80** is a vertical cross sectional view of the left ventricle B of heart A having apex D. For purposes of illustrating the deployment of two tension members and anchors or anchor pads without direct access to the distal ends of the tension members, outside the heart, for placement of the pads thereon, two tension members **532** having balloons **536** disposed at their distal ends are shown placed on left ventricle B. It can be appreciated that tension members **532** and balloons **536** can be placed on the heart in a manner similar to guide members **270** and **271** of **FIG. 41**. Then catheter tube **600** can be advanced over tension members **532**. Tension members **532** can then be drawn proximally to reduce the distance between pads **536** to create either a full cycle or restrictive splint.

[**0210**] **FIG. 81** is the same cross sectional view as **FIG. 80** except that catheter **600** has been removed from chamber B and a tension member fastener **602** has been placed to interconnect tension members **532**. Fastener **602** can be formed from a disc similar to pad **382** of **FIG. 49**, but form with an additional tension member receiving aperture **390**. To place fastener **602**, fastener **602** can be advanced through catheter **600** over tension members **532** by an elongate spreader. The spreader can be removed and fastener **602** clamped to tension members **532**. Then the catheter **600** can be removed to obtain the configuration shown in **FIG. 80**. It should also be noted that prior to removing catheter **600**, tension member cutter **420** of **FIG. 1** could be advanced over the tension members to remove the excess length shown extending through apex D.

[**0211**] It can be appreciated that the method of **FIGS. 80 and 81** can be preformed open chest or less invasively. When preformed less invasively, an anterior access port is preferably used. In addition to performing the methods of **FIGS. 80 and 81** by way of apex D, access could be gained to left ventricle B by way of the aortic valve or mitral valve as described above.

[**0212**] The effective length of the tension member between anchor pads **536** can be determined by knowing the overall length of each tension member and the length of catheter **600**. The effective length of the tension member will be the sum of the lengths of the tension members less two times the length of catheter **600** and less the length of each tension member extending proximally from catheter **600** when the distal end of catheter **600** abuts fastener **602**. If pads **536** were made from echogenic or radiopaque material the effective length of the tension could be estimated by echo imaging or fluoroscopic techniques. It can also be appreciated that the length of the tension member can be measured directly be advancing a measuring device into chamber B.

[**0213**] Numerous characteristics and advantages of the invention covered by this document have been set forth in the foregoing description. It will be understood, however, that this disclosure is, in many respects, only illustrative. Changes may be made in details, particularly in matters of shape, size and ordering of steps without exceeding the scope of the invention. The invention's scope is, of course, defined in the language in which the appended claims are expressed.

1-13. (canceled)

14. A method for placing on a diseased heart a device including a tether having two ends, said method comprising the steps:

passing the tether along a predetermined line of approximate placement position on the heart of the device,

attaching a first portion of the device to one end of the tether,

pulling a first portion of the device into approximate placement position with the tether,

attaching a second portion of the device to the second end of the tether,

sliding the second portion along the tether and placing the second portion of the device into approximate placement position abutting said first portion, and

connecting the two portions to one another.

15. A method according to claim 14, further comprising the step of passing the tether and a portion of the device through an opening in a pericardial reflection of the heart.

16. A method for placing on a diseased heart a device including a tether having two ends, said method comprising the steps:

passing a tether having two ends along a predetermined line of approximate placement on the heart of the device,

sliding a sheath over the tether,

attaching one end of the sheath and one end of the tether to a first portion of the device,

pulling the first portion of the device into approximate placement position on the heart,

disconnecting the sheath and sliding the sheath off the tether,

attaching a second portion of the device to the tether,

sliding the second portion along the tether and placing the second portion of the device into approximate placement position, and

connecting the two portions to one another.

17. A method according to claim 16, further comprising the step of passing the tether, sheath and a portion of the device through an opening in a pericardial reflection of the heart.

18. A method for placing a device in a diseased heart, the device including a first automatically reversibly collapsible anchor and a first tether attached thereto, and a second automatically reversibly collapsible anchor and a second tether attached thereto, said method comprising the steps:

passing a sheath through a lumen into an interior portion of a chamber of the heart,

sliding the first collapsible portion in a collapsed position through the sheath and through a first predetermined portion of a wall of the chamber and causing the first collapsible anchor to expand,

sliding the second collapsible portion in a collapsed position through the sheath and through a second predetermined portion of a wall of the chamber and causing the second collapsible anchor to expand, and

connecting a free end of the first tether to a free end of the second tether.

19. A method for introducing a transventricular tension member between substantially opposing walls of a heart chamber and anchor members on each end thereof, the anchor members being expandable from a compressed configuration in which the anchor is confined to a relatively small diameter to an expanded configuration in which one end of the anchor is expanded to a relatively larger diameter including a relatively planar surface, and the anchor member is attachable to a tension member extending away therefrom, said method comprising the steps:

endoluminally introducing a first anchor into an interior of the chamber in the compressed configuration and causing the first anchor to pass through a wall of the chamber to the exterior thereof,

causing the first anchor to expand to its expanded configuration with the planar surface resting against an exterior surface of the chamber wall,

endoluminally introducing a second anchor into an interior of the chamber in a compressed configuration and causing the second anchor to pass through a wall of the chamber to the exterior thereof,

causing the second anchor to expand to its expanded configuration with the planar surface resting against an exterior surface of the chamber wall, and

connecting the first and second anchors to a tension member.

* * * * *