L. GSCHWIND.

MANHOLE FRAME AND COVER.

APPLICATION FILED JUNE 7, 1920.

1,417,377. Patented May 23, 1922.

Fig. 1

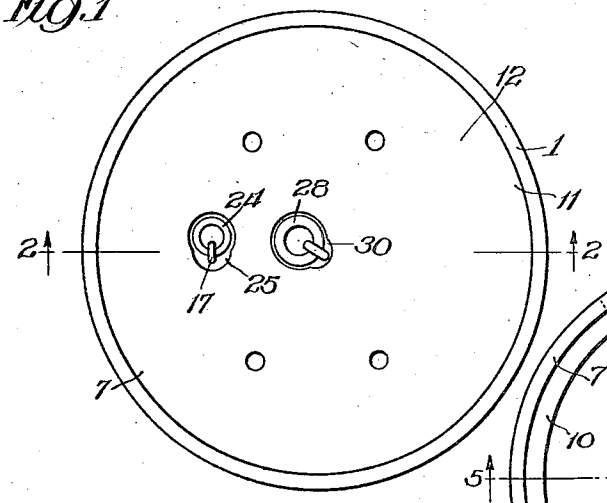

Fig. 6

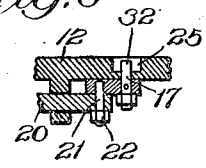

Fig. 4

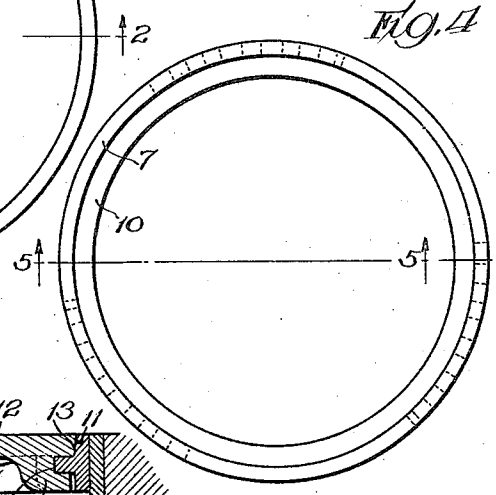

Fig. 2

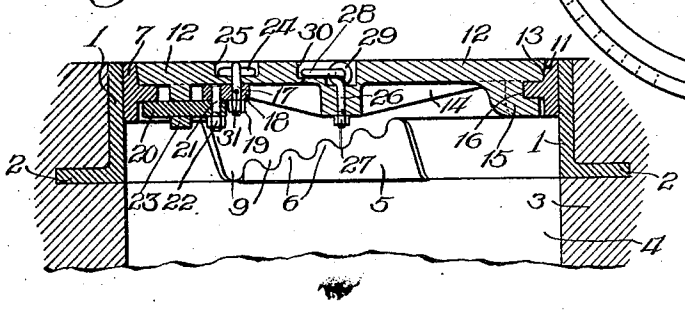

Fig. 5

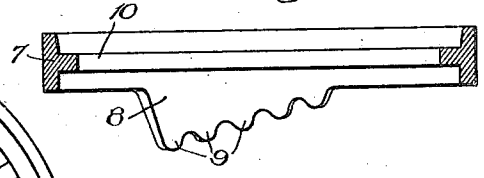

Fig. 3

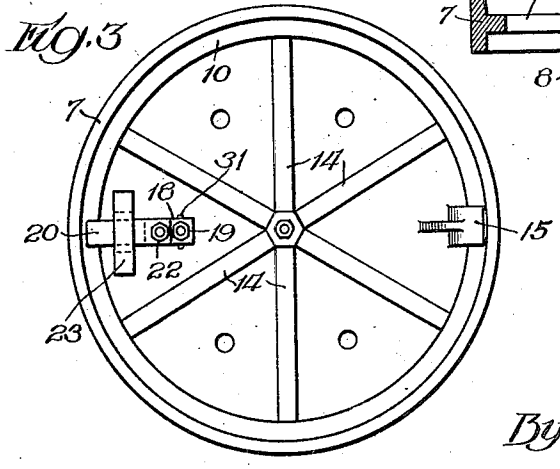

Inventor
Leon Gschwind
By Munn & Co.
Attys.

UNITED STATES PATENT OFFICE.

LEON GSCHWIND, OF YOUNGSTOWN, OHIO, ASSIGNOR TO MORRIS BONNEVIE, OF CHICAGO, ILLINOIS.

MANHOLE FRAME AND COVER.

1,417,377. Specification of Letters Patent. Patented May 23, 1922.

Application filed June 7, 1920. Serial No. 387,267.

To all whom it may concern:

Be it known that I, LEON GSCHWIND, a citizen of the United States, and a resident of Youngstown, in the county of Mahoning and State of Ohio, have invented a new and useful Improvement in Manhole Frames and Covers, of which the following is a full, clear, and exact description.

An object of my invention is to provide a novel form of manhole frame and cover in which a vertically adjustable inner frame fits within an outer frame.

A further object of my invention is to provide a device of the type described in which means is provided for locking the cover in position, means also being provided to permit the unlocking of the cover at will.

A further object of my invention is to provide a device of the type described that is thoroughly practical commercially.

Other objects and advantages will appear in the following specification, and the novel features of the invention will be particularly pointed out in the appended claim.

My invention is illustrated in the accompanying drawings, forming part of this application, in which—

Fig. 1 is a plan view of the device in operative position,

Fig. 2 is a section along the line 2—2 of Fig. 1,

Fig. 3 is a bottom plan view of a portion of the device,

Fig. 4 is a plan view of a portion of the device,

Fig. 5 is a section along the line 5—5 of Fig. 4,

Fig. 6 is a sectional view of a fragmentary portion of a modified form of the device.

In carrying out my invention I provide a cylindrical outer frame member 1, which is formed with an outwardly extending flange 2 at its lower end. The frame member 1 is adapted to be embedded in concrete 3 or the like about an opening 4 in the manner pictured in Fig. 2 of the accompanying drawings. It will be noted that the flange 2 serves as an anchor for the device.

The outer frame member 1 is fashioned with a plurality of angular abutments 5 which project inwardly. The abutments are located at spaced distances apart around the inner wall of the frame member 1 adjacent the lower end thereof and are formed with their inclined upper edge provided with rounded teeth 6, as clearly shown in the drawings.

A second or inner frame member 7, which is also cylindrical in shape, is formed with angular prolongations 8 which extend downwardly from its lower end. It will be noted that the inclined lower edge of the angular prolongations 8 are provided with rounded teeth 9 which are arranged to mesh with the rounded teeth 6 of the angular abutments 5, whereby the second frame member 7 is supported by the frame member 1 and is adjustable vertically with respect thereto. The frame member 7 is formed with an inwardly extending annular rib 10 which is located near its upper end. The inner wall of the frame member 7 above the annular rib 10 is beveled at 11, as best seen in Fig. 2.

A cover or lid portion 12, which is preferably of the shape shown in the drawings, is adapted to close the upper end of the frame member 7, being seated upon the annular rib 10. The edge of the cover 12 is beveled at 13 to assure a close fit with the beveled portion 11 of the inner frame 7. The cover 12 may be molded or formed with its upper surface plain or ornamented with any desired design. The under surface of the cover 12 is provided with radially extending tapering ribs 14 which greatly strengthen the same.

A boss 15 formed with a slot or recess 16, adapted to receive the annular rib 10, is formed integrally with the cover 12, as best seen in Fig. 2 of the drawings. It is obvious that the boss 15 may be formed separately from the cover 12 and secured to the under surface thereof in any suitable manner, as by welding.

In order to securely maintain the cover 12 in position to close the frame 7, I provide a locking device that is adapted to cooperate with the boss 15. In attaining this object I provide a bolt or pin 17, which extends through the cover 12 at a point diametrically opposite to the boss 15. A bar 18 is rigidly secured to the lower end of the bolt or pin 17 in any suitable manner, as by passing a pin 31 transversely through the bolt 17 and the bar 18. A nut 19 is screwed on the end of the bolt 17 to further prevent displacement of the bar 18. The outer end of the bar 18 is connected with the inner end of a second

bar 20 by means of a bolt 21 and a nut 22. The bolt 21 acts as a pivot about which the bar 20 may be moved. The bar 20, which serves as the bolt in the fastening device, extends through a U-shaped retaining member or keeper 23 which is formed integrally with the cover 12 or may be rigidly secured to the under surface thereof in any suitable manner, as by welding. It is to be noted that the end of the bar 20 is in position to engage the under side of the annular rib 10 when the locking device is in the position pictured in Fig. 2 and consequently, since the annular rib 10 at a diametrically opposite point is engaged by the slot 16 in the boss 15, the cover 12 is securely maintained in position. A ring 24 is connected with the upper end of the pin 17 to present a convenient means for operating the locking device. A recess 25 is provided in the upper surface of the cover 12 to receive the ring 24.

In the modified form of the device, a fragmentary portion of which is pictured in Fig. 6 of the accompanying drawings, the pin 17 is formed with a squared upper end 32 which is adapted to receive a key or the like (not shown) such as is ordinarily used in operating units of water works' plants, since it is sometimes desired to operate the locking device by means of such a key.

An eye bolt 26 extends through the center of the cover 12 and has a nut 27 screwed on its lower end. Its upper end, which is formed into an eye 29, connects with a ring 28 which is normally disposed in a recess 30 which is provided in the upper surface of the cover 12. The ring 28 is provided to facilitate the removal of the cover 12 from the frame 7, since the ring 28 may be grasped by hand and the cover 12 lifted from its seat on the annular rib 10.

From the foregoing description of the various parts of the device, the operation thereof may be readily understood and requires no detailed description. The locking device described in the foregoing is operated by rotating the pin or bolt 17. Since the bar 18 has a pivotal connection with the inner end of the bar 20, which is the latching bolt of the device, rotation of the pin 17 will occasion a movement of the bar 20 toward the center of the cover 12 until the end of the bar 20 no longer engages the under side of the annular rib 10. The cover 12 may then be removed from the frame member 7.

One of the advantages of the device lies in the extensible feature of the same. It is obvious that when the inner frame member 7 is rotatably moved, the rounded teeth 9 will successively engage the upper portion of the frame member 7 to project above the ground level. Consequently the possibility of any person falling through the manhole frame 7 when the cover 12 has been removed, is reduced to a minimum.

I claim:

In a device of the class described, a frame member formed with an inwardly extending annular rib positioned at a spaced distance from the upper edge thereof, a closure for said frame member arranged to rest upon the upper surface of said annular rib, said closure being provided with a boss at its outer edge, said boss having a slot adapted to receive said rib, whereby a portion of the boss underlies the latter when the closure is in operative position, said closure being also provided with an integral guide keeper depending from the lower surface thereof below the plane of said rib, and positioned at a point diametrically opposite said boss, a locking member carried by said closure and guided by said keeper, said locking member being arranged for movement into and out of operative engagement with the under surface of said rib, and means extending through said closure and operable at will externally thereof for operating the locking member.

LEON GSCHWIND.