(12) INTERNATIONAL APPLICATION PUBLISHED UNDER THE PATENT COOPERATION TREATY (PCT)

CORRECTED VERSION

(19) World Intellectual Property Organization
International Bureau

(43) International Publication Date
08 July 2021 (08.07.2021)

WIPO | PCT

(10) International Publication Number
WO 2021/138424 A8

(51) International Patent Classification:
G06F 3/06 (2006.01) *G06F 13/16* (2006.01)
G06F 12/02 (2006.01)

(21) International Application Number:
PCT/US2020/067470

(22) International Filing Date:
30 December 2020 (30.12.2020)

(25) Filing Language: English

(26) Publication Language: English

(30) Priority Data:
62/955,719 31 December 2019 (31.12.2019) US
17/111,195 03 December 2020 (03.12.2020) US

(63) Related by continuation (CON) or continuation-in-part (CIP) to earlier application:
US 17/111,195 (CON)
Filed on 03 December 2020 (03.12.2020)

(71) Applicant: **MICRON TECHNOLOGY, INC.** [US/US]; 8000 So. Federal Way, Boise, Idaho 83716-9632 (US).

(72) Inventors: **TANPAIROJ, Kulachet**; 1427 Loyola Drive, Santa Clara, California 95051 (US). **GYLLENSKOG, Christian M.**; 695 W Christopher St, Meridian, Idaho 83642 (US). **PALMER, David Aaron**; 4100 N Bristol St, Boise, Idaho 83704 (US). **HUANG, Jianmin**; 116 Club Dr, San Carlos, California 94070 (US).

(74) Agent: **PERDOK, Monique M.** et al.; Schwegman Lundberg & Woessner, P.A., P.O. Box 2938, Minneapolis, Minnesota 55402 (US).

(81) Designated States *(unless otherwise indicated, for every kind of national protection available)*: AE, AG, AL, AM, AO, AT, AU, AZ, BA, BB, BG, BH, BN, BR, BW, BY, BZ, CA, CH, CL, CN, CO, CR, CU, CZ, DE, DJ, DK, DM, DO, DZ, EC, EE, EG, ES, FI, GB, GD, GE, GH, GM, GT, HN, HR, HU, ID, IL, IN, IR, IS, IT, JO, JP, KE, KG, KH, KN, KP, KR, KW, KZ, LA, LC, LK, LR, LS, LU, LY, MA, MD,

(54) Title: PERFORMANCE OF MEMORY SYSTEM BACKGROUND OPERATIONS

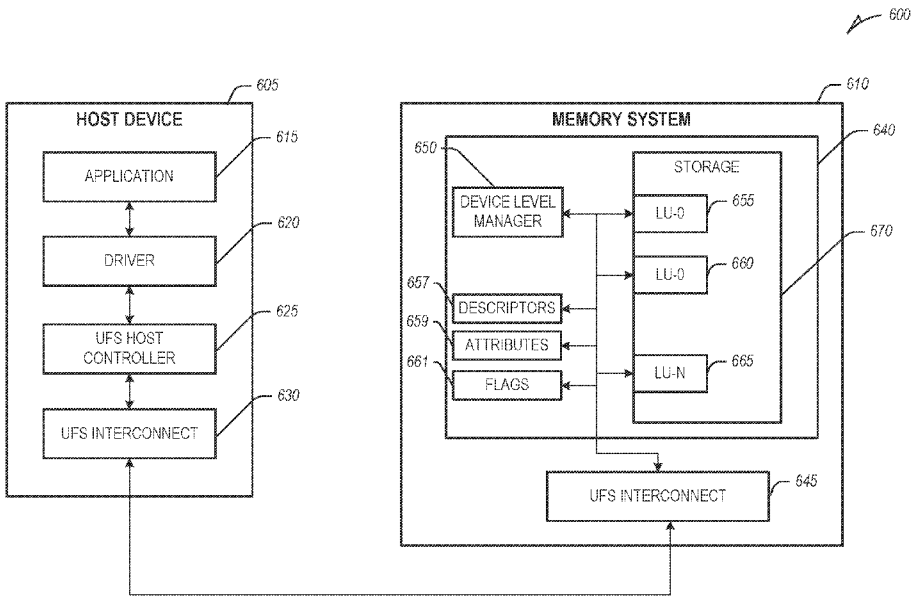

FIG. 6

(57) Abstract: Various examples are directed to devices and methods involving a host device and a memory system, the memory system comprising a memory controller and a plurality of memory locations. The memory system may send to the host device a first message describing background operations to be performed at the memory system. The memory system may receive from the host device a second message indicating permission to execute the background operations and may begin to execute at least one background operation.

[Continued on next page]

WO 2021/138424 A8

ME, MG, MK, MN, MW, MX, MY, MZ, NA, NG, NI, NO, NZ, OM, PA, PE, PG, PH, PL, PT, QA, RO, RS, RU, RW, SA, SC, SD, SE, SG, SK, SL, ST, SV, SY, TH, TJ, TM, TN, TR, TT, TZ, UA, UG, US, UZ, VC, VN, WS, ZA, ZM, ZW.

(84) **Designated States** *(unless otherwise indicated, for every kind of regional protection available)*: ARIPO (BW, GH, GM, KE, LR, LS, MW, MZ, NA, RW, SD, SL, ST, SZ, TZ, UG, ZM, ZW), Eurasian (AM, AZ, BY, KG, KZ, RU, TJ, TM), European (AL, AT, BE, BG, CH, CY, CZ, DE, DK, EE, ES, FI, FR, GB, GR, HR, HU, IE, IS, IT, LT, LU, LV, MC, MK, MT, NL, NO, PL, PT, RO, RS, SE, SI, SK, SM, TR), OAPI (BF, BJ, CF, CG, CI, CM, GA, GN, GQ, GW, KM, ML, MR, NE, SN, TD, TG).

Published:

— *with international search report (Art. 21(3))*

(48) **Date of publication of this corrected version:**
22 September 2022 (22.09.2022)

(15) **Information about Correction:**
see Notice of 22 September 2022 (22.09.2022)