May 26, 1953 J. L. JACOBSON 2,639,956

LATERALLY MOVING DETACHABLE LEG CONSTRUCTION

Filed Aug. 24, 1951

Fig. 1.

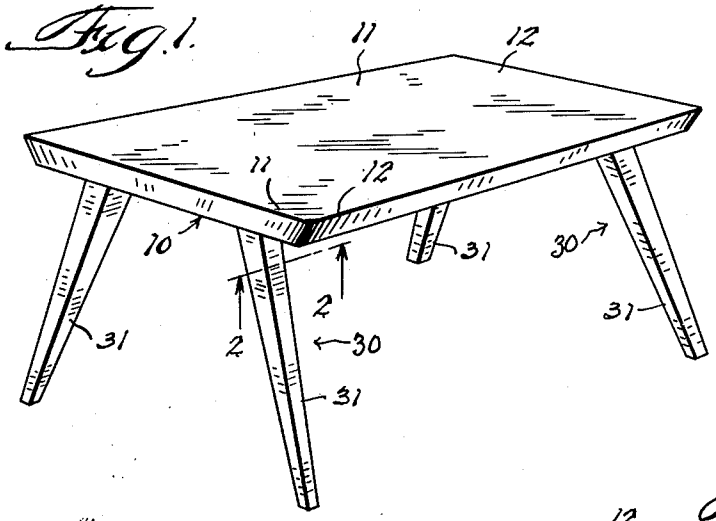

Fig. 2.

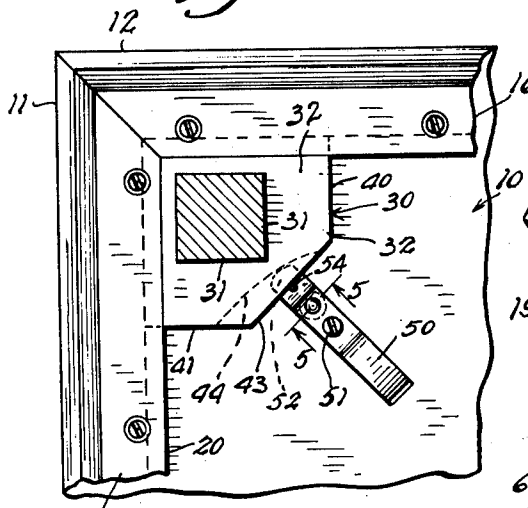

Fig. 3.

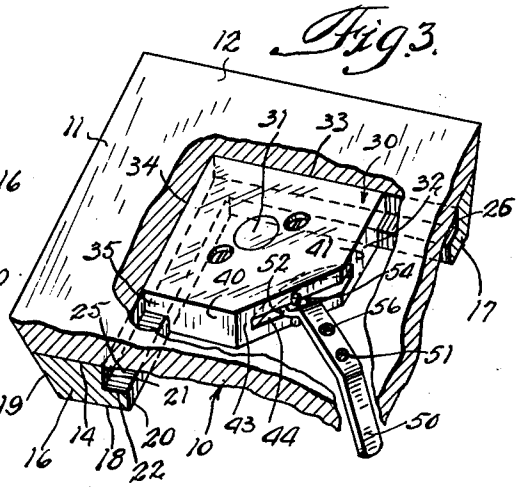

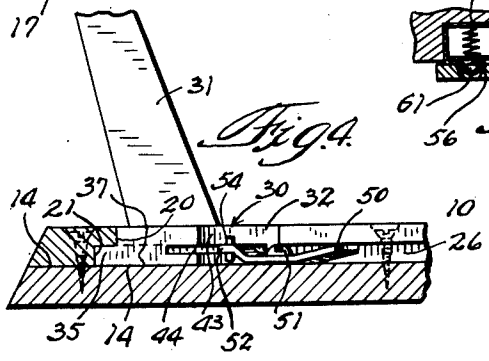

Fig. 4.

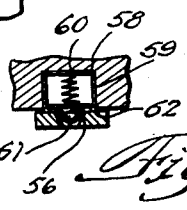

Fig. 5.

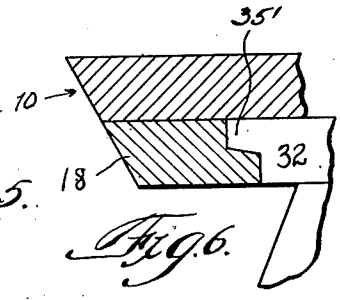

Fig. 6.

INVENTOR.

Jack L. Jacobson.

BY. Robert L Kahn

Attty

Patented May 26, 1953

2,639,956

UNITED STATES PATENT OFFICE

2,639,956

LATERALLY MOVING DETACHABLE LEG CONSTRUCTION

Jack L. Jacobson, Glencoe, Ill.

Application August 24, 1951, Serial No. 243,491

6 Claims. (Cl. 311—100)

1

This invention relates to a laterally moving detachable leg construction for furniture. In the manufacture of many different articles of furniture, such as tables, console-types of radios and television sets, cabinets, it is desirable that the legs of the article be readily detachable so that compact shipping packages may be provided. In such cases, it is advantageous if the legs may be maintained in a detached condition up to the time that the article or piece is actually delivered to the ultimate purchaser. Furthermore, it is highly advantageous that the attachment of the legs to the device or piece of furniture be simple and foolproof so that the purchaser himself may accomplish this, thus resulting in a saving to the purchaser.

In addition to the above, it is frequently desirable to design such pieces of furniture as a radio or television cabinet so that the cabinet may be sold either as a table model or may be equipped with legs if sold as a console model. In such case, it is desirable from a cost angle that the base structure of the cabinet be simple and readily adaptable to either form without substantial expense or without useless fixtures or features where legs are not to be added.

There are also instances where, after a table, or similar device, is in a home, it is desirable that the legs be readily attachable or detachable so that the device may be used or stored without trouble. In such case, it is essential that the leg structure be simple, foolproof and sturdy. While there are many detachable leg structures, such constructions usually lack the three features mentioned above.

This invention provides a construction whereby little change in conventional cabinet base construction is required to accommodate the improved leg. The modified base construction has a conventional appearance and when not provided with legs will generally function as a normal base. The leg construction embodying the present invention is simple and may be attached or detached quickly, easily, and in a foolproof manner.

The invention will best be understood by describing the same in connection with the drawings showing one form which the invention may take, it being understood, however, that variations are possible.

Referring now to the drawings:

Figure 1 shows a perspective view of a table having the improved detachable leg construction;

Figure 2 is a bottom view taken along line 2—2

2

of Figure 1 showing the structure at one corner of the table;

Figure 3 is a perspective top view of the construction shown in Figure 2, with certain parts broken away;

Figure 4 is a side view of the corner construction;

Figure 5 is a sectional detail of the catch, the detail being taken along line 5—5 of Figure 2;

Figure 6 is a detail showing a modified structure.

While the drawings show the invention as being applied to a table, it is understood that this is merely exemplary. In practice, the construction may be applied to the bottom of such devices as china cabinets, radio and television cabinets, bridge tables, camp tables, and the like. Furthermore, the detachable leg construction need not necessarily be applied only to a corner. It may be disposed at any intermediate part of an elongated base or table structure.

Referring now to Figures 1 to 5 inclusive, 10 may be the base panel or bottom of a table top, cabinet, or any other desired article to which detachable legs may be applied. Base 10 may be of wood, metal or any other material and has marginal portions 11 and 12 forming a corner. For simplicity and ease of manufacturing, as well as interchangeability, it is preferred to have the corner formed by margins 11 and 12 at a conventional right angle. However, any other angle may be used, either less or greater than a right angle. The two marginal portions may meet to form a curved region. Bottom face 14 of base 10 is generally smooth in the region where the detachable construction is to be applied. This does not necessarily mean that this surface must be finished.

Rigidly secured to base 10, at margins 11 and 12, are wooden members 16 and 17 each having a generally L-shaped section. Thus, wooden member 16 has bottom face 18, outer side 19 and inner stepped portions 20 and 21 connected together by ledge 22. Bottom face 18 of the wooden member may have any desired shape or finish. The same is true of outer face 19. As shown, outer face 19 merges with the side of the base and, in practice, the two may be finished together as one unit as far as the sides are concerned. It is possible to have base 10 integral with members 16 and 17 and rout the channels out.

Wooden member 17 is similar in construction to wooden member 16 and the two are mitered or otherwise joined at the corner. As is clear from Figures 2, 3 and 4, wooden members 16 and

17 provide channels 25 and 26 meeting at the corner. The construction so far described is applied to the desired article of furniture to be equipped with legs. While this construction is most conveniently applied to the device during manufacture, it may be applied later with members 16 and 17 being set inwardly from any finished sides so that these wooden members will not impair the appearance of the article. As shown, wooden-channel-forming members 16 and 17 are firmly bolted or retained in position by screws. Reliance may be had on glue or cement or a combination of glue and bolts. Any other fastening means may be used. Members 16 and 17 may be of metal if desired.

Cooperating with the above construction are detachable legs each one generally indicated by numeral 30. Each detachable leg comprises leg portion proper 31, which may have any desired shape, dimension or the like. Leg 31 has the top thereof rigidly and permanently attached to leg plate 32. Leg plate 32 may be of wood and has two edge portions 33 and 34 complementarily shaped to fit the channel construction formed by members 16 and 17. Thus as shown, leg plate 32 at margins 33 and 34 has a stepped construction providing tongues 35 dimensioned to fit snugly into channels 25 and 26. Top face 37 (Fig. 4) of the leg plate bears against the opposing surface of base 10 and it is preferred to have face 37 of the plate smooth enough so that a good fit against the opposing faces is provided. Thus a broad area of support for the leg plate is provided not only at the corner of the base but also at the channels into which the plate tongues fit.

Leg plate 32 may have any desired dimensions along margins 33 and 34, this generally depending upon the load imposed upon the legs. Leg plate 32 has free sides 40 and 41, as shown, and has side 43 formed by cutting the corner of the plate material, this side connecting sides 40 and 41. Side 43 is preferably opposite the corner of the leg plate formed by the intersection of marginal portions 33 and 34. It is also desirable to have leg 31 join the leg plate between side 43 and the corner. Side 43 of the leg plate is provided with slot 44 extending inwardly of the plate and generally varying in depth as shown. Slot 44 at its deepest end extends up to side 41 and is accessible from that end thereof. The slot 44 stops short of the end of face 43 where this face intersects with side 40.

Cooperating with slot 44 is lever 50 pivotally secured at 51 to base 10. Lever 50 has end portion 52 which enters slot 44 when the lever is positioned as shown in Figures 2 and 3. Portion 52 of the lever is preferably provided with pin 54 extending through the lever at right angles to the same. As shown, pin 54 bears against side 43 on opposite sides of slot 44 in the locked position of the lever. Instead of pin 54, flat ears or plates may be provided for more extensive contact with face 43. However, the construction as shown is simple and effective.

In the locked position of lever 50, it is not essential that portion 52 of the lever actually engage the bottom of slot 44. Thus precision in cutting the slot is not required. In order to maintain lever 50 in the locked position, a simple locking means may be provided. As shown, lever 50 has aperture 56, this being preferably counter-sunk on the inside face of the lever where it is opposed to face 14. Disposed underneath the counter-sunk apertured portion of the lever when

the lever is in a locked position and recessed into the base is member 58 consisting of cup 59 having therein spring 60 carrying cap 61. Cover 62 for the cup prevents cap 61 from being pushed out of the cup. Such locking devices are well known in the art and are widely used.

In the locking position of lever 50, cap 61 will engage counter-sunk aperture 56 in the lever and maintain the same in locked position. From this locked position, the lever may be turned in one direction only for unlocking purposes. As shown in Figure 2, lever 50 can only be turned counter-clockwise to an unlocking position where finger portion 52 will be clear of the slotted leg plate. It is more convenient to have the locking portion of lever 50 disposed between the pivot and portion 52. The remaining part of the lever may be bent clear of surface 10 to function as a handle. This however may be varied so that the locking portion of the lever is on the other side of the pivot.

By properly proportioning the various parts, leg plate 32 will fit snugly in position and be maintained tightly when lever 50 is locked. By controlling the depth of slot 44, it will be impossible to move lever 50 beyond its locking position. When the lever is moved to an unlocking position, the leg plate may be removed.

The construction so far described need not necessarily be disposed at a corner. Thus channel-forming members 16 and 17 may be disposed at an intermediate portion of a table or other article of furniture.

Referring to Figure 6, a modified form of the invention is shown, wherein tapers are provided at the inter-fitting channel and tongue. Thus tongue 35' is tapered as shown and fits into correspondingly tapered channels.

What is claimed is:

1. A detachable leg construction for furniture, or the like, comprising a base member having a substantially flat body surface having generally L-shaped portions forming a corner construction and providing a pair of intersecting channels, a detachable leg assembly comprising a leg and leg plate carried at the top end of said leg, said leg plate having a flat surface to rest against the flat base surface, said leg plate having two adjacent marginal portions complementarily shaped to said L-shaped members to provide tongues for entry into said channels when said leg plate is flat against the base surface, said leg plate having a flat side opposite the corner where the channels intersect, and means pivotally secured to said base surface and movable to a locking position for engaging the flat side of said leg plate for maintaining said leg plate locked in position, said movable means having an unlocking position where said means are clear of said leg plate to permit the same to be removed.

2. A detachable leg construction for furniture, or the like, comprising a base surface having a pair of generally L-shaped portions forming a corner construction and providing intersecting channels, a detachable leg assembly comprising a leg and a leg plate permanently joined thereto at the top of said leg, said leg plate being flat and having two adjacent marginal portions shaped to provide tongues to fit into the channels when the leg plate is positioned against the base surface, said leg plate having a straight side opposite the corner formed by the intersecting channel, said side being slotted, a lever pivotally secured on said base and movable to a

locking position, said lever in its locking position having a portion to engage the slotted portion of the leg plate for wedging the leg plate into position.

3. The construction according to claim 2, wherein said leg plate has a slot extending along the side generally parallel to the base surface and wherein said pivotal means consists of a lever to enter the slot and wherein means are provided for engaging the plate side.

4. The structure according to claim 2, wherein the leg plate slot tapers in depth, the taper being such that the locking lever can move in only one direction from an unlocking position to a locking position and thereafter stop.

5. An article of furniture having a base structure for accommodating detachable legs, said base structure having at each leg position a pair of generally L-shaped portions forming a corner construction and providing intersecting channels, a lever pivotally secured to said base at a point spaced from the channel intersection, said lever having a locking position where it points substantially toward said channel intersection and

an unlocking position substantially at right angles to the locking position.

6. For use with the furniture construction as set forth in claim 5, a detachable leg comprising a leg proper carrying a leg plate at its upper end, said leg plate having two complementarily-shaped sides for interfitting with the channels, said plate having the side opposite the intersection of the shaped sides flat with a slot therein for accommodating the locking lever, said lever in its locking position wedging into the slot and holding the leg plate locked.

JACK L. JACOBSON.

References Cited in the file of this patent

UNITED STATES PATENTS

Number	Name	Date
205,746	Houston	July 9, 1878
655,358	Smyth	Aug. 7, 1900
772,462	Gruender	Oct. 18, 1904
1,879,087	Chomik	Sept. 27, 1932
1,951,884	Seward	Mar. 20, 1934
2,203,987	Galante	June 11, 1940
2,520,810	Ohlsson	Aug. 29, 1950