US 20190322321A1

(19) **United States**

(12) **Patent Application Publication** (10) **Pub. No.: US 2019/0322321 A1**

Schwartz et al. (43) **Pub. Date: Oct. 24, 2019**

(54) **REFUSE BODY ADAPTER**

(71) Applicant: **Oshkosh Corporation**, Oshkosh, WI (US)

(72) Inventors: **Leslie Schwartz**, Owatonna, MN (US); **Robert Ryan**, Oshkosh, WI (US); **Matthew Deinema**, Oshkosh, WI (US); **John Kellander**, Oshkosh, WI (US); **Emily Davis**, Rochester, MN (US); **Rob Messina**, Oshkosh, WI (US)

(73) Assignee: **Oshkosh Corporation**, Oshkosh, WI (US)

(21) Appl. No.: **16/390,769**

(22) Filed: **Apr. 22, 2019**

Related U.S. Application Data

(60) Provisional application No. 62/661,482, filed on Apr. 23, 2018.

Publication Classification

(51) **Int. Cl.**
B62D 27/06 (2006.01)
B62D 21/18 (2006.01)

(52) **U.S. Cl.**
CPC ***B62D 27/06*** (2013.01); *B65F 2003/008* (2013.01); ***B62D 21/18*** (2013.01)

(57) **ABSTRACT**

A refuse body adapter includes a sub-frame assembly, a sub-frame adapter, and a spacer. The sub-frame assembly is configured to be coupled to a cargo body. The sub-frame adapter is configured to be coupled to a chassis of a vehicle. The spacer is coupled to both the sub-frame assembly and the sub-frame adapter. The spacer is disposed in a gap formed between the sub-frame assembly and the sub-frame adapter. A thickness of the spacer may be adjusted to accommodate different gap sizes between the sub-frame assembly and the sub-frame adapter.

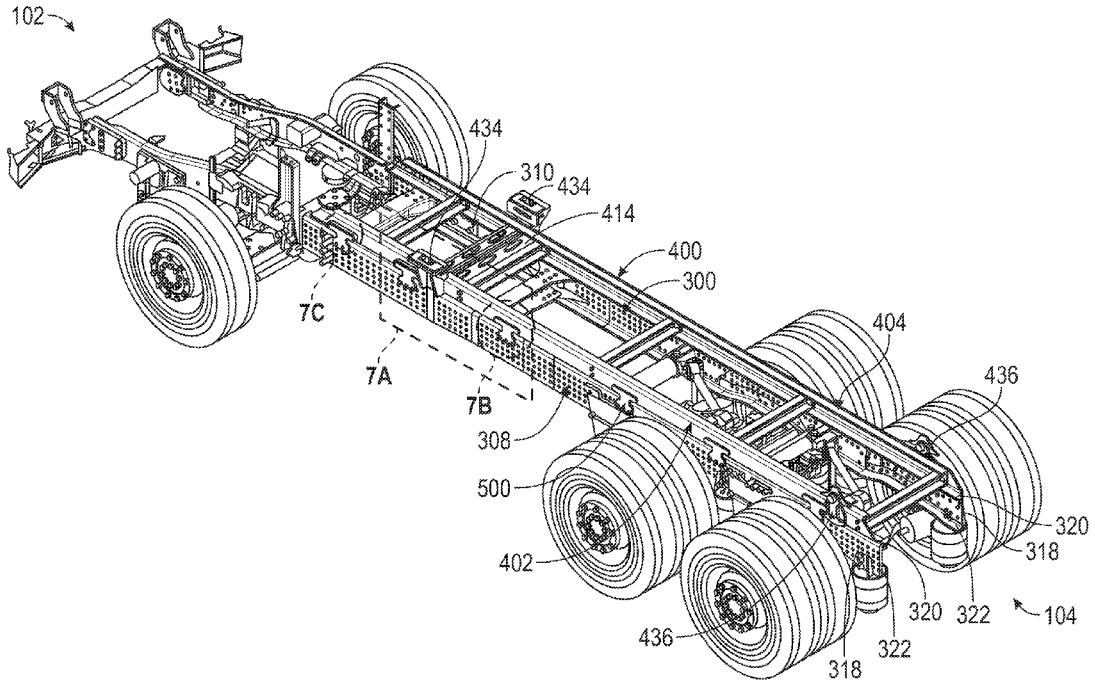

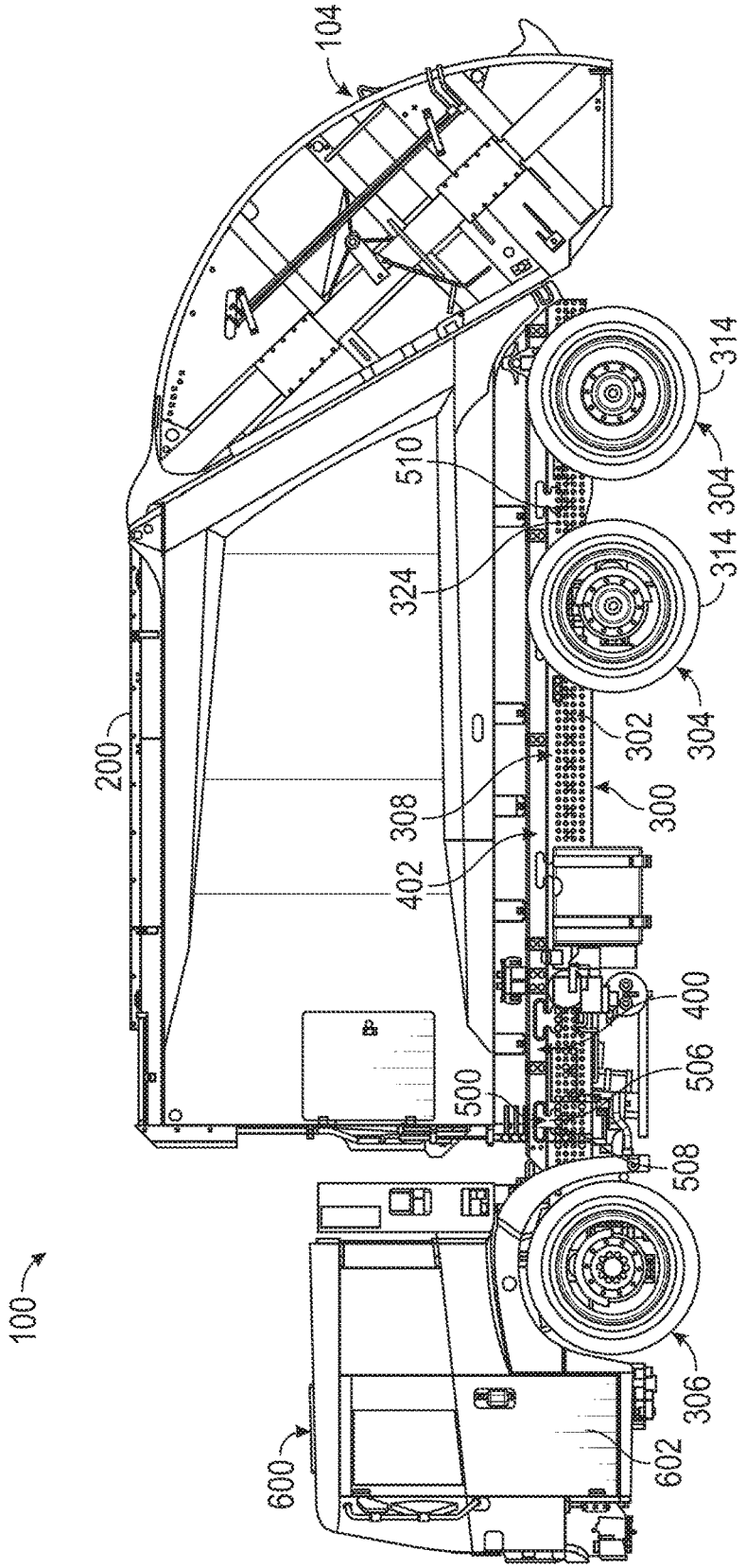
104
314
510
314 304
324
200
302
304
308
300
402
400
506
500
508
100
306
602
600

FIG. 1

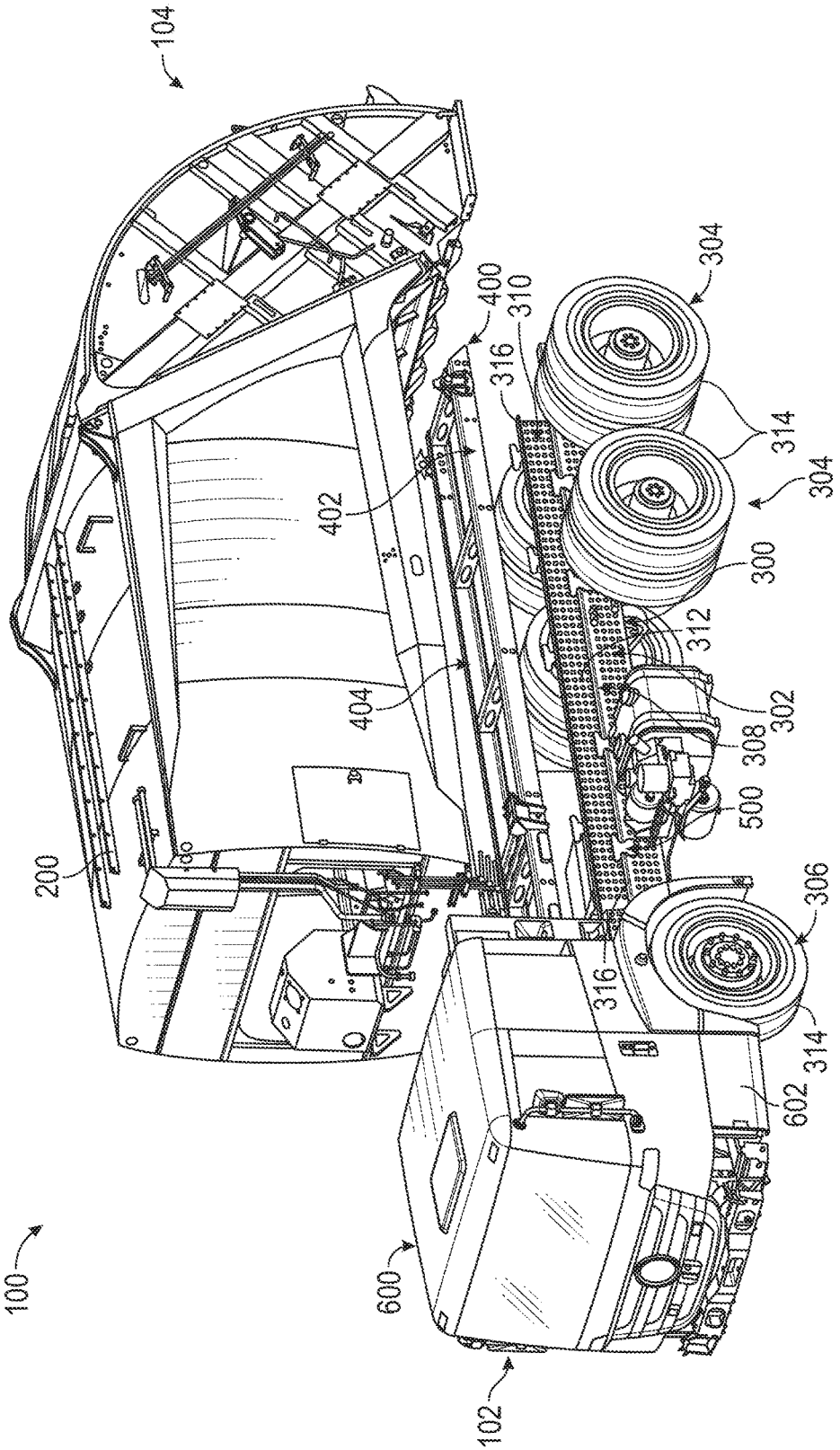
104
304
400
310
316
314
304
402
300
312
404
302
308
500
200
306
316
314
602
100
600
102

FIG. 2

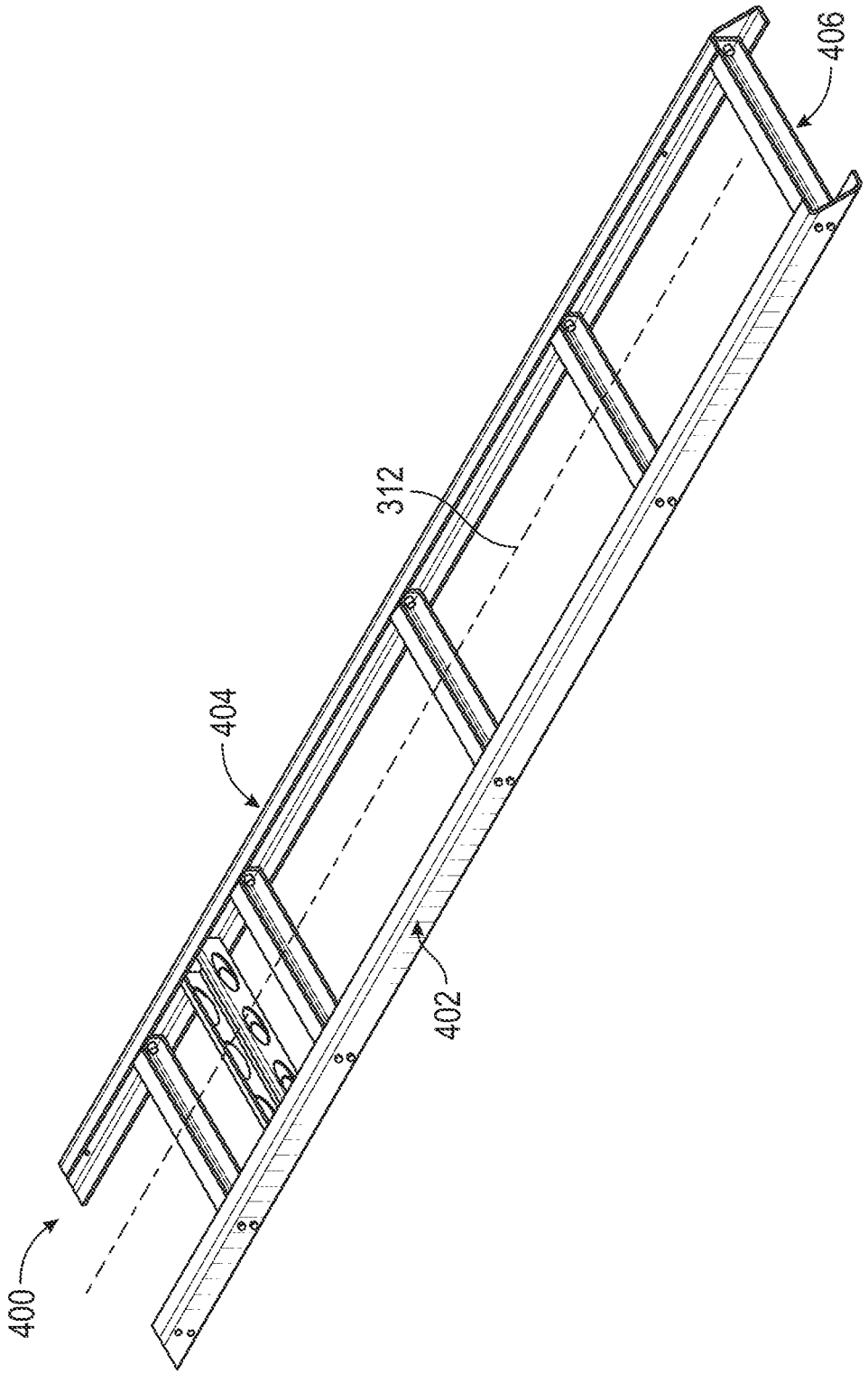

FIG. 3

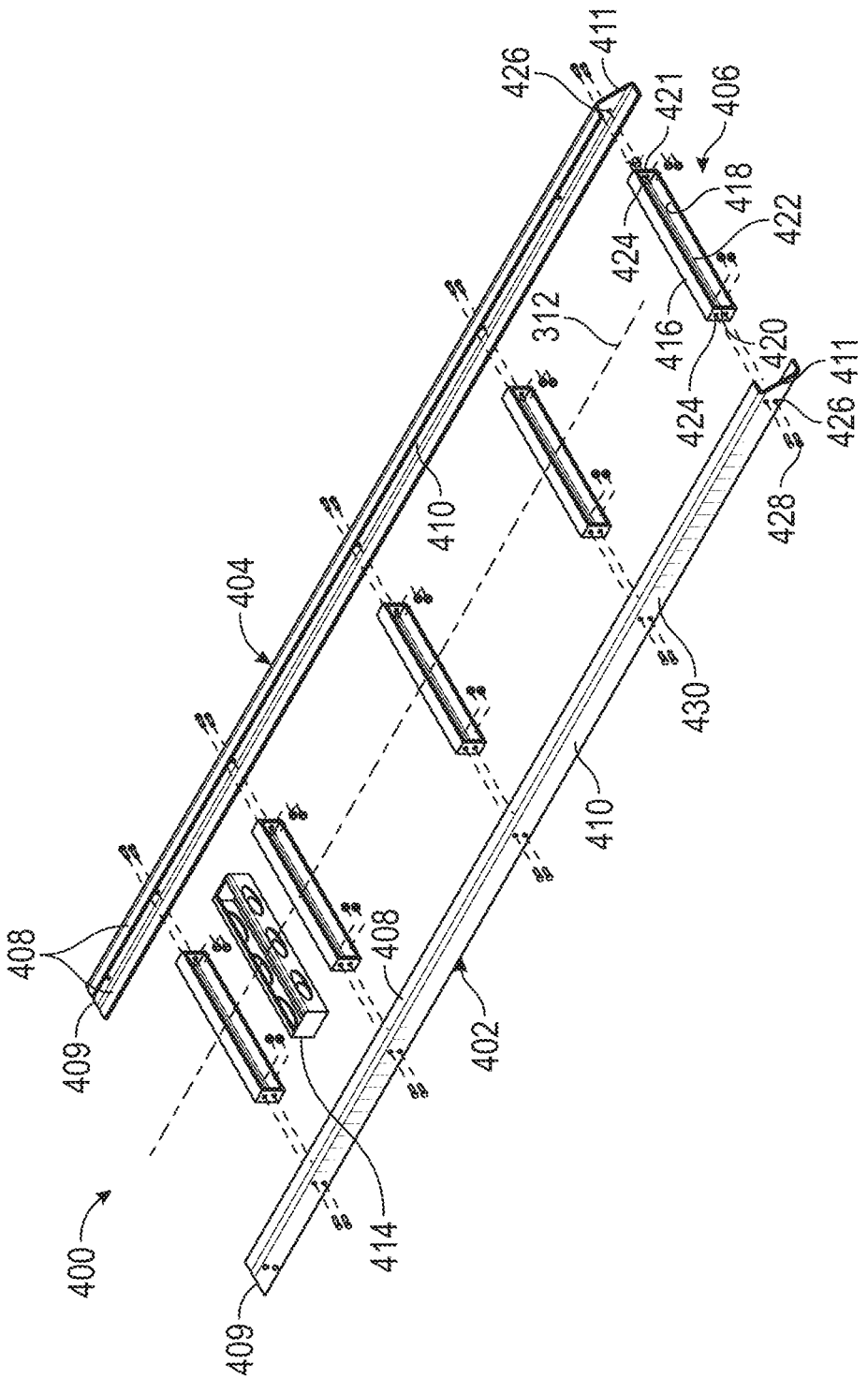
400
402
404
406
408
409
410
411
312
414
416
418
420
421
422
424
426
428
430

FIG. 4

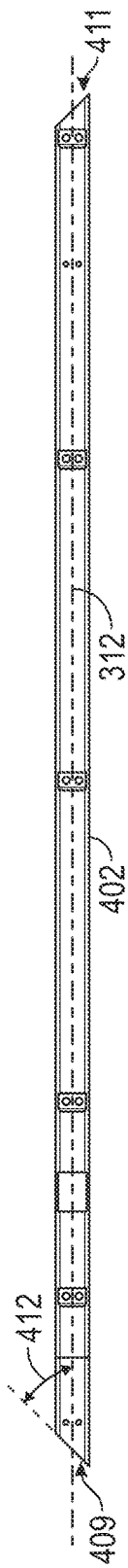

FIG. 5

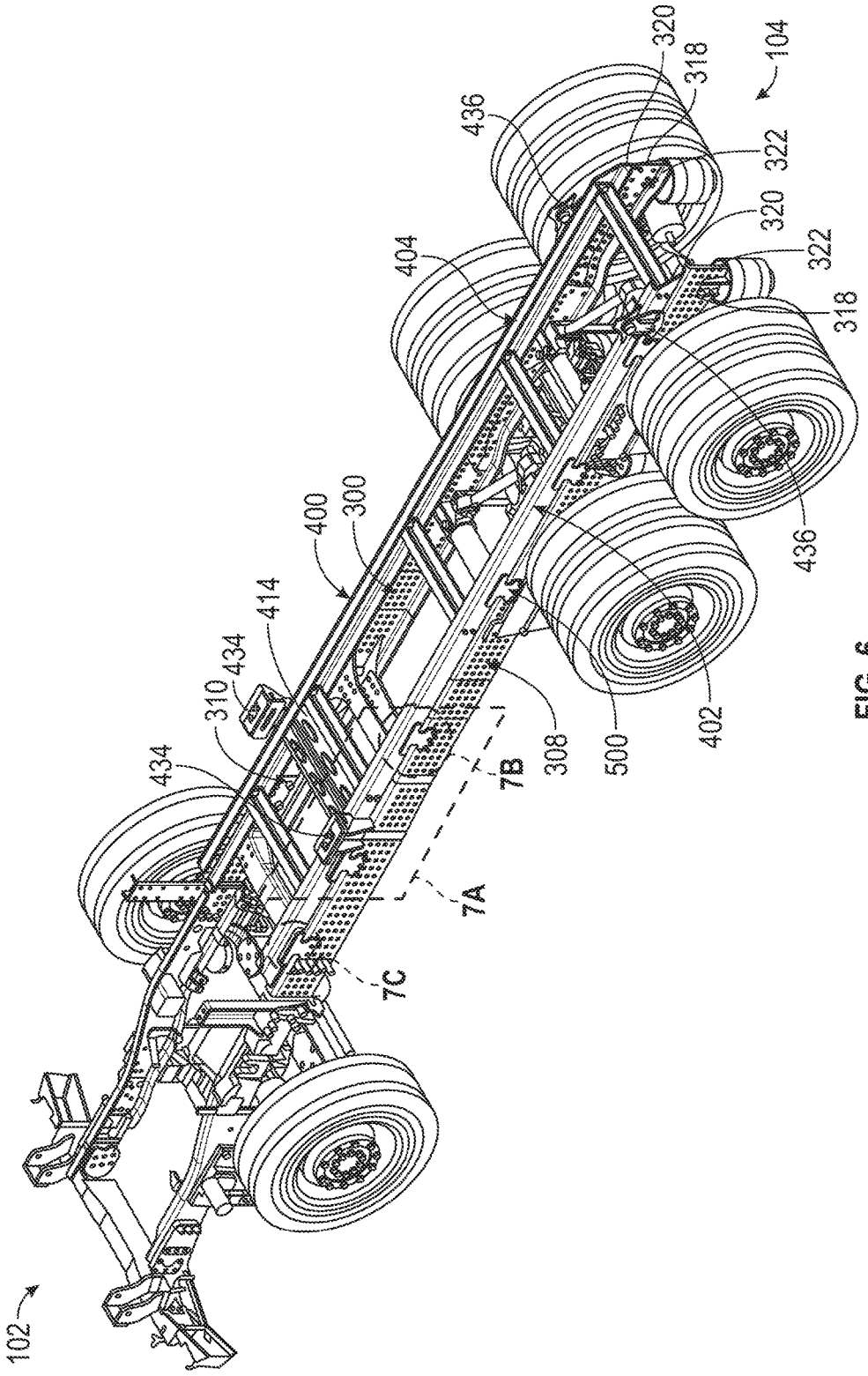
102
104
300
308
310
318
320
322
400
402
404
414
434
436
500
7A
7B
7C

FIG. 6

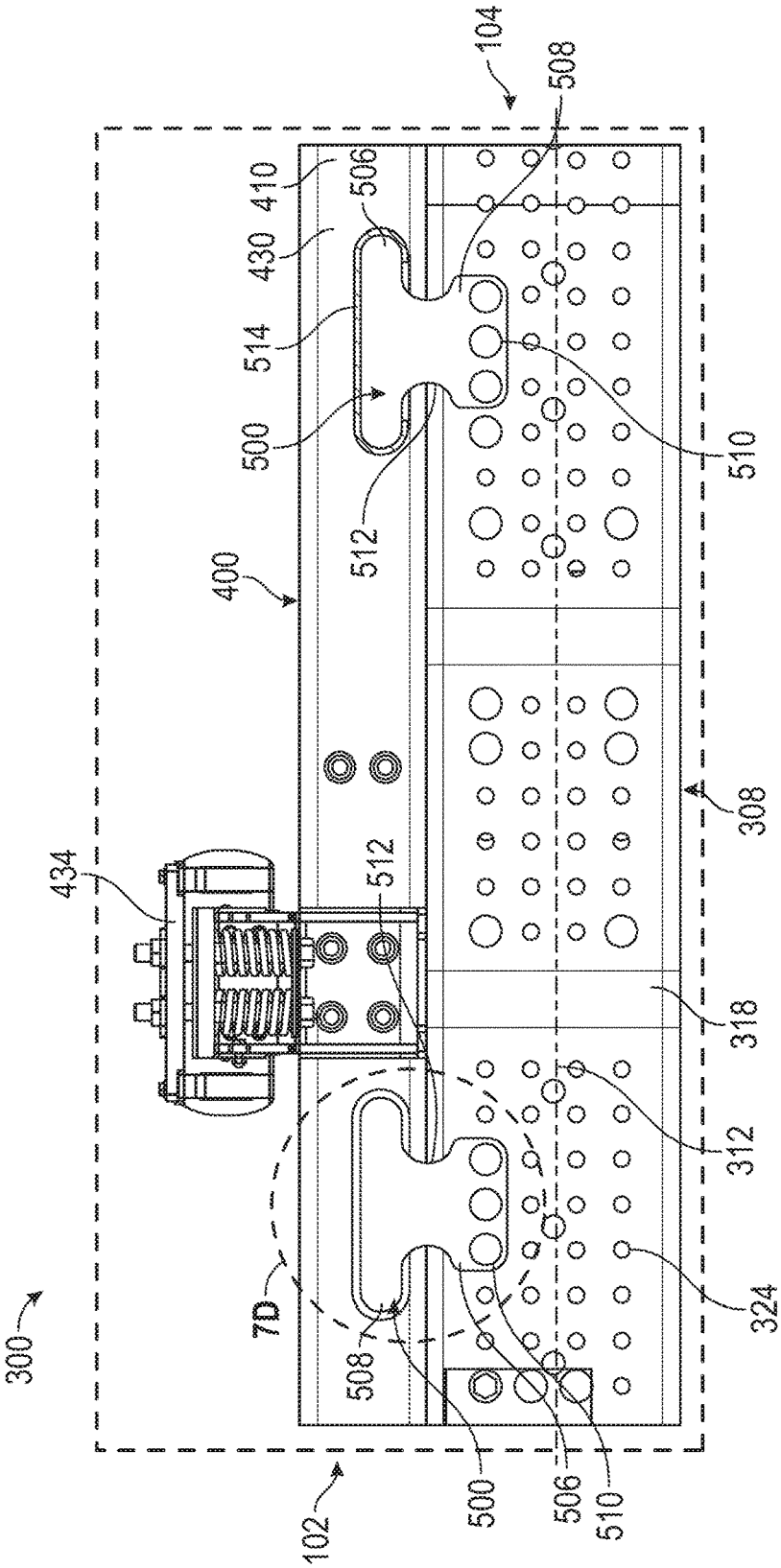
104
508
410
506
430
514
500
512
510
400
434
512
A
308
318
312
324
7D
300
508
500
506
510
102

FIG. 7A

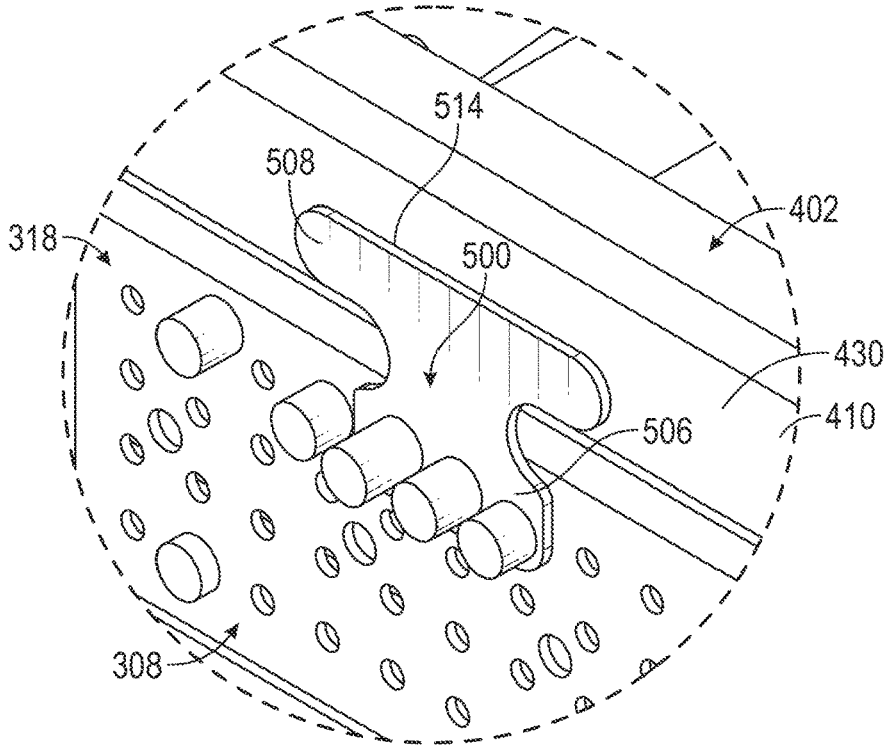
514
508
402
318
500
430
410
506
308

FIG. 7B

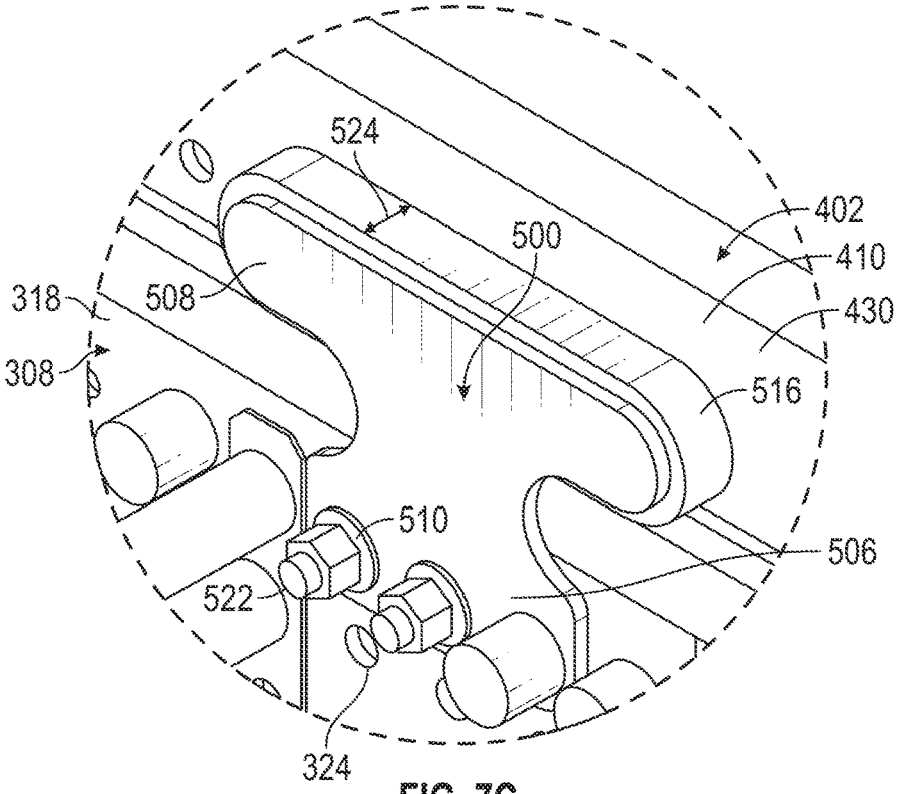
524
402
500
410
318
508
430
308
516
510
506
522
324

FIG. 7C

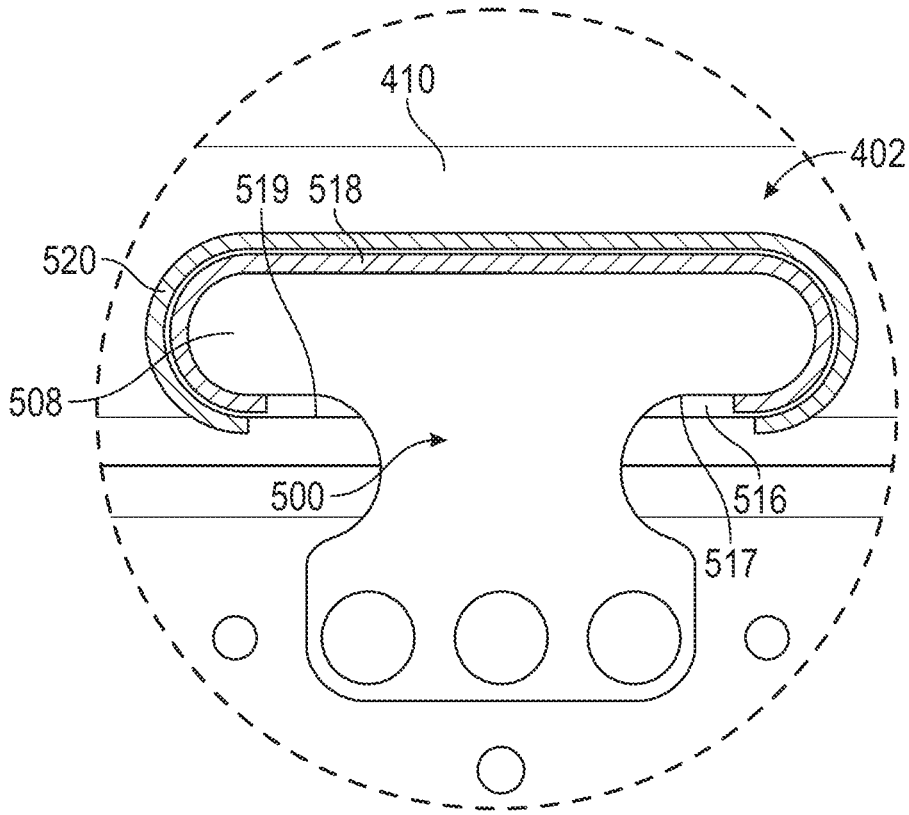

FIG. 7D

REFUSE BODY ADAPTER

CROSS-REFERENCE TO RELATED PATENT APPLICATIONS

[0001] The present application claims the benefit of U.S. Provisional Patent Application No. 62/661,482, filed Apr. 23, 2018, which is incorporated herein by reference in its entirety.

BACKGROUND

[0002] Cargo bodies may be manufactured separately from the vehicle chassis and are configured to pair with and mount to a single chassis design. These cargo bodies are not easily adapted for use with third-party chassis designs, which may not provide adequate support for the cargo body and may result in an incorrect positioning of the cargo body with respect to other vehicle components (e.g., a front cabin of the vehicle), or inadequate ground clearance.

SUMMARY

[0003] One embodiment relates to a refuse body adapter. The refuse body adapter includes a sub-frame assembly, a sub-frame adapter, and a spacer. The sub-frame assembly is configured to be coupled to a cargo body. The sub-frame adapter is configured to be coupled to a chassis of a vehicle. The spacer is coupled to both the sub-frame assembly and the sub-frame adapter. The spacer is disposed in a gap formed between the sub-frame assembly and the sub-frame adapter. A thickness of the spacer may be adjusted to accommodate different gap sizes between the sub-frame assembly and the sub-frame adapter.

[0004] Another embodiment relates to a refuse body adapter. The refuse body adapter includes a sub-frame assembly, a spacer, and a sub-frame adapter. The sub-frame assembly includes a first frame member and a second frame member oriented substantially parallel to the first frame member. The second frame member is spaced a first distance apart from the first frame member. The sub-frame assembly additionally includes a stringer having a first end that is coupled to the first frame member and a second end that is coupled to the second frame member. The spacer is coupled to the first frame member. The sub-frame adapter includes a first connecting region and a second connecting region. The first connecting region is configured to be coupled to one of the plurality of frame rails of a chassis of a vehicle. The second connecting region is coupled to the spacer. A thickness of the spacer may be adjusted to accommodate a gap formed between the first frame member and one of the plurality of frame rails.

[0005] Another embodiment relates to a vehicle. The vehicle includes a chassis, a sub-frame assembly, a spacer, and a sub-frame adapter. The sub-frame assembly includes a first frame member and a second frame member oriented substantially parallel to the first frame member. The second frame member is spaced apart from the first frame member. The sub-frame assembly additionally includes a stringer having a first end that is coupled to the first frame member and a second end that is coupled to the second frame member. The spacer is coupled to the first frame member. The sub-frame adapter includes a first connecting region and a second connecting region. The first connecting region is coupled to the first frame rail. The second connecting region is coupled to the spacer. A thickness of the spacer may be adjusted to accommodate a gap formed between the first frame member and the first frame rail.

[0006] This summary is illustrative only and is not intended to be in any way limiting. Other aspects, inventive features, and advantages of the devices and/or processes described herein, as defined solely by the claims, will become apparent in the detailed description set forth herein, taken in conjunction with the accompanying figures, wherein like reference numerals refer to like elements.

BRIEF DESCRIPTION OF THE DRAWINGS

[0007] The disclosure will become more fully understood from the following detailed description, taken in conjunction with the accompanying figures, wherein like reference numerals refer to like elements, in which:

[0008] FIG. **1** is a side view of a vehicle, according to an illustrative embodiment.

[0009] FIG. **2** is a perspective view of the vehicle of FIG. **1**, shown with a cargo body and a sub-frame assembly separated from the vehicle.

[0010] FIG. **3** is a perspective view of a sub-frame assembly, according to an illustrative embodiment.

[0011] FIG. **4** is an exploded view of FIG. **3**.

[0012] FIG. **5** is a side view of the sub-frame assembly of FIG. **3**.

[0013] FIG. **6** is a perspective view of a vehicle chassis, according to an illustrative embodiment.

[0014] FIG. **7**A is an enlarged side view of the vehicle chassis of FIG. **6**, in a region between a forward sub-frame adapter and a rear sub-frame adapter.

[0015] FIG. **7**B is a detailed view of a sub-frame adapter from the vehicle chassis of FIG. **6** located toward a front end of the vehicle.

[0016] FIG. **7**C is a detailed view of a sub-frame adapter from the vehicle chassis of FIG. **6** located toward a rear end of the vehicle.

[0017] FIG. **7**D is a side view of the sub-frame adapter of FIG. **7**C, showing the location of a weld joint.

DETAILED DESCRIPTION

[0018] Before turning to the figures, which illustrate the exemplary embodiments in detail, it should be understood that the present disclosure is not limited to the details or methodology set forth in the description or illustrated in the figures. It should also be understood that the terminology used herein is for the purpose of description only and should not be regarded as limiting.

[0019] According to an exemplary embodiment, an adapter facilitates mounting of a cargo body to a third-party designed chassis (e.g., a chassis not specifically designed to accommodate the cargo body). In particular, the adapter facilitates providing adequate structural support to the cargo body, while also facilitating the alignment of the cargo body with other vehicle components.

[0020] According to the exemplary embodiment shown in FIGS. **1** and **2**, a vehicle, shown as the vehicle **100**, is a refuse vehicle that is traditionally used to transport material from various waste receptacles within a municipality to a storage or processing facility (e.g., a landfill, an incineration facility, a recycling facility, etc.). The refuse vehicle includes a refuse body (e.g., cargo body **200**) that is used to collect material from multiple waste receptacles, reducing the number of trips required between the municipality and the

storage or processing facility. In the embodiment of FIGS. **1** and **2**, the refuse vehicle further includes a chassis **300**, a sub-frame assembly **400**, and a plurality of sub-frame adapters, shown as universal mounting brackets **500**.

[0021] FIG. **2** shows the refuse body (e.g., cargo body **200**) and the sub-frame assembly **400** separated from the remainder of the refuse vehicle **100**. As shown in FIG. **2**, the sub-frame assembly **400** is formed from a series of cross-bar elements that frame out a region of space in-between the refuse body and a structural frame **302** of the chassis **300**. In the embodiment of FIGS. **1** and **2**, the refuse body is configured to mount directly to the sub-frame assembly **400**, which is further adapted to mount to a third party vehicle chassis, such as the chassis **300** shown in FIGS. **1** and **2**. The sub-frame assembly **400** serves at least two important functions: 1) to stabilize the refuse body structurally with respect to the chassis **300**, and 2) to space the refuse body from the chassis **300** by an amount that provides adequate ground clearance for the refuse body and also provides clearance between the refuse body and rear wheels (e.g. wheel and tire assemblies **314**).

[0022] As shown in FIG. **1**, the sub-frame assembly **400** is coupled to the chassis **300** by a series of universal mounting brackets **500**, which are disposed along each side of the vehicle **100**. In the embodiment of FIG. **1**, an upper end (e.g., second connecting region **508**) of each universal mounting bracket **500** is coupled to an outside edge of the sub-frame assembly **400** while at the same time a lower end (e.g., first connecting region **506**) of each universal mounting bracket **500** is coupled to an outside edge of the chassis **300**. In the embodiment of FIG. **1**, the upper end of each universal mounting bracket **500** is permanently affixed (e.g., welded) to the sub-frame assembly **400**, while the lower end of each universal mounting bracket **500** is removably fastened to the chassis **300**, for example by using a series of bolts or rivets that extend through holes in the universal mounting bracket **500** and corresponding holes in the chassis **300**. The details of the general depictions provided in FIGS. **1** and **2** will be more fully explained by reference to FIGS. **3-7**D.

[0023] FIGS. **1** and **2** show an illustrative embodiment of a vehicle, shown as vehicle **100**. The vehicle **100** includes a chassis, shown as chassis **300**, that supports a first body portion, shown as front cabin **600**, and a second body portion, shown as cargo body **200**. As shown in FIGS. **1** and **2**, the front cabin **600** is disposed on a front end **102** of the vehicle **100**. The cargo body **200** is disposed behind the front cabin **600** toward a rear end **104** of the vehicle **100**. The chassis **300** engages a plurality of tractive assemblies, shown as rear tractive assemblies **304** and front tractive assemblies **306**. According to the illustrative embodiment of FIGS. **1** and **2**, the vehicle **100** is a refuse vehicle that is traditionally used to transport material from various waste receptacles within a municipality to a storage or processing facility (e.g., a landfill, an incineration facility, a recycling facility, etc.). However, the systems and methods of this disclosure are not limited to a single vehicle type. In an alternative embodiment, the vehicle **100** is another type of on-road truck such as a commercial truck with cargo carrier or a concrete mixer. Alternatively, the vehicle **100** is an off-road vehicle that includes a cargo body, such as vehicles used to transport fill and rocks for mining or construction.

[0024] According to the illustrative embodiment shown in FIG. **2**, the chassis **300** may be of any third-party design (e.g., a chassis **300** not designed specifically to accommodate the cargo body **200** shown in FIG. **2**). The chassis **300** includes frame rails, shown as a first frame rail **308** and a second frame rail **310**. The frame rails **308** and **310** extend from the front end **102** of the vehicle **100** to the rear end **104** of the vehicle **100** (e.g., front-to-back). In the embodiment shown in FIG. **2**, the first frame rail **308** is substantially parallel to the second frame rail **310** and is separated a distance apart from the first frame rail **308**. The frame rails **308** and **310** define a longitudinal axis **312**, which extends centrally between the frame rails **308** and **310**. As shown in FIG. **2**, the chassis **300** engages rear tractive assemblies **304** and front tractive assemblies **306**. In the embodiment of FIG. **2**, the chassis **300** engages a single front tractive assembly **306** and a pair of rear tractive assemblies **304**. In other embodiments there may be more or fewer of either the front tractive assemblies **306** or the rear tractive assemblies **304**. The front tractive assemblies **306** and the rear tractive assemblies **304** may include brakes (e.g., disc brakes, drum brakes, air brakes, etc.), gear reductions, steering components, wheel hubs, wheels, tires, and other features. As shown in FIGS. **1** and **2**, each of the front tractive assemblies **306** and the rear tractive assemblies **304** include tractive elements, shown as wheel and tire assemblies **314**. In other embodiments, at least one of the front tractive assemblies **306** and the rear tractive assemblies **304** include a different type of tractive element (e.g., a track, etc.).

[0025] According to the illustrative embodiment shown in FIGS. **1** and **2**, the front cabin **600** includes one or more doors, shown as doors **602** that facilitate entering and exiting an interior of the front cabin **600**. The interior of the front cabin **600** may include a plurality of seats (e.g., two, three, four, five, etc.), vehicle controls, driving components (e.g., steering wheel, accelerator pedal, brake pedal, etc.), etc. In the embodiment shown in FIG. **2**, the cargo body **200** includes a refuse body and a compaction mechanism that is used to maximize the amount of refuse that can be transported in the refuse body. The refuse body includes a large chamber within which material from multiple residential or commercial waste receptacles is stored. In other embodiments, the cargo body **200** includes a truck bed or a flat bed. In yet other embodiments, the cargo body **200** additionally or alternatively includes a boom lift.

[0026] According to an illustrative embodiment, the vehicle **100** includes a powertrain system. The powertrain system may include a primary driver (e.g., an engine, a motor, etc.), an energy generation device (e.g., a generator, etc.), and/or an energy storage device (e.g., a battery, capacitors, ultra-capacitors, etc.) electrically coupled to the energy generation device. The primary driver may receive fuel (e.g., gasoline, diesel, etc.) from a fuel tank and combust the fuel to generate mechanical energy. A transmission may receive the mechanical energy and provide an output to the generator. The generator may be configured to convert mechanical energy into electrical energy that may be stored by the energy storage device. The energy storage device may provide electrical energy to a motive driver to drive at least one of the front tractive assemblies **306** and the rear tractive assemblies **304**. In some embodiments, each of the front tractive assemblies **306** and/or the rear tractive assemblies **304** include an individual motive driver (e.g., a motor that is electrically coupled to the energy storage device, etc.) configured to facilitate independently driving each of the wheel and tire assemblies **314**. In some embodiments, a transmis-

sion of the vehicle **100** is rotationally coupled to the primary driver, a transfer case assembly, and one or more drive shafts. The one or more drive shafts may be received by one or more differentials configured to convey the rotational energy of the drive shaft to a final drive (e.g., half-shafts coupled to the wheel and tire assemblies **314**, etc.). The final drive may then propel or moves the vehicle **100**. In such embodiments, the vehicle **100** may not include the generator and/or the energy storage device. The powertrain of the vehicle **100** may thereby be a hybrid powertrain or a non-hybrid powertrain. According to an illustrative embodiment, the primary driver is a compression-ignition internal combustion engine that utilizes diesel fuel. In other embodiments, the primary driver is another type of device (e.g., spark-ignition engine, fuel cell, electric motor, etc.) that is otherwise powered (e.g., with gasoline, compressed natural gas, hydrogen, electricity, etc.).

[0027] FIG. **2** shows an illustrative embodiment of a sub-frame assembly **400** that is configured to facilitate mounting of the cargo body **200** to the chassis **300**. As shown in FIG. **2**, the sub-frame assembly **400** is configured to be disposed on the chassis **300** and extends between the front cabin **600** and a rear end **104** of the vehicle **100**. Specifically, the sub-frame assembly **400** is configured to be disposed on an upper surface **316** of the frame rails **308** and **310**. As shown in FIG. **2**, the cargo body **200** is configured to be at least partially disposed atop the sub-frame assembly **400**, such that the sub-frame assembly **400** is sandwiched between the cargo body **200** and the chassis **300**.

[0028] FIG. **3** shows the embodiment of the sub-frame assembly **400** from FIG. **2** isolated from the vehicle **100**. As shown in FIG. **3**, the sub-frame assembly **400** includes a pair of frame members, shown as a first frame member **402** and a second frame member **404**. The first frame member **402** is oriented in a direction that is substantially parallel to the second frame member **404** and is spaced a distance apart from the second frame member **404**. In the embodiment shown in FIG. **3**, the distance between the first frame member **402** and the second frame member **404** is approximately the same as the distance between the first frame rail **308** and the second frame rail **310** (see also FIG. **2**) such that the first frame member **402** is approximately centered atop the first frame rail **308** and the second frame member **404** is approximately centered atop the second frame rail **310**. Alternatively, the spacing may be different. The sub-frame assembly **400** also includes a plurality of support elements, shown as stringers **406** that couple the first frame member **402** to the second frame member **404**.

[0029] FIG. **4** shows the sub-frame assembly **400** of FIG. **3** in an exploded view. According to an illustrative embodiment, each of the first frame member **402** and the second frame member **404** is formed from a single piece of material. Alternatively, the frame members **402** and **404** may be formed from multiple pieces of material that are welded or fastened together. As shown in FIG. **4**, each of the first frame member **402** and the second frame member **404** is formed as a C-shaped element having two horizontal legs **408** and a vertical leg **410**. The horizontal legs **408** are oriented in a direction that is substantially perpendicular to the vertical leg **410**. The horizontal legs **408** extend from the vertical leg **410** toward the longitudinal axis **312** and define a channel within which each of the stringers **406** are received.

[0030] A side view of the embodiment of the sub-frame assembly **400** of FIG. **3** is shown in FIG. **5**. As shown in FIG. **5**, each of the first frame member **402** and the second frame member **404** (shown in FIG. **4**) includes a forward edge **409** and a rear edge **411** opposite the forward edge **409**. In the embodiment shown in FIG. **5**, each of the forward edge **409** and the rear edge **411** are chamfered (e.g. by cutting the frame members **402** and **404** during the manufacturing process) such that they form an angle **412** with respect to the longitudinal axis **312**. Among other benefits, the angle **412** accommodates the shape of the cargo body **200** (e.g., the section of the cargo body **200** that extends below the chassis **300** on the rear end **104** of the vehicle **100** as shown in FIG. **1**). Using angled or chamfered edges also eliminates sharp points on the vehicle **100** that would otherwise be prone to cutting or snagging. In the embodiment shown in FIG. **5**, the angle **412** formed between the forward edge **409** and the longitudinal axis **312** is the same as the angle formed between the rear edge **411** and the longitudinal axis **312**, and is equal to approximately 45° . In other embodiments, any other suitable angle may be utilized.

[0031] Returning to FIG. **4**, a plurality of stringers **406** are shown between the first frame member **402** and the second frame member **404**. Five stringers **406** are shown in FIG. **4**, although the required number of stringers **406** may be different in other embodiments depending on structural requirements in different applications and vehicle types. As shown in FIG. **4**, each stringer **406** is oriented in a direction that is substantially perpendicular to the longitudinal axis **312**. In other embodiments, the stringers may be angled with respect to the longitudinal axis **312** (e.g., the cross bracing for the sub-frame assembly **400** may be formed using two diagonal stringers in an X-shaped manner, or any other suitably strong arrangement of stringers **406**). The stringers **406** are spaced along the length of the frame members **402** and **404** and couple the frame members **402** and **404** together. In the embodiment of FIG. **4**, three stringers **406** are spaced approximately an equal distance from one another starting proximate to the rear edge **411** of the frame members **402** and **404**. A final stringer **406** is located proximate the forward edge **409** of the frame members **402** and **404**. In an alternative embodiment, all of the stringers **406** may be spaced at regular intervals (e.g., with similar spacing between adjacent stringers **406**) along the length of the frame members **402** and **404** or at any other location that provides adequate structural support for the cargo body **200** (shown in FIGS. **1** and **2**).

[0032] Other structural members and elements may also be included between the frame members **402** and **404**. For example, in the embodiment shown in FIG. **4** (e.g., a refuse truck application), a support structure **414** is provided in between two stringers **406** towards the forward edge **409** of each of the frame members **402** and **404**. The support structure **414** is disposed proximate to a contact point between the cargo body **200** and the sub-frame assembly **400** and provides additional structural support to the sub-frame assembly **400** during unload events of the refuse truck as will be further described.

[0033] As shown in FIG. **4**, each stringer **406** is formed as a single piece of material (e.g., manufactured using a sheet metal stamping and forming process with welded corners). Alternatively, each stringer **406** may be formed from separate pieces of material that are welded or otherwise fastened together. Each stringer **406** includes an upper wall **416**, a lower wall **418**, a first end, shown as first end wall **420**, and a second end, shown as second end wall **421**. Together, the

upper wall **416**, lower wall **418**, first end wall **420** and second end wall **421** form a recessed area **422**. As shown in FIG. **4**, each of the first end wall **420** and the second end wall **421** of each stringer **406** includes a plurality of stringer holes, shown as holes **424** that are alignable with (e.g., such that they share a common axis with) mating holes in one of the first frame member **402** and the second frame member **404**, shown as holes **426**.

[0034] In the embodiment of FIG. **4**, the first end wall **420** and the second end wall **421** are received within the C-shaped channel of either the first frame member **402** or the second frame member **404**. As shown in FIG. **4**, a plurality of fasteners are received within the holes **424** and **426** to couple each stringer **406** to both the first frame member **402** and the second frame member **404**. In the embodiment of FIG. **4**, the fasteners take the form of a bolt **428** that is inserted from an outer face **430** of each frame member **402** and **404**. Each of the bolts **428** passes through the frame members **402** and **404** and one of the first end wall **420** and the second end wall **421** toward the longitudinal axis **312**. A nut **432** is inserted into the recessed area **422** of each stringer **406** to secure each bolt **428** in place and prevent movement of the stringers **406** with respect to the first and second frame members **402** and **404**.

[0035] FIG. **6** shows an illustrative embodiment of the chassis **300** coupled to the sub-frame assembly **400**. As shown in FIG. **6**, each of the first frame rail **308** and the second frame rail **310** are formed in a C-shape defined by a vertical portion **318**, an upper leg **320**, and a lower leg **322**. The upper leg **320** and lower leg **322** are substantially parallel to one another and substantially perpendicular to the vertical portion **318**. The sub-frame assembly **400** is configured to be disposed on the chassis **300**; for example, such that one of the horizontal legs **408** of the first frame member **402** contacts the upper leg **320** of the first frame rail **308**, while at the same time one of the horizontal legs **408** of the second frame member **404** contacts the upper leg **320** of the second frame rail **310**.

[0036] As shown in FIG. **6**, the sub-frame assembly **400** is coupled (e.g., mounted) to the chassis **300** using a plurality of sub-frame adapters, shown as universal mounting brackets **500**. In the embodiment of FIG. **6**, the universal mounting brackets **500** are positioned along the length of the chassis **300**. The four universal mounting brackets **500** toward the rear end **104** of the vehicle **100** are spaced approximately an equal distance from one another, while in comparison, the two universal mounting brackets **500** nearest the front end **102** of the vehicle **100** are spaced much more closely to one another. Alternatively, the spacing between each of the universal mounting brackets **500** may be different. In the embodiment shown in FIG. **6**, the arrangement of universal mounting brackets **500** that couple the second frame member **404** to the second frame rail **310** is identical to the arrangement of universal mounting brackets **500** that couple the first frame member **402** to the first frame rail **308**.

[0037] As shown in FIG. **6**, in an illustrative embodiment the vehicle **100** (e.g., a refuse truck) includes a cargo body contact point, shown as contact pads **434** and a pivot connector, shown as flanges **436**, both of which are disposed on the sub-frame assembly **400**. Returning to FIG. **1**, the flanges **436** are coupled to the sub-frame assembly **400** toward the rear end **104** of the vehicle **100** (e.g., using bolts, screws, or any other suitable fastener), whereas the contact pads **434** are coupled to the sub-frame assembly **400** toward the forward edge **409** of the sub-frame assembly **400** (e.g., using screws, bolts, or any other suitable fastener). The cargo body **200** is pivotably mounted to the flanges **436**, allowing the cargo body **200** to tilt with respect to the chassis **300** between a loading position, where the cargo body **200** is proximate to the contact pads **434**, and an unloading position, where the cargo body **200** is spaced a distance away from the contact pads **434**. To unload waste material from the cargo body **200**, the cargo body **200** pivots away from the contact pads **434**, emptying its contents from the rear end **104** of the vehicle **100**. Once the contents of the cargo body **200** are unloaded, the cargo body **200** returns toward the contact pads **434** and in certain scenarios may forcibly engage with the contact pads **434**. Accordingly, a support structure **414** is coupled to the sub-frame assembly **400** proximate to the contact pads **434** to protect the structure against damage caused by repeated engagement of the contact pads **434** with the cargo body **200**.

[0038] FIG. **7**A shows an enlarged side view of the chassis **300** of FIG. **6** in the region of the contact pads **434**. As shown in FIG. **7**A, the first frame rail **308** includes a plurality of mounting holes, shown as holes **324** that pass through the vertical portion **318** of the first frame rail **308**. The holes **324** are arranged in a rectangular pattern such that adjacent holes are aligned in both a horizontal direction and a vertical direction. In other embodiments, the alignment or spacing of holes **324** may be different. The arrangement of holes **324** in the first frame rail **308** is identical to the arrangement of holes in the second frame rail **310** (e.g. the arrangement of features described on the side of the vehicle **100** shown in FIGS. **7**A-**7**D apply equally to arrangement and design of features on the opposite side of the vehicle **100**). As shown in the embodiment of FIG. **7**A, the sub-frame assembly **400** is coupled to the chassis **300** using a plurality of universal mounting brackets **500**. As shown in FIG. **7**A, the universal mounting brackets **500** toward the front end **102** of the vehicle **100** (also see FIG. **6**) are the same as the universal mounting brackets **500** used toward the rear end **104** of the vehicle **100** (see also FIG. **6**). Alternatively, the design of the universal mounting brackets **500** may be different.

[0039] In the embodiment of FIG. **7**A, each of the universal mounting brackets **500** is made from a single piece of material (e.g., a piece of sheet metal formed by a metal cutting or stamping process, or any other suitably strong material). Alternatively, the universal mounting brackets may be formed from multiple pieces of material welded or otherwise fastened together. Each universal mounting bracket **500** includes a first connecting region **506** and a second connecting region **508** opposite the first connecting region **506**. In the embodiment shown in FIG. **7**A, the first connecting region **506** is rectangular in shape with curved corners. The first connecting region **506** includes a plurality of through-holes, shown as holes **510**. Each one of the plurality of holes **510** is alignable with a corresponding one of the plurality of mounting holes **324** in the first frame rail **308**. In other words, the pattern of holes **510** in the first connecting region **506** is arranged to match with a pattern of mounting holes **324** in the first frame rail **308**. In the embodiment shown in FIG. **7**A, the holes **510** disposed in the first connecting region **506** are arranged to align with a set of horizontally aligned mounting holes **324** from the pattern of mounting holes **324** in the first frame rail **308**. In

alternative embodiments, the number or arrangement of holes in the first connecting region **506** may be different. For example, the first connecting region **506** may be resized to include any number of holes **510** (e.g., in any desired pattern), each hole **510** aligning with a different (e.g., a corresponding one) mounting hole **324** in the first frame rail **308**.

[0040] In the illustrative embodiment of FIG. **7**A, the second connecting region **508** is shaped as a rectangle with two rounded ends disposed on opposite ends of the second connecting region (e.g., a racetrack or lozenge shape). This particular shape provides greater coverage of the first frame member **402** in a longitudinal direction, parallel to the longitudinal axis **312**. In other words, a length of the second connecting region **508** in a longitudinal direction is greater than a length of the first connecting region **506** in a longitudinal direction. Various alternative shapes are contemplated; for example, the second connecting region **508** may be elliptical or rectangular with rounded corners or any other suitable shape. In the embodiment shown in FIG. **7**A, the first connecting region **506** transitions to the second connecting region **508** along edges **512** having a constant radius of curvature, an arrangement that reduces stress on the universal mounting brackets **500** during normal vehicle operations. Again, various alternatives are contemplated, although generally the edges **512** will be shaped to reduce stress on the universal mounting bracket **500** in the region in between the first connecting region **506** and the second connecting region **508**, while minimizing the mass of the universal mounting bracket **500**.

[0041] A detailed view of the universal mounting bracket **500** located rearward (closer to the rear end **104** of the vehicle **100**) of the contact pad **434** from FIGS. **6** and **7**A is shown in FIG. **7**B, while a detailed view of the universal mounting bracket **500** located forward (closer to the front end **102** of the vehicle **100**) of the contact pad **434** from FIGS. **6** and **7**A is shown in FIG. **7**C. As shown in the embodiments of FIGS. **7**A and **7**B, the first connecting region **506** is removably coupled to the first frame rail **308** using a plurality of bolts **522**. In alternative embodiments, the first connecting region **506** may be fastened to the first frame rail **308** using rivets or any other suitable fastener. As shown in FIG. **7**C, each of the bolts **522** is inserted through one of the mounting holes **324** and through a corresponding one of the holes **510** in the first connecting region **506**.

[0042] In the embodiment shown in FIG. **7**B, the second connecting region **508** for each of the universal mounting brackets **500** is configured to be permanently coupled to the sub-frame assembly **400**. The second connecting region may be secured to the first frame member **402** using a welding process; for example, by welding along a joint **514** formed between the second connecting region **508** and the vertical leg **410** of the first frame member **402** (the joint **514** that follows along the perimeter of the second connecting region **508** as shown in FIG. **7**A). In particular, this approach may be used in embodiments where the outer face **430** of the vertical leg **410** of the first frame member **402** is approximately flush with the outermost face of the vertical portion **318** of the first frame rail **308** (e.g., such that the outer face **430** of the vertical leg **410** of the first frame member **402** lies along a plane passing through the outermost face of the vertical portion **318** of the first frame rail **308**).

[0043] In other embodiments or different longitudinal positions along the chassis **300**, the vertical leg **410** of the first frame member **402** may be spaced a distance away from the vertical portion **318** of the first frame rail **308**, which may occur, for example, when the spacing between the first frame rail **308** and the second frame rail **310** (see FIG. **6**) is greater than the spacing between the first frame member **402** and the second frame member **404**. As shown in FIG. **7**C, a spacer, shown as standoff **516** may be included between the second connecting region **508** and the vertical leg **410** of the first frame member **402** to accommodate this gap. The thickness of the standoff **516** (e.g., in a direction extending outward from the outer face **430** of the vertical leg **410** of the first frame member **402**) may be modified as needed to suit a wide range of different third-party vehicle chassis designs. For example, in the embodiment of FIG. **7**C, a first distance between an outer lateral surface of the first frame rail **308** and the second frame rail **310** may be greater than a second distance between an outer lateral surface of the first frame member **402** and the second frame member **404**. A thickness **524** of the standoff **516** may be sized to occupy a gap formed between the frame rails **308**, **310** and the frame members **404**. For example, the thickness **524** may be approximately equal to half of a difference between the first distance and the second distance. A second standoff, of approximately equal thickness to the first standoff may be provided on a second one of the frame members **404** in order to center the sub-frame assembly **400** with respect to the vehicle **100** (e.g., frame rails **308**, **310**). According to an exemplary embodiment, the standoff **516** has approximately the same shape as at least a portion of the second connecting region **508** of the universal mounting bracket **500**.

[0044] As shown in FIG. **7**D, the second connecting region **508** of the universal mounting bracket **500** may by welded to the standoff **516** along a first perimeter joint **518** formed between the second connecting region **508** and the standoff **516** (e.g., an outer perimeter **517** of the second connecting region), while the standoff **516** may be welded to the vertical leg **410** of the first frame member **402** along a second perimeter joint **520** formed between the standoff **516** and the vertical leg **410** of the first frame member **402** (e.g., an outer perimeter **519** of the standoff **516**).

[0045] The components of the vehicle **100** (see FIG. **1**) in the foregoing description may be assembled in any order or concurrently in a vehicle manufacturing process. For example, according to the illustrative embodiment shown in FIG. **1**, a method of manufacture includes the steps of aligning one of the through-holes, shown as holes **510** with one of the mounting holes **324** on one of the first frame rail **308** and second frame rail **310** (see also FIG. **2**), inserting a fastener through the aligned holes **510** and mounting holes **324**, placing the sub-frame assembly **400** on an upper surface **316** (shown in FIG. **2**) of the first frame rail **308** and the second frame rail **310**, and welding the second connecting region **508** to one of the first frame member **402** and the second frame member **404** (shown in FIG. **2**).

[0046] As utilized herein, the terms "approximately," "about," "substantially", and similar terms are intended to have a broad meaning in harmony with the common and accepted usage by those of ordinary skill in the art to which the subject matter of this disclosure pertains. It should be understood by those of skill in the art who review this disclosure that these terms are intended to allow a description of certain features described and claimed without restricting the scope of these features to the precise numerical ranges provided. Accordingly, these terms should be

interpreted as indicating that insubstantial or inconsequential modifications or alterations of the subject matter described and claimed are considered to be within the scope of the disclosure as recited in the appended claims.

[0047] It should be noted that the terms "exemplary" and "example" as used herein to describe various embodiments is intended to indicate that such embodiments are possible examples, representations, and/or illustrations of possible embodiments (and such term is not intended to connote that such embodiments are necessarily extraordinary or superlative examples).

[0048] The terms "coupled," "connected," and the like, as used herein, mean the joining of two members directly or indirectly to one another. Such joining may be stationary (e.g., permanent, etc.) or moveable (e.g., removable, releasable, etc.). Such joining may be achieved with the two members or the two members and any additional intermediate members being integrally formed as a single unitary body with one another or with the two members or the two members and any additional intermediate members being attached to one another.

[0049] The term "or," as used herein, is used in its inclusive sense (and not in its exclusive sense) so that when used to connect a list of elements, the term "or" means one, some, or all of the elements in the list. Conjunctive language such as the phrase "at least one of X, Y, and Z," unless specifically stated otherwise, is understood to convey that an element may be either X, Y, Z; X and Y; X and Z; Y and Z; or X, Y, and Z (i.e., any combination of X, Y, and Z). Thus, such conjunctive language is not generally intended to imply that certain embodiments require at least one of X, at least one of Y, and at least one of Z to each be present, unless otherwise indicated.

[0050] References herein to the positions of elements (e.g., "top," "bottom," "above," "below," etc.) are merely used to describe the orientation of various elements in the FIGURES. It should be noted that the orientation of various elements may differ according to other exemplary embodiments, and that such variations are intended to be encompassed by the present disclosure.

[0051] It is important to note that the construction and arrangement of the systems as shown in the exemplary embodiments is illustrative only. Although only a few embodiments of the present disclosure have been described in detail, those skilled in the art who review this disclosure will readily appreciate that many modifications are possible (e.g., variations in sizes, dimensions, structures, shapes and proportions of the various elements, values of parameters, mounting arrangements, use of materials, colors, orientations, etc.) without materially departing from the novel teachings and advantages of the subject matter recited. For example, elements shown as integrally formed may be constructed of multiple parts or elements. It should be noted that the elements and/or assemblies of the components described herein may be constructed from any of a wide variety of materials that provide sufficient strength or durability, in any of a wide variety of colors, textures, and combinations. Accordingly, all such modifications are intended to be included within the scope of the present inventions. Other substitutions, modifications, changes, and omissions may be made in the design, operating conditions, and arrangement of the preferred and other exemplary embodiments without departing from scope of the present disclosure or from the spirit of the appended claims.

1. A refuse body adapter, comprising:

a sub-frame assembly configured to be coupled to a cargo body;

a sub-frame adapter configured to be coupled to a chassis of a vehicle; and

a spacer coupled to both the sub-frame assembly and the sub-frame adapter, wherein the spacer is disposed in a gap formed between the sub-frame assembly and the sub-frame adapter,

wherein a thickness of the spacer may be adjusted to accommodate different gap sizes between the sub-frame assembly and the sub-frame adapter.

2. The refuse body adapter of claim **1**, wherein the vehicle is a refuse vehicle, and wherein the refuse body adapter is configured to couple a refuse body to the chassis.

3. The refuse body adapter of claim **1**, wherein the chassis comprises a first frame rail and a second frame rail spaced a distance from the first frame rail, and wherein the thickness of the spacer may be adjusted to accommodate different values of the distance between the first frame rail and the second frame rail.

4. The refuse body adapter of claim **1**, wherein the sub-frame adapter comprises a first connecting region and a second connecting region, wherein the first connecting region is configured to be coupled to the chassis, and wherein the second connecting region is coupled to the spacer.

5. The refuse body adapter of claim **4**, wherein a cross-sectional shape of the spacer is approximately the same as a cross-sectional shape of the second connecting region.

6. The refuse body adapter of claim **5**, wherein the cross-sectional shape of the second connecting region is rectangular with rounded ends that are disposed on opposing ends of the second connecting region.

7. The refuse body adapter of claim **4**, wherein the second connecting region is welded to the spacer along a perimeter of the second connecting region, and wherein the spacer is welded to the sub-frame assembly along a perimeter of the spacer.

8. The refuse body adapter of claim **4**, wherein a length of the second connecting region in a longitudinal direction is greater than a length of the first connecting region in a longitudinal direction.

9. A refuse body adapter, comprising:

a sub-frame assembly, the sub-frame assembly comprising:

a first frame member;

a second frame member substantially parallel to the first frame member and spaced a first distance apart from the first frame member; and

a stringer having a first end and a second end, wherein the first end is coupled to the first frame member and the second end is coupled to the second frame member;

a spacer coupled to the first frame member; and

a sub-frame adapter having a first connecting region and a second connecting region, wherein the first connecting region is configured to be coupled to one of a plurality of frame rails of a chassis of a vehicle, wherein the second connecting region is coupled to the spacer, and wherein a thickness of the spacer may be adjusted to accommodate a gap formed between the first frame member and one of the plurality of frame rails.

10. The refuse body adapter of claim **9**, wherein the thickness of the spacer is adjusted to accommodate approximately half of a difference between the first distance and a second distance between the plurality of frame rails.

11. The refuse body adapter of claim **9**, wherein the vehicle is a refuse vehicle, and wherein the refuse body adapter is configured to couple a refuse body to the chassis.

12. The refuse body adapter of claim **9**, wherein a cross-sectional shape of the spacer is approximately the same as a cross-sectional shape of the second connecting region.

13. The refuse body adapter of claim **9**, wherein the second connecting region is welded to the spacer along a perimeter of the second connecting region, and wherein the spacer is welded to one of the first frame member and the second frame member along a perimeter of the spacer.

14. The refuse body adapter of claim **9**, wherein a length of the second connecting region in a longitudinal direction is greater than a length of the first connecting region in a longitudinal direction.

15. A vehicle comprising:

a chassis having a first frame rail and a second frame rail, wherein the first frame rail is substantially parallel to the second frame rail and spaced apart from the first frame rail;

a sub-frame assembly, the sub-frame assembly comprising:

a first frame member;

a second frame member substantially parallel to the first frame member and spaced apart from the first frame member; and

a stringer having a first end and a second end, wherein the first end is coupled to the first frame member and the second end is coupled to the second frame member;

a spacer coupled to the first frame member; and

a sub-frame adapter having a first connecting region and a second connecting region, wherein the first connecting region is coupled to the first frame rail, wherein the second connecting region is coupled to the spacer, and wherein a thickness of the spacer may be adjusted to accommodate a gap formed between the first frame member and the first frame rail.

16. The vehicle of claim **15**, wherein the second frame member is spaced a first distance apart from the first frame member, wherein the second frame rail is spaced a second distance apart from the first frame rail, and wherein the thickness of the spacer is adjusted to accommodate approximately half of a difference between the first distance and the second distance.

17. The vehicle of claim **15**, wherein the vehicle is a refuse vehicle, and wherein together the sub-frame assembly, the spacer, and the sub-frame adapter are configured to couple a refuse body to the chassis.

18. The vehicle of claim **15**, wherein a cross-sectional shape of the spacer is approximately the same as a cross-sectional shape of the second connecting region.

19. The vehicle of claim **15**, wherein the second connecting region is welded to the spacer along a perimeter of the second connecting region, and wherein the spacer is welded to one of the first frame member and the second frame member along a perimeter of the spacer.

20. The vehicle of claim **15**, wherein a length of the second connecting region in a longitudinal direction is greater than a length of the first connecting region in a longitudinal direction.

* * * * *