J. F. GAFFNEY.

ELECTRIC RELAY.

APPLICATION FILED MAY 24, 1915.

1,169,251. Patented Jan. 25, 1916.

FIG. 1

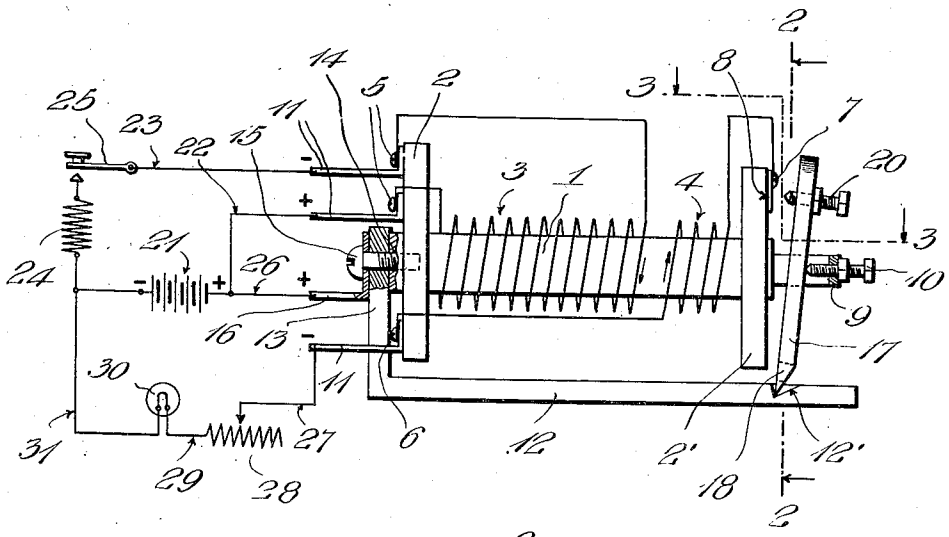

FIG. 2

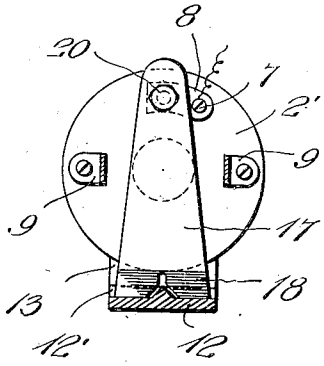

FIG. 3

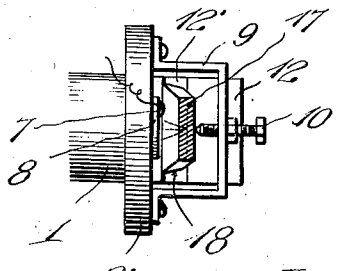

Witnesses

H. Woodard

Inventor

James F. Gaffney

By H. B. Williamson

Attorneys

UNITED STATES PATENT OFFICE.

JAMES F. GAFFNEY, OF STEELTON, PENNSYLVANIA.

ELECTRIC RELAY.

1,169,251. Specification of Letters Patent. Patented Jan. 25, 1916.

Application filed May 24, 1915. Serial No. 30,088.

To all whom it may concern:

Be it known that I, JAMES F. GAFFNEY, a citizen of the United States, residing at Steelton, in the county of Dauphin and State of Pennsylvania, have invented certain new and useful Improvements in Electric Relays; and I do declare the following to be a full, clear, and exact description of the invention, such as will enable other skilled in the art to which it appertains to make and use the same.

This invention while relating generally to relays, appertains more specifically to such of the latter as are used in connection with systems of telephony and known to the art as line relays.

One object of this invention is to provide a relay of the character designated which will cause the external circuit to be opened simultaneously with the opening of the line circuit.

Another and further object of the invention is to provide in connection with the line relay, a neutralizing coil for overcoming residual magnetism, the coil being so arranged as not to in any way detract electrical energy from the line circuit.

Another and still further object of this invention is to provide a simple and efficient means wherein "sticking of the armature" is prevented.

Another and further object is to provide a line relay which is simple in construction, and efficient in operation, as well as one that will prevent the control or external circuit remaining closed after opening of the line circuit.

With these and other objects in view, my invention consists of certain novel details of construction and the combination and arrangement of parts as will be hereinafter more particularly set forth and claimed.

Referring more particularly to the accompanying drawings in which corresponding parts are indicated by similar reference characters: Figure 1 is a diagrammatic illustration of my improved relay and circuit connections therefor; Fig. 2 is a transverse section taken on the line 2—2 of Fig. 1; and Fig. 3 is a horizontal section taken on the line 3—3 of Fig. 1.

It is a fact well known to those acquainted with the art under discussion, that owing to residual magnetism, the armature frequently maintains the control circuit in a closed condition after opening of the line circuit. Various efforts have been made to overcome this inherent defect by providing a neutralizing coil arranged in the line circuit; this coil however, has proved disadvantageous in that it detracts and unnecessarily consumes the electrical energy of the line circuit and it is to the end that a means may be provided which while serving to act as a neutralizing agent for the residual magnetism, will not prove a drain on the line batteries to thereby shorten the life thereof.

In its present illustrated embodiment, my invention consists of a magnetizable core 1 having fixedly secured to the extremity thereof, the annular heads 2 and 2′ of insulating material. A helix 3 disposed upon core 1 performs the functions of the working coil of the relay and when energized, magnetizes core 1 as will be readily understood without further description. Although the winding or helix 3 may have any number of turns, the latter being governed entirely by the size of the relay, nevertheless, it is found that a winding of 1,400 convolutions and a resistance of 12 ohms is extremely effective for the standard line relay. As the helix 3 is the working winding of the relay, it will hereinafter, for the sake of convenience, be designated as the line helix. Also situated upon core 1 is an auxiliary helix or winding 4. This helix 4 has preferably 130 convolutions and a resistance of one-half an ohm. As helix or coil 4 acts as a neutralizing agent, owing to its inverse winding, it will for the sake of convenience, hereinafter be referred to as the neutralizing coil. This neutralizing helix 4 which is wound upon core 1 in a direction inverse to the winding 3, may be superimposed on one end of the winding 3, or it may be placed directly upon the core as shown in Fig. 1 of the drawings.

Binding screws 5 disposed in spaced relation upon head 2 of the relay and extending transversely therethrough, are connected to the extremities of line helix 3. An additional binding screw 6 carried by head 2 and extending transversely therethrough, has its inner end connected to one terminal of the neutralizing helix 4, the other extremity of the latter being connected to the binding screw 7 which extends transversely

through the head 2'. The binding screw 7 is connected to a metallic extension 8 which acts as the stationary contact and coöperates with the adjustable stop on the armature hereinafter to be referred to.

A metallic yoke 9 is affixed to the head 1 by suitable fastening elements and extends laterally therefrom. This yoke is provided at its intermediate portion with the usual adjusting screw 10, which latter performs the functions of a back stop. To enable ready connections with the binding screws 5 and 6 respectively, they are each provided with a metallic extension 11 which form conductor terminals to which the various conductors used in connection with the relay may be attached.

The structure above outlined is supported upon a base 12 formed of any suitable metal. This base has an upwardly projecting portion 13 which is apertured adjacent its extremity in alinement with threaded opening 14 formed in one end of core 1 as shown in Fig. 1 of the drawings. A fastener 15 passing through the aperture in the portion 13 of the base and entering opening 14 in core 1, securely fastens the relay to the base as will be readily understood without further description. As the base 12 is to be used for conducting purposes, a conductor terminal 16 has one extremity engaged by the fastening element 15, the other extremity thereof projecting rearwardly from the upwardly extending portion 13 of the base.

An armature 17 triangular in configuration, is disposed within the yoke 9. This armature 17 has its base beveled as at 18, the beveled edge resting in the transversely extending recess 12' formed therein. The vertex of armature 17 is pierced by the usual adjusting screw 20 which latter coöperates with the extension 8 hereinbefore referred to and is adapted to close the external circuit hereinafter to be mentioned.

In operation, a battery 21 has its positive terminal connected by a conductor 22 to the conductor terminal of one of the binding screws 5. The other or negative pole of battery 21 is connected by a conductor 23 to the conductor terminal of the remaining binding screw 5. Conductor 23 has included therein resistance 24 and key 25. This, the line circuit, when closed, energizes the line helix or coil 3 and causes the adjustable contact on armature 17 to be brought into engagement with the stationary contact formed by extension 8. When these contacts are in engagement, a circuit will be completed from the positive pole of battery 21 through conductor 26 to conductor terminal 16, thence through the base 12, armature 17, adjustable stop 20, contact 18, neutralizing coil 4, binding screw 6, the conductor terminal carried thereby, conductor 27, variable resistance 28, armature 29, tell tale lamp 30, and conductor 31 to the negative pole of battery 21. This, the external or control circuit, energizes the neutralizing coil 4 and tell tale lamp 30, and in this connection it is pointed out that the resistance offered by the neutralizing coil 4 is such as not to in any way decrease or impair the efficiency of the lamp 30. By arranging the neutralizing coil on core 1, in the manner aforesaid, if the adjustable contact on armature 17 fails to disengage stationary contact 8 when the line circuit is open, then inasmuch as the external circuit will still be effective, the neutralizing coil 4 will counteract the residual magnetism in core 1 and thus permit armature 17 to drop through gravity, into engagement with its back stop. Inasmuch as the neutralizing coil 4 is included in series with the lamp 30, and does not effect the efficiency of said lamp, it at once becomes apparent that the advantages accruing from this coil are obtained without waste of electrical energy because in any instance sufficient current must be taken from battery 21 to energize lamp 30. Therefore in view of the above, it is seen that I have provided a simple and efficient means which will overcome "sticking of the armature" by eliminating residual magnetism as well as one that will in no way detract unnecessary energy from the energizing battery of the line circuit.

Although in the foregoing I have set forth certain elements as best adapted to perform the functions allotted to them, nevertheless, it is to be understood that various minor changes as to form, substance, etc., may be resorted to within the scope of the appended claims without departing from or sacrificing any of the principles of this invention.

I claim:

1. The combination with an electro-magnet having a movable armature, of a line helix disposed upon the core of said magnet to energize the latter and actuate said armature, an external circuit controlled by said armature, and a neutralizing coil included therein and tending to produce opposite polarity in the core of said magnet, said coil being disposed in series in the external circuit substantially as and for the purpose set forth.

2. The combination with an electro-magnet having a movable armature, of a line helix disposed upon the core of said magnet to energize the latter and actuate said armature, an energizing circuit for said line helix, and a signal circuit controlled by said armature and including a neutralizing coil tending to produce opposite polarity in the core of said magnet, said coil having such resistance as not to detract from the efficiency of said signal substantially as and for the purpose set forth.

3. The combination with an electro-mag-

net having a movable armature, of a line helix disposed upon the core of said magnet to energize the latter and actuate said armature, an energizing circuit for said line circuit, a lamp circuit controlled by said armature, a neutralizing coil disposed upon the core of said magnet and included in series in said lamp circuit, said neutralizing coil tending to produce opposite polarity in said core and having a resistance insufficient to detract from the efficiency of said lamp circuit substantially as and for the purpose set forth.

4. In a relay of the character described the combination with a magnetizable core, insulated heads disposed upon the extremities thereof, a metallic base supporting said heads and an armature movably mounted on said base, a line helix disposed upon said core to magnetize the latter and actuate said armature, an energizing battery for said line helix, an adjustable stop carried by said armature, means for conducting electrical energy from the positive pole of said battery to said adjustable stop, a stationary contact mounted upon one of said heads for coöperation with said adjustable stop, a neutralizing coil disposed upon said core to produce opposite polarity therein, a connection between one extremity of said coil and said stationary contact, a signal lamp, a connection between one terminal of the latter and the negative pole of said battery, and an additional connection between the remaining terminal of said lamp and the free extremity of said neutralizing coil substantially as and for the purpose set forth.

5. In a relay of the character described the combination with a magnetizable core, insulated heads disposed upon the extremities thereof, a metallic base supporting said heads and an armature movably mounted on said base, a line helix disposed upon said core to magnetize the latter and actuate said armature, an energizing battery for said line helix, an adjustable stop carried by said armature, a connection between the positive pole of said battery and said metallic base whereby electrical energy may be conveyed to said adjustable stop, a stationary contact mounted upon one of said heads for coöperation with said adjustable stop, a neutralizing coil disposed upon said core to produce opposite polarity therein, a connection between one extremity of said coil and said stationary contact, a signal lamp, a connection between one terminal of the latter and the negative pole of said battery, and an additional connection between the remaining terminal of said lamp and the free extremity of said neutralizing coil substantially as and for the purpose set forth.

In testimony whereof I have hereunto set my hand in presence of two subscribing witnesses.

JAMES F. GAFFNEY.

Witnesses:
HENRY MILLER,
DAVID M. GILGER.