J. M. E. BAACKES.

MACHINES FOR NOTCHING WIRE IN THE MANUFACTURE OF NAILS.

No. 193,910 Patented Aug. 7, 1877.

FIG. 1

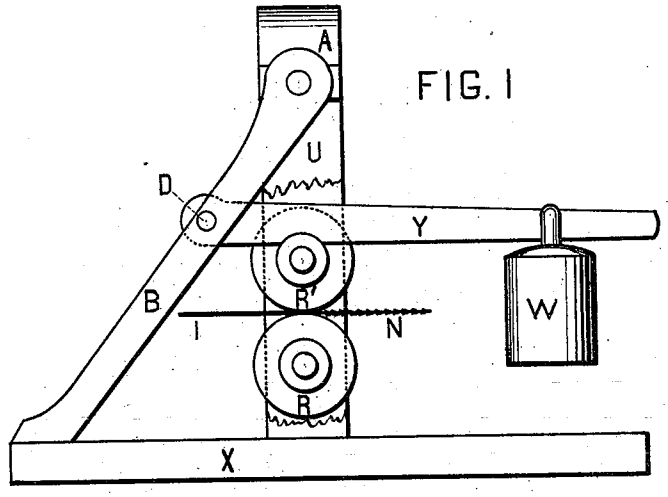

FIG. 2

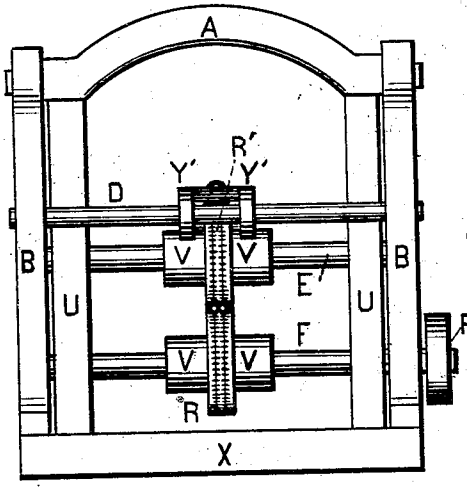

FIG. 3

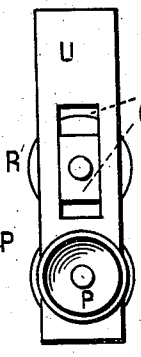

FIG. 4

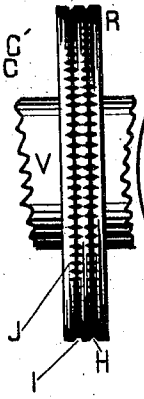

FIG. 5

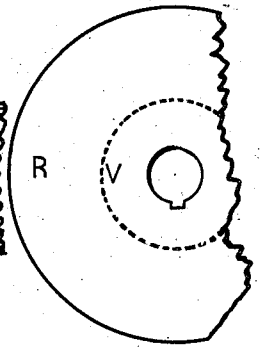

ATTEST

C. Walton Jr.

J. Riffle.

INVENTOR

John Michael E. Baackes,

per Wm. Hubbell Fisher,

Atty in fact.

N. PETERS, PHOTO-LITHOGRAPHER, WASHINGTON, D. C.

UNITED STATES PATENT OFFICE.

JOHN MICHAEL E. BAACKES, OF COVINGTON, KENTUCKY, ASSIGNOR OF TWO-THIRDS HIS RIGHT TO JOHN L. STEPHENS AND JOHN B. MECKLENBORG, OF SAME PLACE.

IMPROVEMENT IN MACHINES FOR NOTCHING WIRE IN THE MANUFACTURE OF NAILS.

Specification forming part of Letters Patent No. **193,910**, dated August 7, 1877; application filed March 12, 1877.

To all whom it may concern:

Be it known that I, JOHN MICHAEL E. BAACKES, of the city of Covington, State of Kentucky, have invented certain new and useful Improvements in Machines for the Manufacture of Wire Nails, of which the following is a specification:

The wire nail of commerce is superior in point of finish to the cut-nail. Its surface, however, is quite smooth, for which reason it does not retain a sufficient hold upon the wood into which it is driven, and is, therefore, inferior in this respect to the cut-nail.

I remedy this defect by roughening, corrugating, or notching the surface of the nail. The elasticity of the wood receiving it is thus taken advantage of, and greatly aids the nail in making a stubborn resistance to every attempt to withdraw it. A wire nail, so made, will retain its hold upon the wood better than a cut-nail.

The invention which is the subject of these Letters Patent is a new machine, whereby I am enabled to impress on the surface of any length of wire the roughening, corrugations, or notches referred to, preparatory to making the same into nails; and, secondly, to accomplish this impression with great rapidity and at a very infinitesimal expense.

The machine, in general, consists of two rolls, whose peripheries are each provided with one or more channels or grooves roughened, corrugated, or notched in the manner in which it is desired to mark or impress the surface of the nail, said rolls being brought into conjunction, and kept there by devices hereinafter described, in such a manner that the wire passed between the rolls shall be moved along by the rotation of the rolls, and, at the same time, be notched, roughened, or corrugated, in readiness to be cut, pointed, and headed in the nail-machine.

In the accompanying drawings, Figure 1 is a side elevation of a machine embodying my invention, and Fig. 2 is a front view of the same. Fig. 3 is an elevation of one side of the main frame of the machine, exhibiting the relation of the same to the power-pulley and the journal of the upper roll. Fig. 4 is a front elevation of one of the rolls of about ordinary working-size, and Fig. 5 is a side view of a portion of the same.

The frame of the machine is constructed of a bottom, X, two uprights, U, a top piece, A, and two braces, B. The uprights U are secured to the bottom X and the top A in any suitable manner. Braces B attached to the bottom, at some distance from the foot of the upright, extend obliquely in vertical planes from the bottom to the ends of the top A, and are suitably secured thereto. Here each end of the top passes through the upper end of a brace, and thus strongly secures the frame U A against deflection from the perpendicular. The rolls R R′ are suitably keyed or fastened on their respective shafts E and F. On each side of each roll is a collar, V, which operates to brace the rolls from side deflection. The upper collars also perform another function, viz: they receive the pressure of the sides Y′ of lever Y, the end of which is fulcrumed on a rod, D, extended between the braces B. This lever is preferably of one piece, and is slotted where it is over the upper roll in order to allow the latter to freely rotate, the sides of the slot resting upon the smooth peripheries of their respective collars, and being made sufficiently concave to fit the said peripheries. The shaft F is fixedly journaled in the uprights, and one end thereof projects beyond the frame and brace, and has the power pulley P attached thereto. Shaft E is journaled in boxes C, which are free to slide vertically in vertical slots C′ in the uprights.

Upon the outer end of the lever Y is hung a weight, W, sufficient to cause the upper roll R′ to impinge against the lower one R with sufficient force to perfectly impress upon the wire passing between the rolls and in grooves H or I the notches or other corrugations with which said grooves are provided. In the roll R, Fig. 4, are seen two grooves, H and I, of different capacity, because intended to operate on two different but successive sizes of wire. Corresponding grooves of like capacity and similarly notched or marked are employed on roll R′.

I commonly thus provide each roll with two

or more grooves of different size, as I can thus mark the surface of different sizes of wire without changing the rolls. The rolls (upper and lower) are so grooved and placed that grooves of like capacity shall come opposite each other. The grooves are enough smaller than the size of the wire they are to impress so that they shall have sufficient room, before coming together, to properly mark the wire.

As may be inferred from the statement of the purpose of my invention, the character of the corrugations in the grooves is purely a matter of choice, and such corrugations can be infinitely varied from a roughening, such as that seen on the surface of a fine file, to sizable notches, as J. (See Fig. 4.) The direction and shape of the notches or depressions, and of the raised portions of metal in the grooves between said depressions, may also be varied. So, also, the shape, in cross-section of the groove, may be altered. My invention covers all of these variations, which are merely obvious mechanical modifications of the one principle underlying them all.

The mode in which my invention operates is as follows: Power being applied to the pulley P, the lower roll is rotated, and rotates as the wire passes through roll R′ resting thereon. A drum or coil of wire is conveniently arranged so as to have wire ready for the machine as rapidly as needed. The wire is passed into the proper groove between the rolls, and the pressure of the rolls upon the wire causes it to move through the rolls without any auxiliary aid. The machine is thus a self-feeder. The forward movement of the wire causes the upper roll to rotate. The wire thus leaves the machine with its surface properly marked by the corrugations of the grooves through which it has just passed, and is now ready to be made into nails.

Some idea of the value of my invention may be had from the fact that I am able to mark the surface of from nine hundred to one thousand inches of wire a minute, and the expense of thus marking it is less than one per cent. of the cost of making the nail.

Instead of lever Y any other equivalent device, whereby the two rolls may be pressed together sufficiently to properly mark the surface of the nail, may be employed without changing the principle of my invention.

What I claim as new, and desire to secure by Letters Patent, is—

The improved machine, substantially as herein described, for making notched wire for the manufacture of wire nails.

J. MICHAEL E. BAACKES.

Attest:

C. WALTON, Jr.,

J. D. MECKLENBORG.