R. V. CRAGGS.

MACHINE FOR PACKAGING CIGARETTES AND OTHER ARTICLES.

APPLICATION FILED JUNE 3, 1913.

1,169,012.

Patented Jan. 18, 1916.

14 SHEETS—SHEET 1.

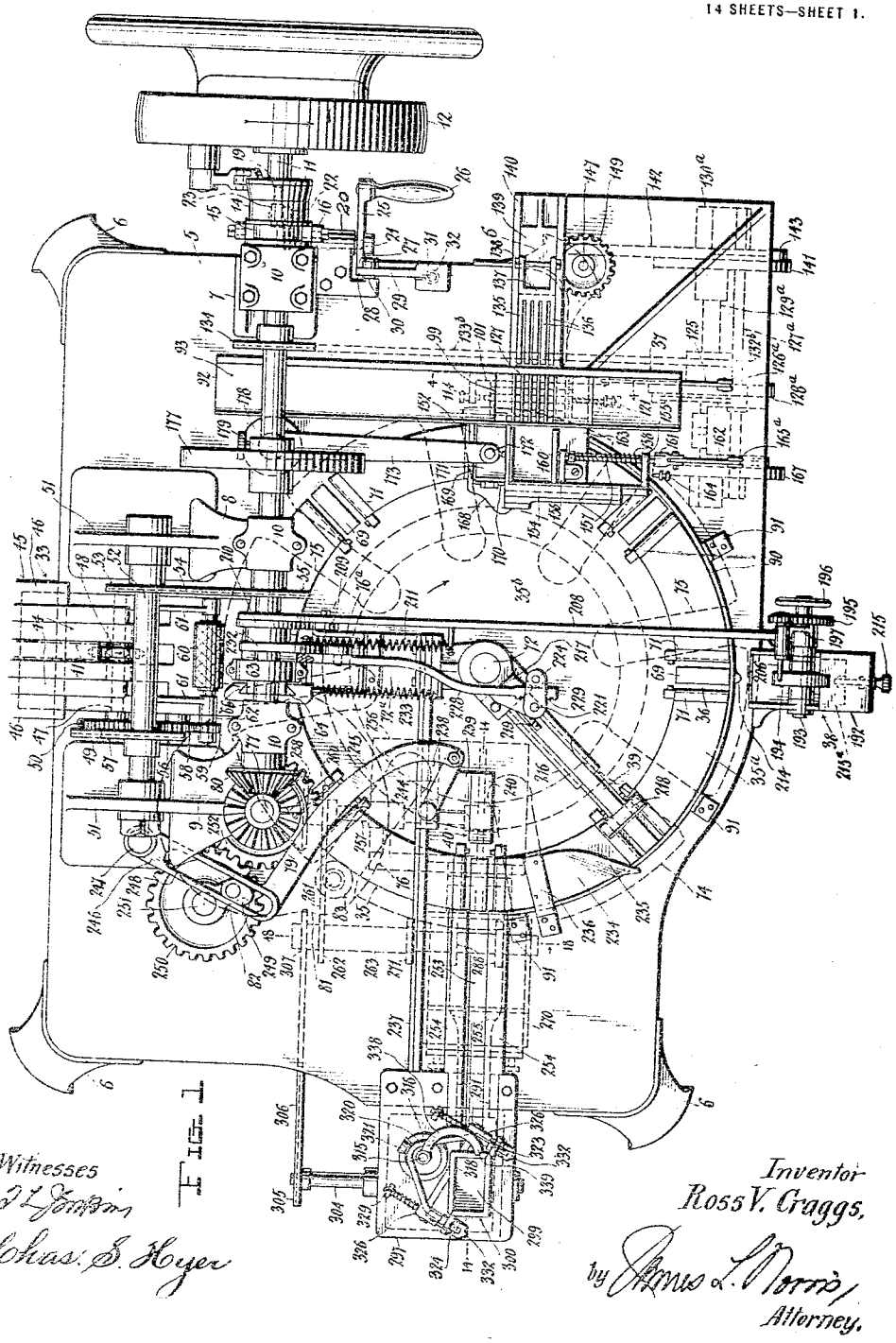

FIG. 1

Witnesses

J. L. Jenkins

Chas. S. Hyer

Inventor

Ross V. Craggs,

by James L. Norris,

Attorney.

R. V. CRAGGS.

MACHINE FOR PACKAGING CIGARETTES AND OTHER ARTICLES.

APPLICATION FILED JUNE 3, 1913.

1,169,012.

Patented Jan. 18, 1916.

14 SHEETS—SHEET 2.

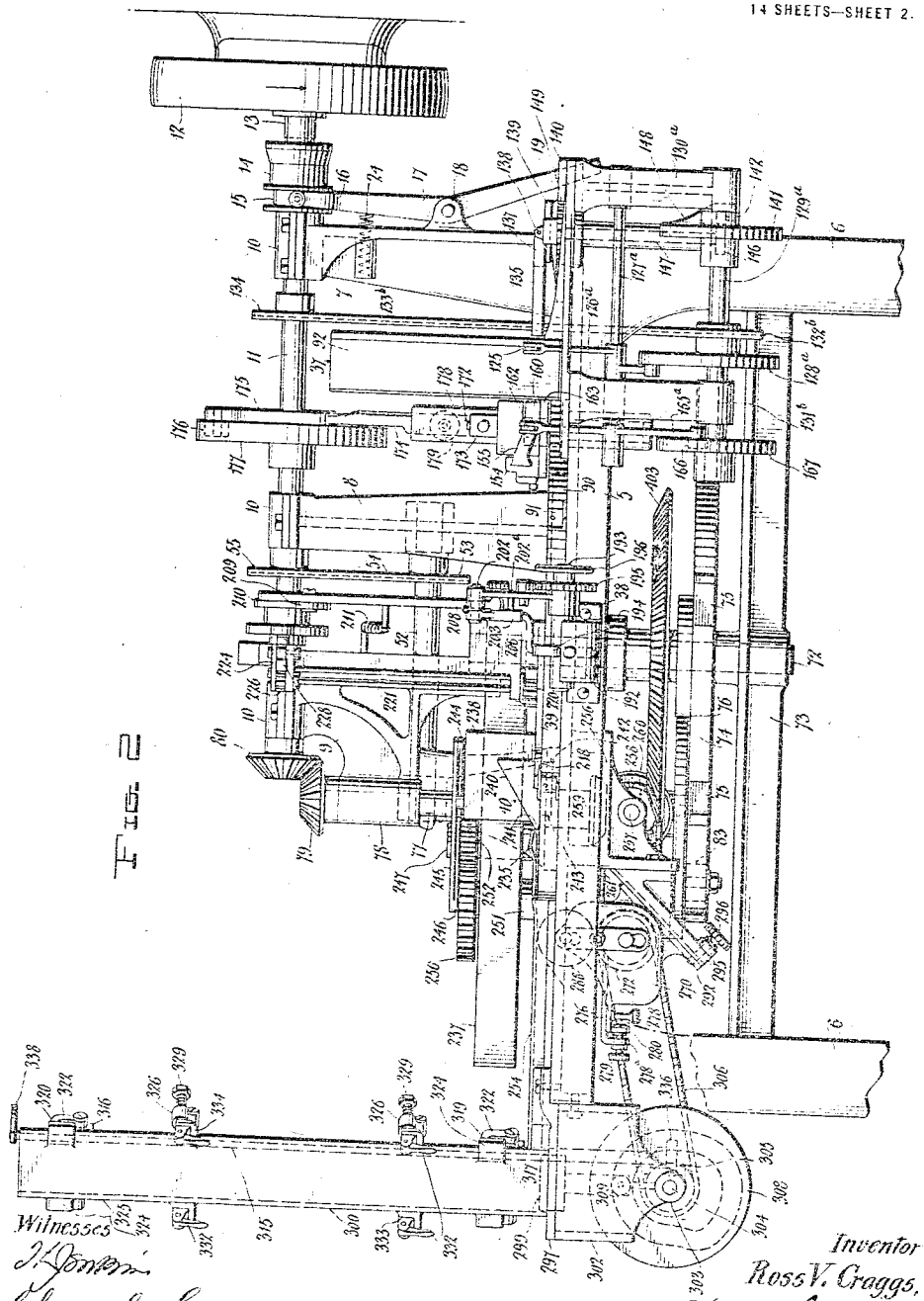

FIG. 2

Witnesses

J. Jonkin

Chas. S. Hyer.

Inventor

Ross V. Craggs,

by James L. Norris,

Attorney.

R. V. CRAGGS.

MACHINE FOR PACKAGING CIGARETTES AND OTHER ARTICLES.

APPLICATION FILED JUNE 3, 1913.

1,169,012.

Patented Jan. 18, 1916.

14 SHEETS—SHEET 3.

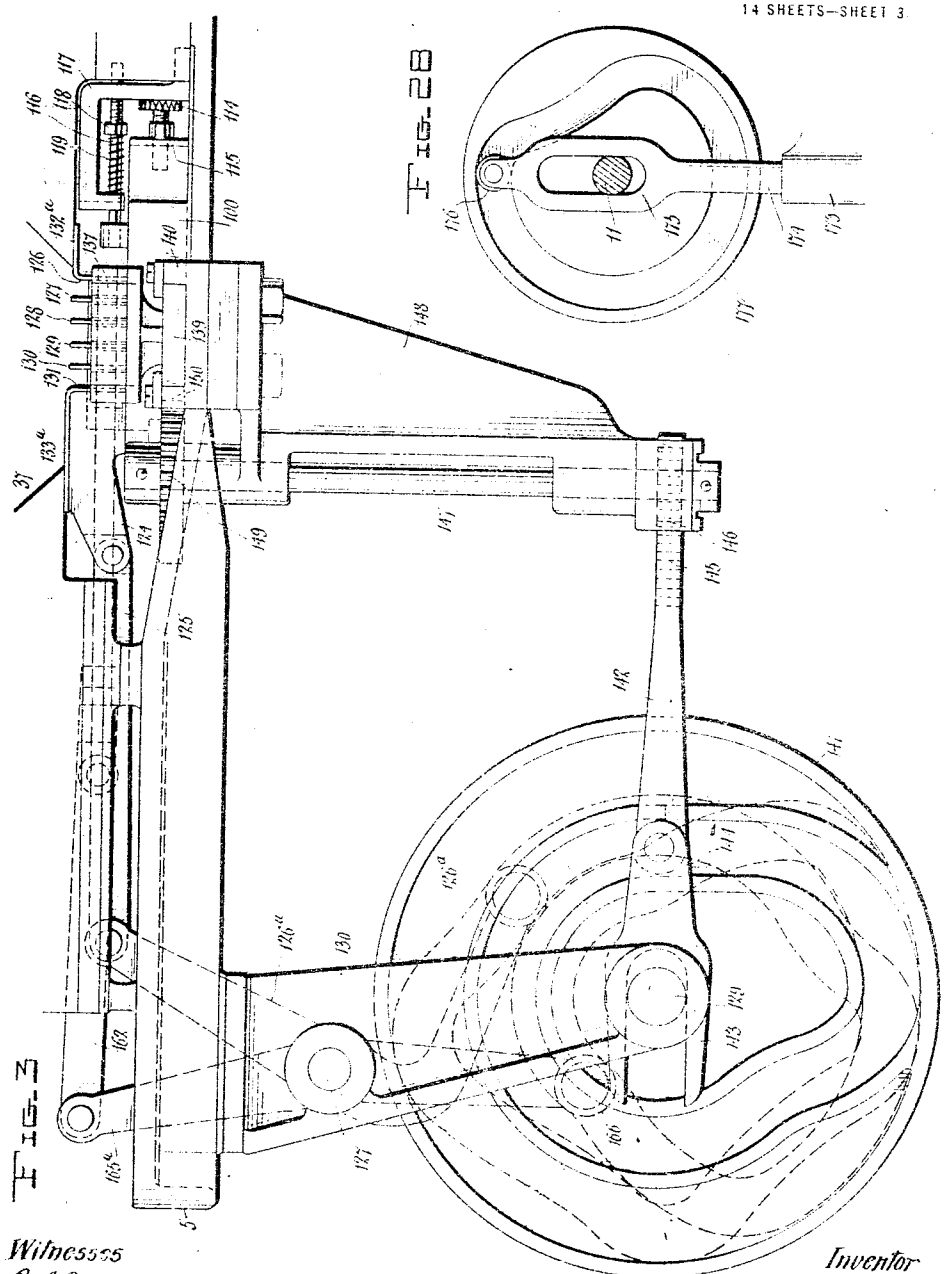

FIG. 3

FIG. 28

Witnesses

J. L. Jenkins

Chas. S. Hyer.

Inventor

Ross V. Craggs,

by James L. Norris,

Attorney.

R. V. CRAGGS.

MACHINE FOR PACKAGING CIGARETTES AND OTHER ARTICLES.

APPLICATION FILED JUNE 3, 1913.

1,169,012. Patented Jan. 18, 1916.

14 SHEETS—SHEET 4.

FIG. 4

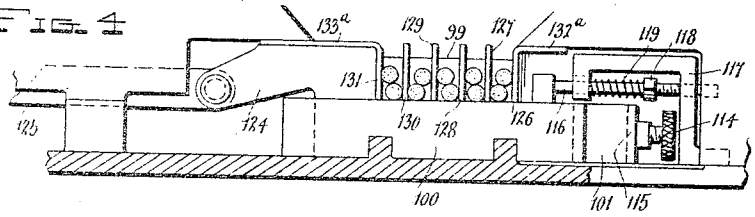

FIG. 5

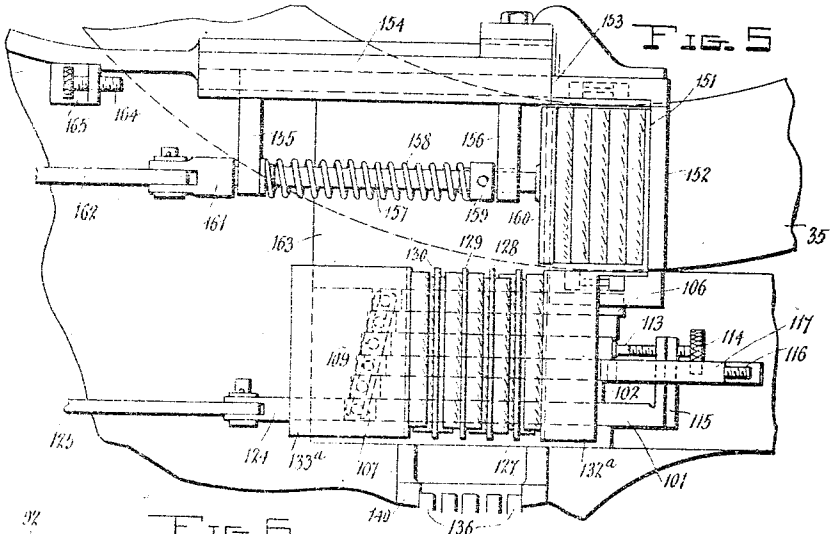

FIG. 6

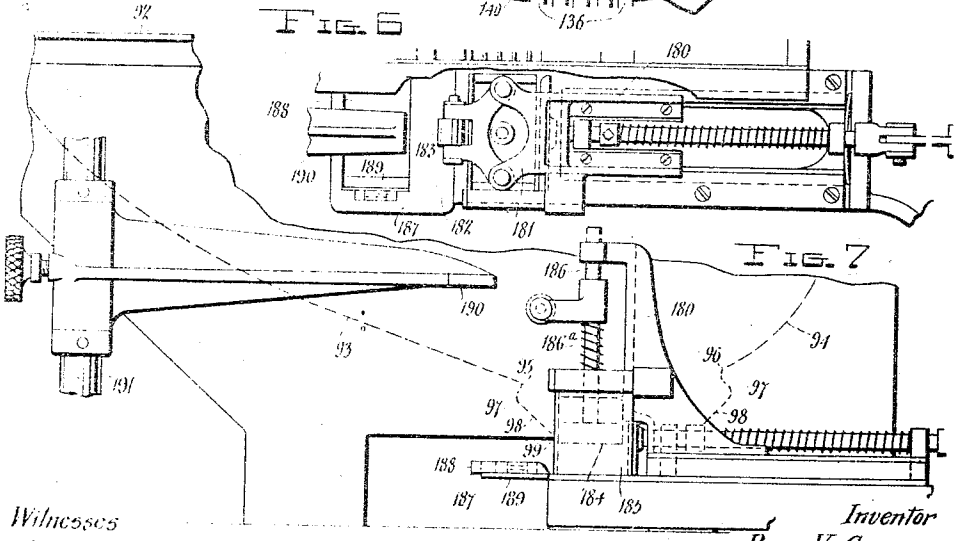

FIG. 7

Witnesses

J. L. Jenkins

Chas. S. Hoyer.

Inventor

Ross V. Craggs,

by James L. Norris,

Attorney.

R. V. CRAGGS.

MACHINE FOR PACKAGING CIGARETTES AND OTHER ARTICLES.

APPLICATION FILED JUNE 3, 1913.

1,169,012.

Patented Jan. 18, 1916.

14 SHEETS—SHEET 5.

Fig. 8

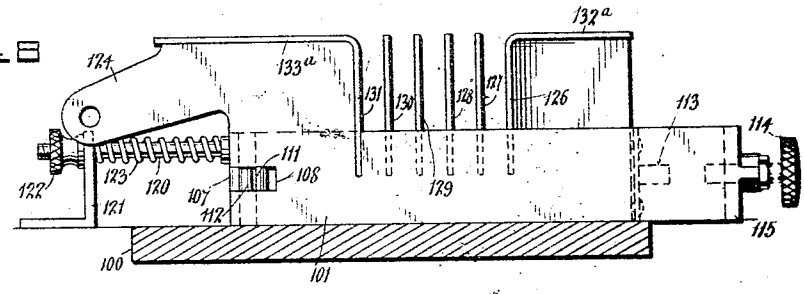

Fig. 9

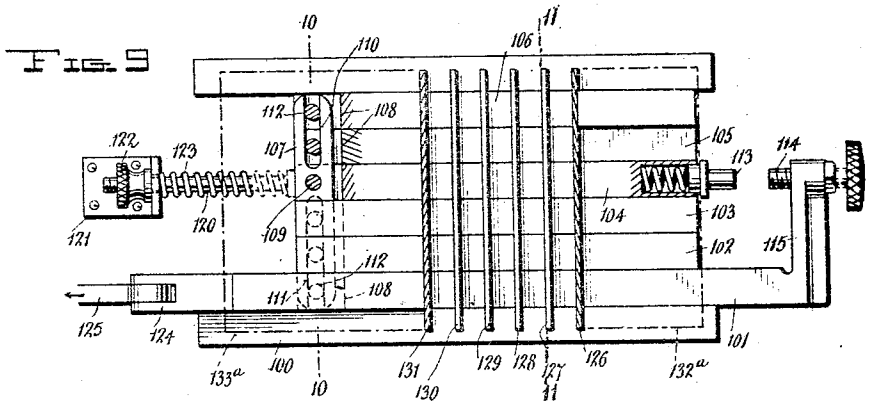

Fig. 10

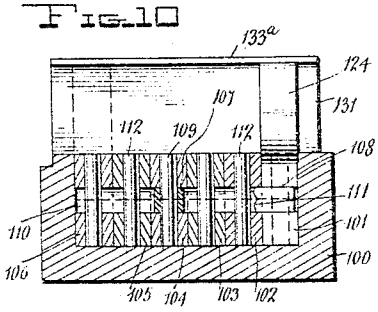

Fig. 11.

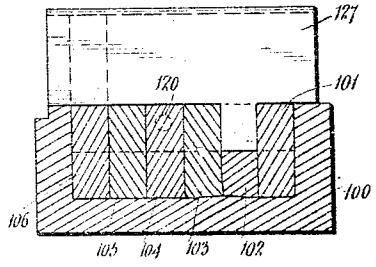

Fig. 12

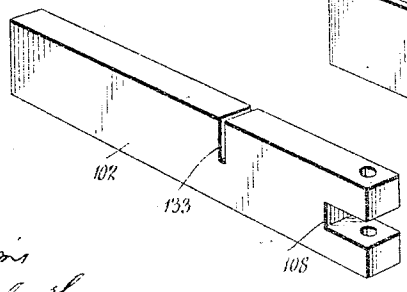

Fig. 13

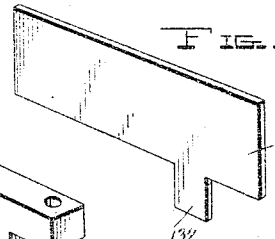

Witnesses

J. Norris

Chas. S. Hoyer

Inventor

Ross V. Craggs,

by Edward Norris

Attorney.

R. V. CRAGGS.

MACHINE FOR PACKAGING CIGARETTES AND OTHER ARTICLES.

APPLICATION FILED JUNE 3, 1913.

1,169,012.

Patented Jan. 18, 1916.

14 SHEETS—SHEET 6.

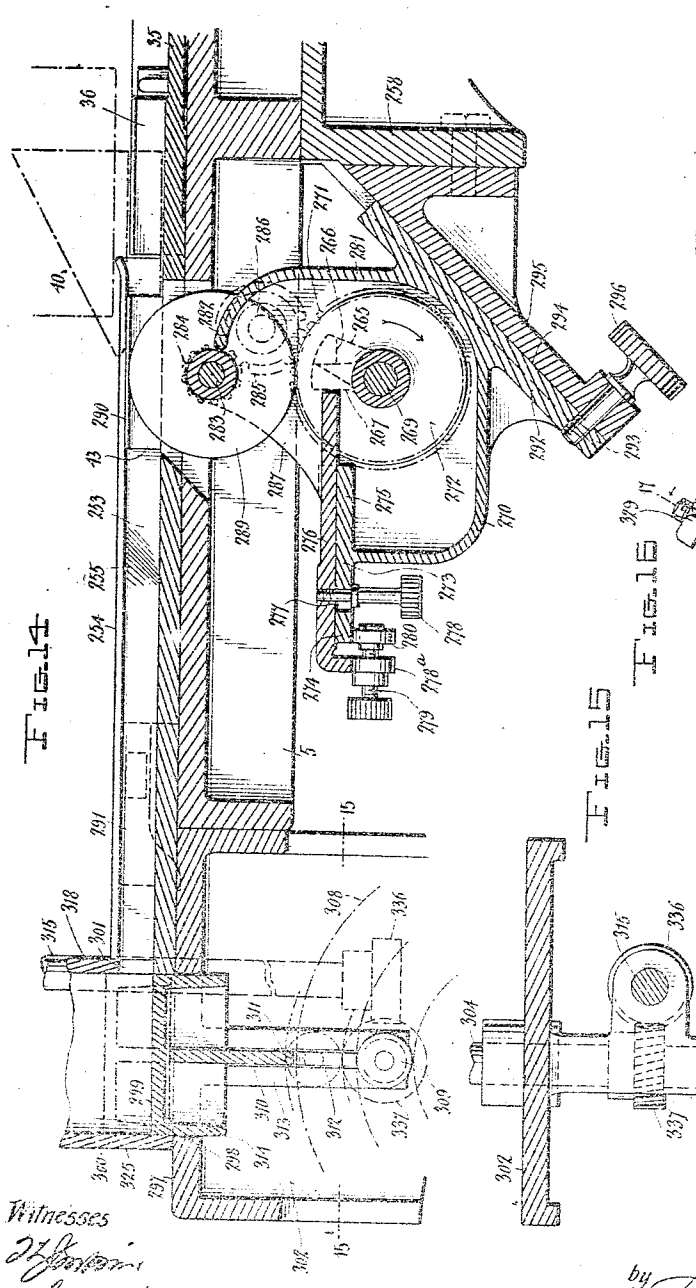

Fig. 14

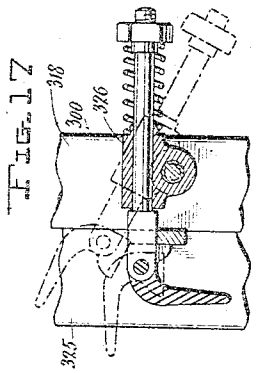

Fig. 17

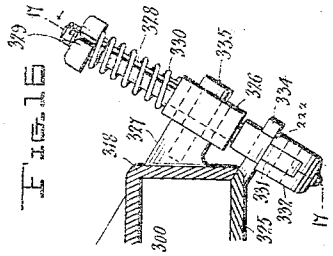

Fig. 16

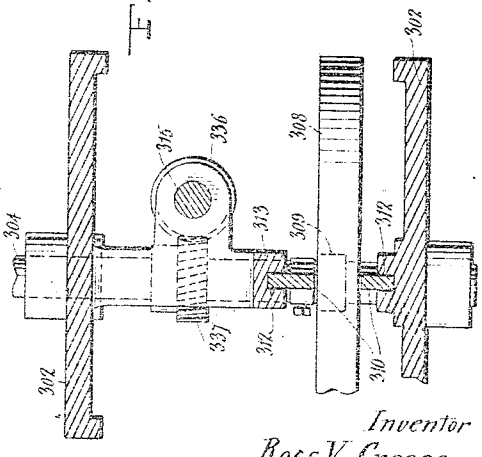

Fig. 15

Witnesses

Chas. S. Hoyer

Inventor

Ross V. Craggs,

by James L. Norris

Attorney.

R. V. CRAGGS.

MACHINE FOR PACKAGING CIGARETTES AND OTHER ARTICLES.

APPLICATION FILED JUNE 3, 1913.

1,169,012. Patented Jan. 18, 1916.

14 SHEETS—SHEET 7.

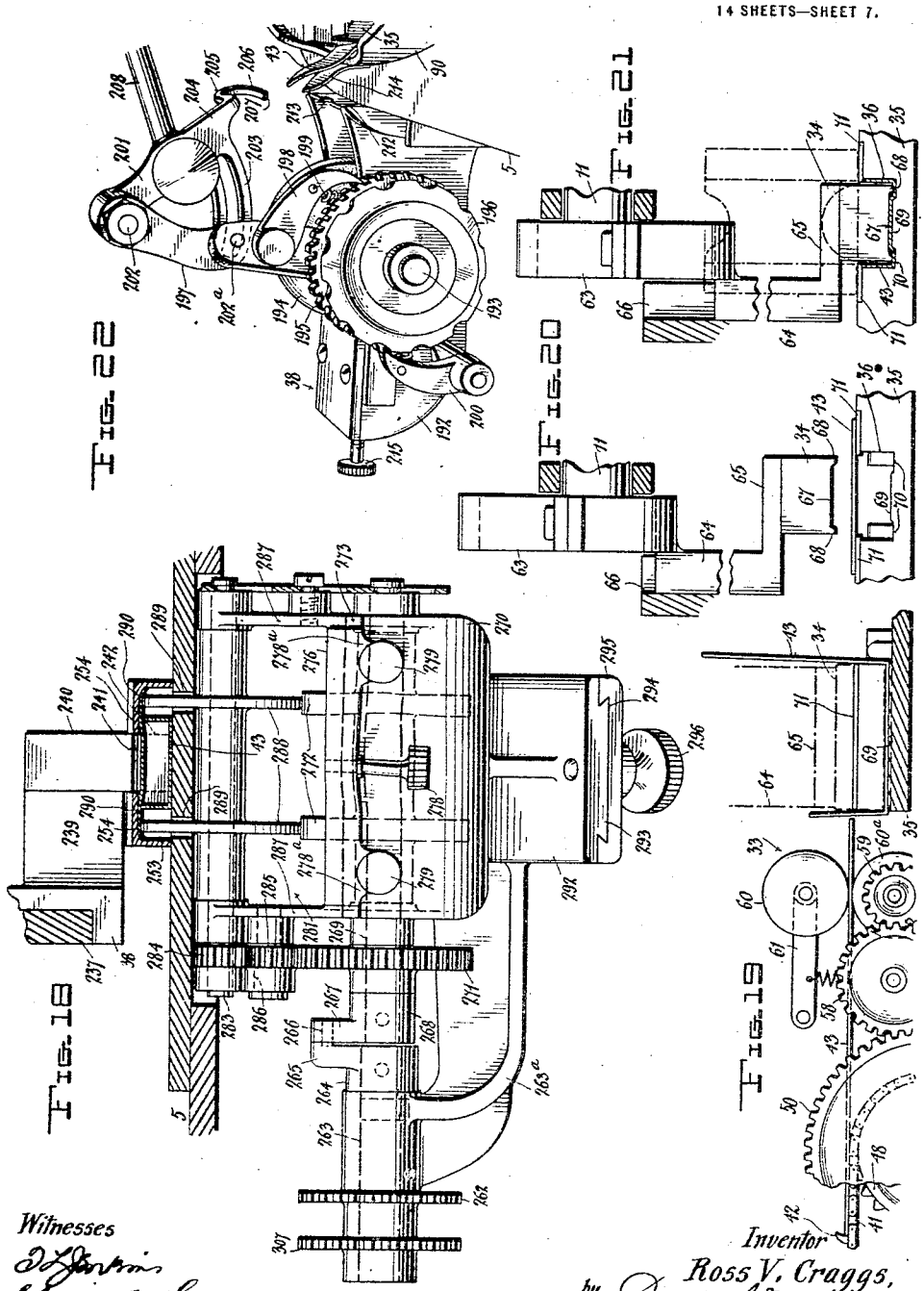

Witnesses

J. L. Jenkins

Chas. S. Hyer

Inventor

Ross V. Craggs,

by James L. Norris

Attorney.

R. V. CRAGGS.

MACHINE FOR PACKAGING CIGARETTES AND OTHER ARTICLES.

APPLICATION FILED JUNE 3, 1

1,169,012.

Patented Jan. 18, 1916.

14 SHEETS—SHEET 8.

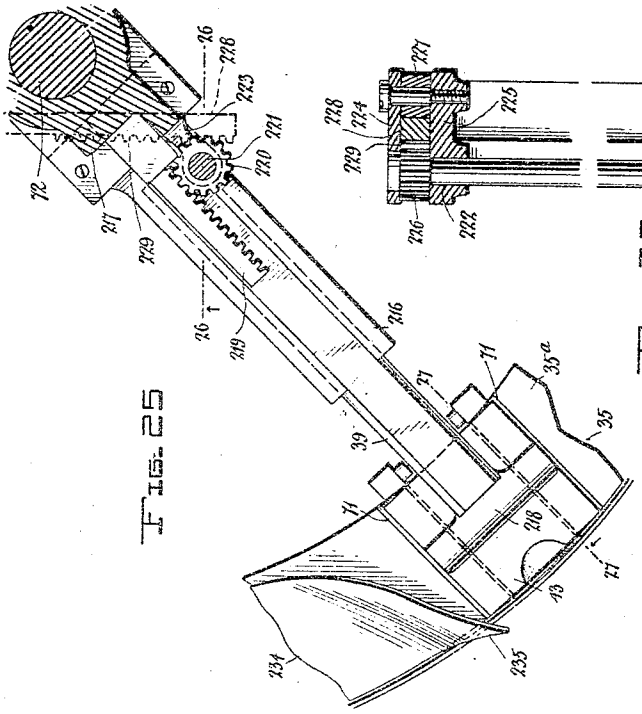

Fig. 25

Fig. 26

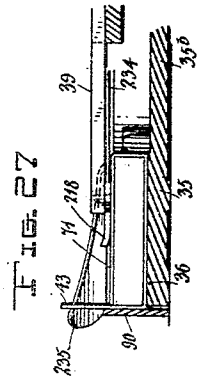

Fig. 27

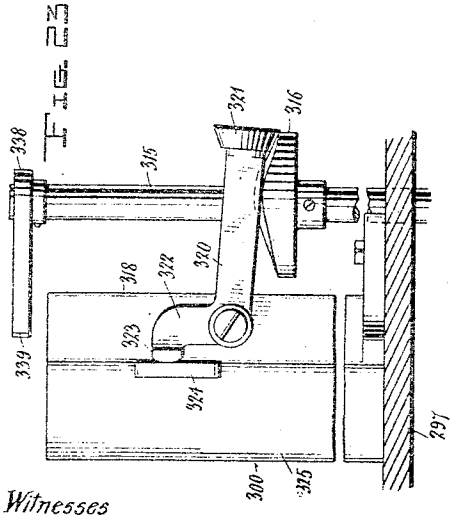

Fig. 23

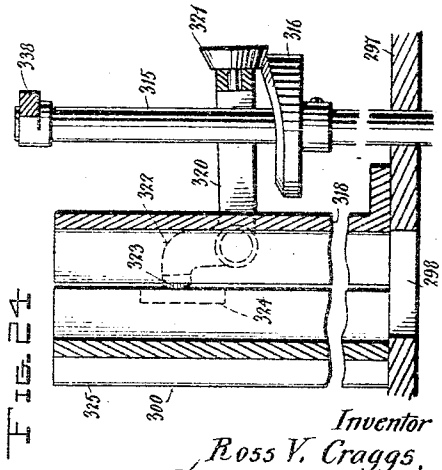

Fig. 24

Witnesses

J. L. Morris

Chas. S. Hoyer

Inventor

Ross V. Craggs,

by James L. Morris

Attorney.

R. V. CRAGGS.

MACHINE FOR PACKAGING CIGARETTES AND OTHER ARTICLES.

APPLICATION FILED JUNE 3, 1913.

1,169,012.

Patented Jan. 18, 1916.

14 SHEETS—SHEET 9.

FIG. 29

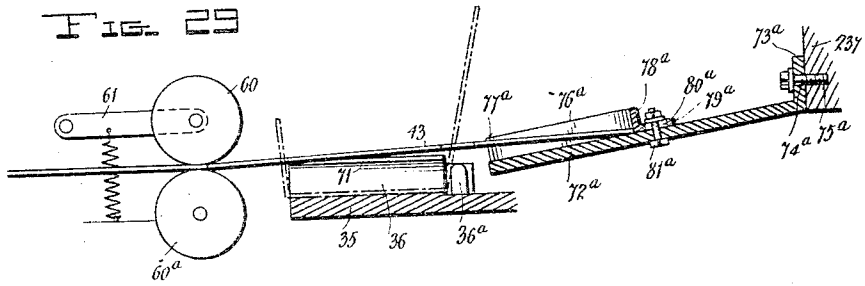

FIG. 30

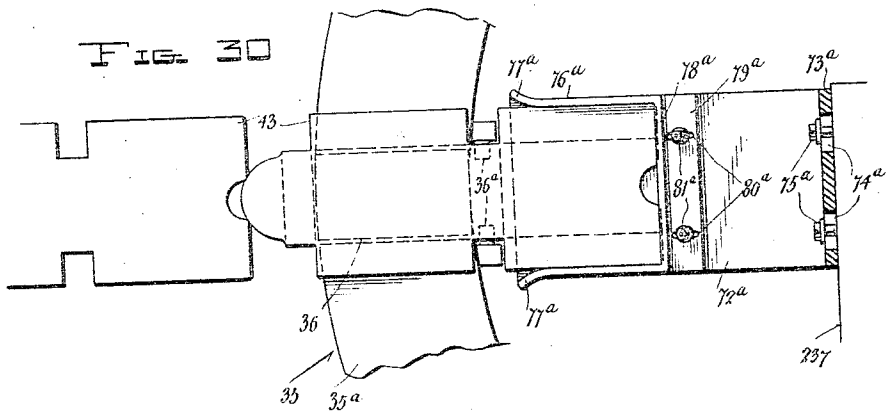

FIG. 31

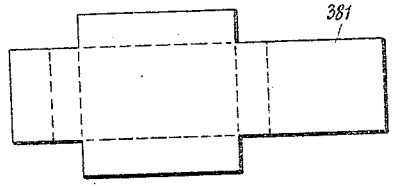

Witnesses

J. Johnson

Chas. S. Hoyer.

Inventor

Ross V. Craggs,

by James L. Norris

Attorney.

R. V. CRAGGS.

MACHINE FOR PACKAGING CIGARETTES AND OTHER ARTICLES.

APPLICATION FILED JUNE 3, 1913.

1,169,012.

Patented Jan. 18, 1916.

14 SHEETS—SHEET 10.

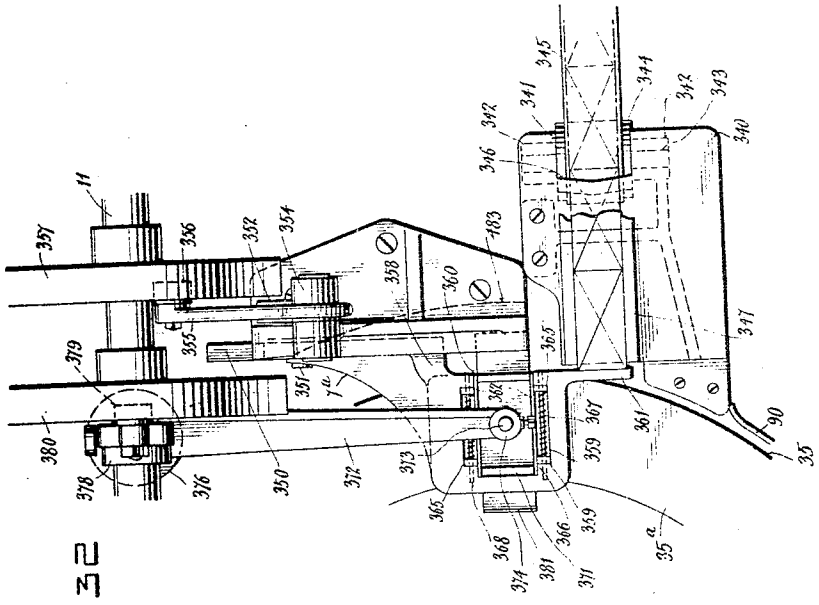

FIG. 32

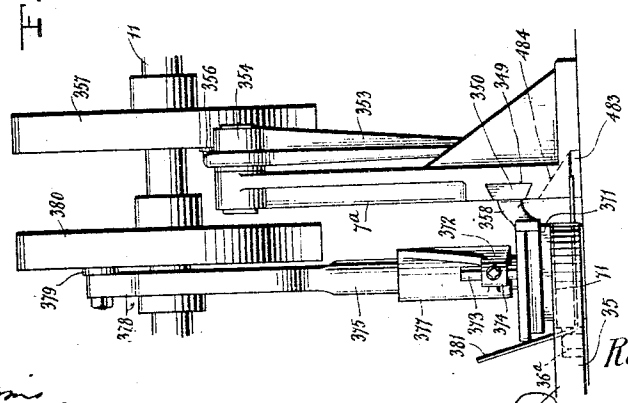

FIG. 33

Witnesses

Chas. S. Hyer

Inventor

Ross V. Craggs,

by Louis L. Morris,

Attorney.

R. V. CRAGGS.

MACHINE FOR PACKAGING CIGARETTFS AND OTHER ARTICLES.

APPLICATION FILED JUNE 3, 1913.

1,169,012.

Patented Jan. 18, 1916.

14 SHEETS—SHEET 11.

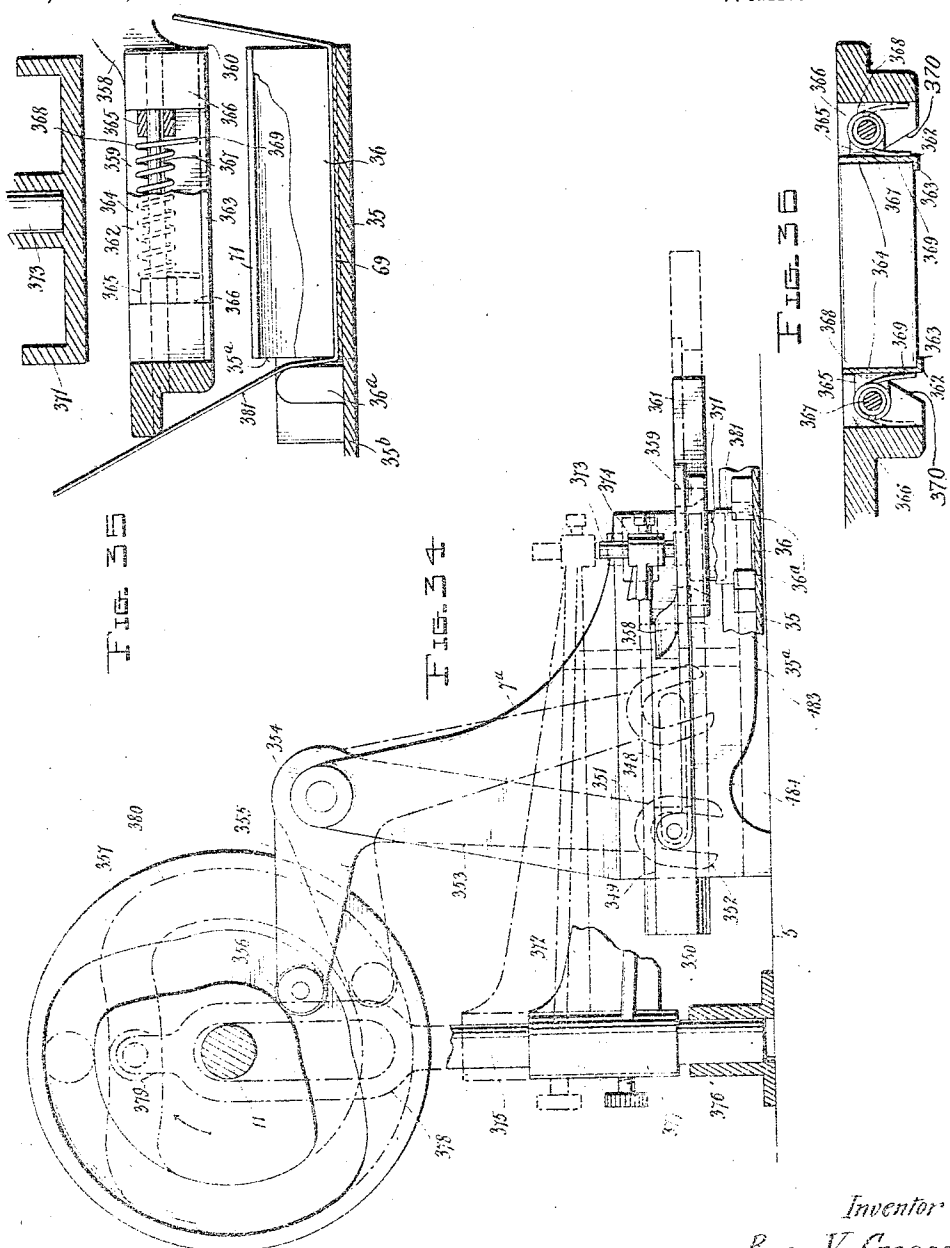

Witnesses

[illegible]

Chas. S. Hoyer

Inventor

Ross V. Craggs

by [illegible]

Attorney.

R. V. CRAGGS.

MACHINE FOR PACKAGING CIGARETTES AND OTHER ARTICLES.

APPLICATION FILED JUNE 3, 1913.

1,169,012. Patented Jan. 18, 1916.

14 SHEETS—SHEET 12.

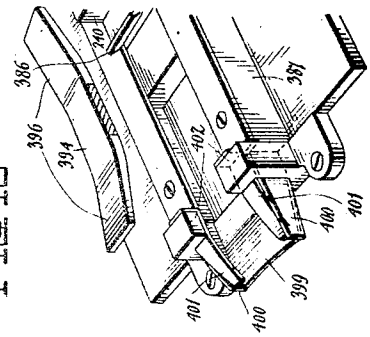

FIG. 40

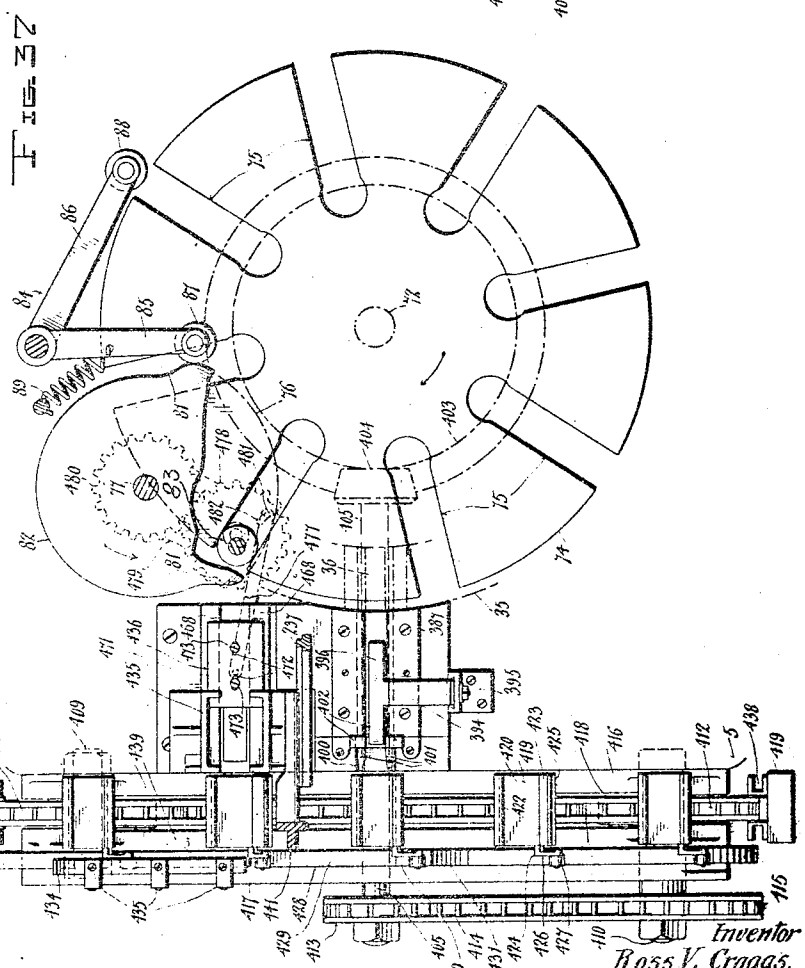

FIG. 37

Witnesses

J. L. Bertram

Chas. S. Hyer

Inventor

Ross V. Craggs,

by Amos L. Norris,

Attorney.

R. V. CRAGGS.

MACHINE FOR PACKAGING CIGARETTES AND OTHER ARTICLES.

APPLICATION FILED JUNE 3, 1913.

1,169,012.

Patented Jan. 18, 1916.

14 SHEETS—SHEET 13.

Fig. 38

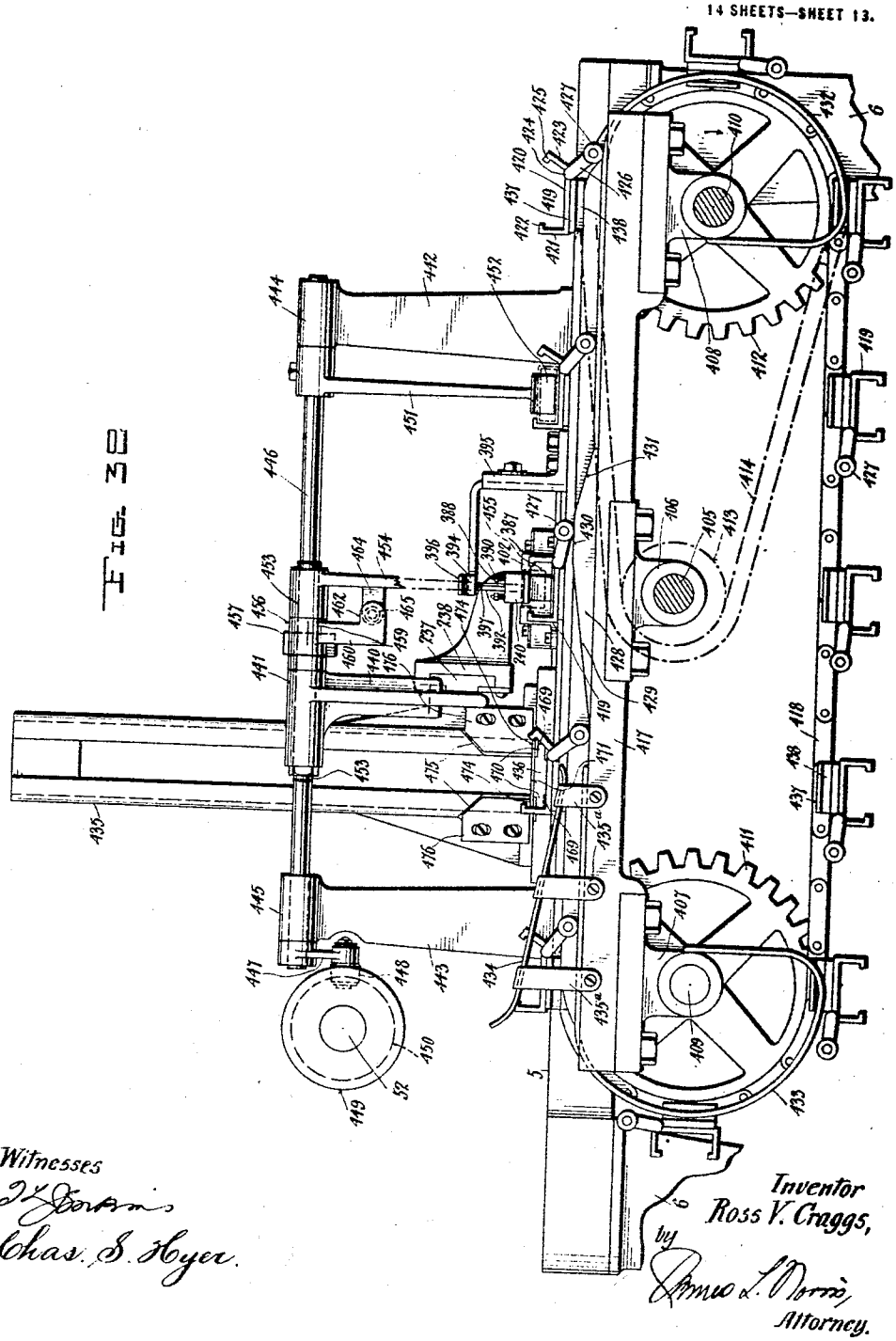

Witnesses

Chas. S. Hyer.

Inventor

Ross V. Craggs,

by James L. Norris,

Attorney.

R. V. CRAGGS.

MACHINE FOR PACKAGING CIGARETTES AND OTHER ARTICLES.

APPLICATION FILED JUNE 3, 1913.

1,169,012.

Patented Jan. 18, 1916.

14 SHEETS—SHEET 14.

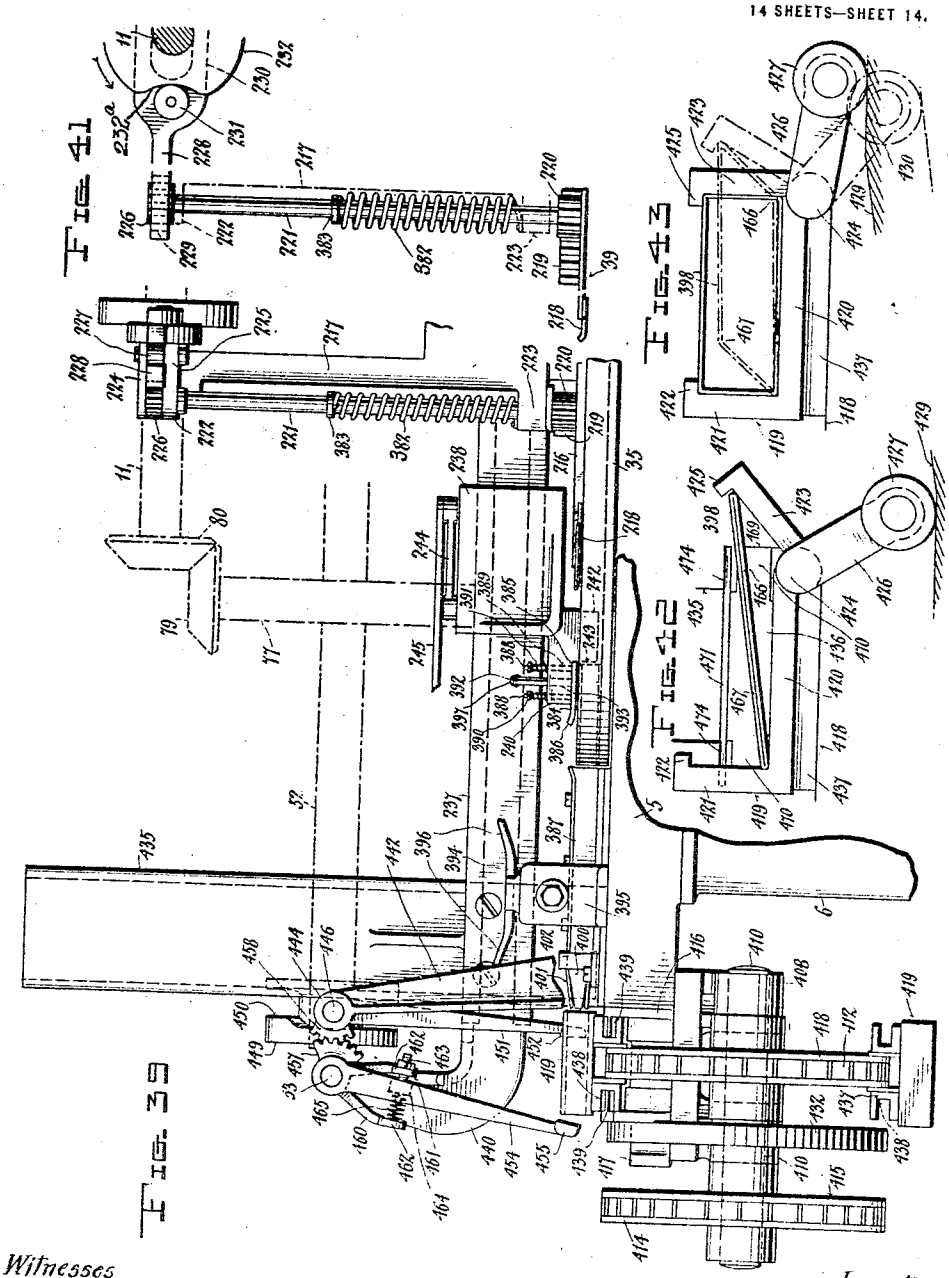

Witnesses

Chas. S. Hoyer

Inventor

Ross V. Craggs,

by James L. Norris

Attorney.

UNITED STATES PATENT OFFICE.

ROSS V. CRAGGS, OF BALTIMORE, MARYLAND, ASSIGNOR TO RICHARD H. WRIGHT, OF DURHAM, NORTH CAROLINA.

MACHINE FOR PACKAGING CIGARETTES AND OTHER ARTICLES.

1,169,012. Specification of Letters Patent. Patented Jan. 18, 1916.

Application filed June 3, 1913. Serial No. 771,555.

To all whom it may concern:

Be it known that I, Ross V. CRAGGS, a citizen of the United States, residing at Baltimore, in the State of Maryland, have invented new and useful Improvements in Machines for Packaging Cigarettes and other Articles, of which the following is a specification.

This invention relates to machines for packaging various articles, such for instance as cigarettes, cigars and other analogous articles, and for inclosing or wrapping the articles so packed.

The primary object of the invention is to provide mechanism for regularly feeding or positioning a holding or inclosing means for a predetermined quantity of cigarettes or the like at a point of supply of the cigarettes or other articles and to complete the closure and finally eject the confined or inclosed package of cigarettes or other articles from the mechanism in a commercially vendible condition.

A further object of the invention is to provide a series of mechanisms or devices which are constructed to act successively and in part simultaneously to shape a holder or inclosing means for cigarettes or other articles and regularly feed such holders or inclosures to a point of supply where a predetermined number of cigarettes or other articles are disposed therein, and then complete the inclosure of the cigarettes or other articles and deliver the packages as produced from the mechanisms.

The invention consists in the construction, arrangement and combination of the various mechanisms and devices by which the above named results are attained, as well as subcombinations thereof and details of construction of the individual mechanisms or devices as will be more fully hereinafter described and claimed.

The improved machine may be operated to inclose any predetermined number of cigarettes or like articles in wrappers, envelops, trays, boxes, slides and shells, or other devices, either with or without the application of an adhesive substance to complete the inclosure. Though the machine is capable of inclosing any article having a shape similar to a cigarette or cigar, it is preferred that it be used for packaging cigarettes, and in the subsequent description of the machine, together with its modifications, the several parts will be specified as operating in conjunction with cigarettes to illustrate the practicability of the mechanisms.

In the drawings: Figure 1 is a top plan view of a machine showing parts in dotted lines and embodying the features of the invention and particularly adapted for disposing the cigarettes in a paper package in contradistinction to a box or slide and shell. Fig. 2 is a side elevation of the machine shown by Fig. 1. Fig. 3 is an end elevation of the machine looking toward the devices for supplying and ejecting a predetermined number of cigarettes into the inclosing means therefor. Fig. 4 is a transverse vertical section taken in the plane of the line 4—4, Fig. 1. Fig. 5 is a top plan view on an enlarged scale of the means for assembling the cigarettes, a portion of the ejector therefor, the compression chamber, and a part of the mold wheel or disk. Fig. 6 is a top plan view of the compression chamber, compressor, and a portion of the coöperating means for controlling the bunching and bodily expulsion of the bunches of cigarettes embodying a modification. Fig. 7 is an elevation of a portion of the hopper and the modified mechanism particularly shown by Fig. 6. Fig. 8 is a detail sectional elevation of the assembling chamber for the cigarettes particularly illustrating the partitions and operating means therefor. Fig. 9 is a top plan view, partially in horizontal section, of the assembling chamber as illustrated by Fig. 8. Fig. 10 is a transverse vertical section on the line 10—10—, Fig. 9. Fig. 11 is a transverse vertical section taken on the line 11—11, Fig. 9. Figs. 12 and 13 are respectively detail perspective views of one of the slide bars and one of the partitions which is associated with said bar and constitutes part of the group of bars and partitions of the assembling chamber. Fig. 14 is a section taken in the plane of the line 14—14, Fig. 1. Fig. 15 is a horizontal section taken in the plane of the line 15—15, Fig. 14. Fig. 16 is a horizontal section of a portion of the receiving stack showing one of the locking devices therefor in top plan view. Fig. 17 is a section taken in the plane of the line 17—17, Fig. 16, and showing dotted and full line positions of one of the locking devices for the receiving stack. Fig. 18 is a section taken in the plane of the line 18—18, Fig. 1. Fig. 19 is a diagrammatic view particularly

illustrating a portion of the feeding mechanism for the inclosure for the cigarettes and the shaping plunger, together with a portion of the mold wheel or disk. Fig. 20 is a cross-sectional view through a portion of the guide and operating means for the shaping plunger and showing the latter in planes at right angles to that illustrated by Fig. 19 and particularly illustrating the shape of the bottom of the plunger and of the pocket or seat in a portion of the mold wheel or disk thereunder, the plunger being raised. Fig. 21 is a cross-section through the mold wheel or disk and the same parts of the guide and operating mechanism shown by Fig. 20 and illustrating the plunger as depressed and shaping the inclosing means for the cigarettes, the latter being also shown in cross-section and having a stop guide or limiting means indicated in dotted lines. Fig. 22 is a detail perspective view of the pasting mechanism for one of the flaps or extremities of the holder or inclosure for the cigarettes. Fig. 23 illustrates a detail sectional elevation and particularly showing the receiving stack broken through, means for expanding the latter at its upper extremity, and a wiping or clearing arm to remove the completed package from the top of the stack. Fig. 24 is a transverse vertical section through the receiving stack and a portion of the supporting means therefor, the stack being broken through, and illustrating the lower devices for expanding the stack. Fig. 25 is a sectional plan view illustrating the reciprocating folding arm coöperating with the inner flap or portion of the cigarette inclosure together with a portion of the operating mechanism therefor and a part of the mold wheel or disk showing a portion of the folding means thereon for engaging the outer flap or extremity of the inclosure for the cigarettes. Fig. 26 is a transverse vertical section on the line 26—26, Fig. 25. Fig. 27 is a section taken in the plane of the line 27—27, Fig. 25. Fig. 28 is a detail sectional elevation showing the operating cam and stem for the inclosure shaping plunger. Fig 29 is a detail sectional elevation particularly showing the stop guard for properly placing the blanks of the inclosures relatively to the shaping plunger after said blanks are fed over the mold wheel by the preliminary feeding rollers. Fig. 30 is a top plan view of the devices shown by Fig. 29. Fig. 31 is a detail plan view of one form of blank which may be used with the machine. Fig. 32 is a top plan view of a modified attachment for feeding bunches of partially inclosed cigarettes or like devices to the mold wheel and package or inclosure therefor. Fig. 33 is a front elevation of the mechanism shown by Fig. 32. Fig. 34 is an end elevation, partially in section and broken away, of the mechanism illustrated by Figs. 32 and 33. Fig. 35 is a detail sectional view in diagram showing the discharge plunger, carrier and a part of the mold wheel for coöperating with partically inclosed bunches or charges of cigarettes or the like. Fig. 36 is a longitudinal section through the carrier adapted to receive and hold preliminarily partially inclosed bunches or charges of cigarettes. Fig. 37 is a top plan view of the modified mechanism adapted to be disposed in place of the stack for pasted packages and operating particularly in connection with the slides and shells forming the packages for the cigarettes, together with a part of the main operating mechanism for the mold wheel and accompanying parts. Fig. 38 is an end elevation of the modified form of the completing and discharging mechanism shown by Fig. 37. Fig. 39 is a partial front elevation of the machine showing the completing and discharge mechanism illustrated by Figs. 37 and 38 applied thereto and also showing a slight modification in the means for operating the folding arm. Fig. 40 is a detail perspective view showing the outlet extremity of the guide for the slide and for receiving and holding the shells for the insertion of the slides carrying the charges of cigarettes. Fig. 41 is a detail sectional elevation of the modified means for operating the folding arm and its plate. Figs. 42 and 43 illustrate end elevations of traveling pockets for the shells and illustrating the manner of receiving said shells in flat collapsed condition and for opening the same ready to receive the slides.

The numeral 5 designates a table or support for all of the mechanisms and devices, and said table may be of any contour or dimensions and varied as hereinafter explained. The table is held at a suitable elevation above a floor or base by means of legs 6. Over the rear portion of the table 5 and held by uprights 7, 8 and 9 having bearings 10 at their upper extremities is a drive shaft 11 provided at one end with a loose pulley 12 adapted to be driven from a suitable power source and having clutch members 13 and 14 coöperating therewith, the member 13 being associated with the pulley and the member 14 splined or otherwise shiftably mounted on the shaft 11 to rotate with the latter. The clutch member 14 will be controlled as to its movement by the operator and has a groove 15 at its inner extremity engaged by a yoke 16 carried at the upper end of a bell-crank lever 17 fulcrumed as at 18 on the outer side of the upright 7 and provided with a depending arm 19. In a bearing boss or lug 20 projecting from the feed end of the table just below the clutch member 14, a crank shaft 21 is mounted and has on its rear end a crank 22 carrying a roller 23 at its free extremity which is in

continual engagement with the inner side of the depending arm 19 of the bell-crank lever 17. The bell-crank lever 17 is held in the normal position shown by Fig. 2, or so that the arm 19 will be in engagement with the roller 23 by a spring 24 seated in a portion of the upright 7 above the fulcrum of the said lever. On the forward end of the crank shaft 21 a hand lever 25 is mounted and has a grip or handle 26 at its upper end extending in a forward direction. The hand lever 25 is also provided with an inwardly extending catch finger 27 adapted to engage under an upstanding hook 28 at the inner end of an arm 29 intermediately fulcrumed as at 30 to the table 5 and provided with a trip or pressure table 31 at its forward extremity engaged on its under side by a spring 32 which normally holds the said trip or pressure table 31 elevated and the upstanding hook 28 in engagement with the finger 27. The purpose of this particular clutch operating mechanism is to provide means for permitting the operator to quickly disengage the clutch member 14 from the member 13 of the band wheel or pulley 12 in the event that an improper feed of the cigarettes or disposition of the closures ensues. When the operator depresses the table 31 and releases the hook 28 from the finger 27, the hand lever 25 may be swung outwardly, thereby clearing the roller 23 from the lower extremity of the depending arm 19 of the bell crank lever 17 and permitting the spring 24 to come into play and force the clutch member 14 into engagement with the clutch member 13 of the band wheel or pulley 12 and thus set the machine in motion. By throwing the hand lever 25 inwardly, the finger 27 is caught under the hook 28 and the lower end of the arm 19 is pressed outwardly and consequently the upper arm of the bell crank lever is simultaneously forced inwardly against the resistance of the spring 24 to release the clutch member 14 and throw the machine out of operation, the hook 28 at the rear end of the arm 29 and the trip or pressure table 31 sustaining the clutch member 14 in the position shown by Fig. 2. It will be understood that the shaft 11 will also be provided with a suitable fly wheel adjacent to the band wheel or pulley 12, and the mounting of this shaft will be carried out to the best advantage relatively to the devices coöperating therewith and from which power is taken to drive the several parts of the machine, as will be hereinafter explained.

The essential or main elements of the improved machine as disclosed by Figs. 1 to 28, inclusive, may be concretely specified as a feeding mechanism 33, an inclosure shaping plunger 34, a rotating mold wheel or disk 35 having a plurality of pockets or seats 36 therein at intervals, cigarette supply mechanism 37 embodying a plurality of coöperating instrumentalities, a preliminary pasting attachment 38, a folding arm 39 and package expelling and completing mechanism 40, the latter also including various devices for finally shaping and completing the package. The feeding mechanism 33, as shown in detail by Fig. 19, comprises a chain belt 41 having upstanding or projecting catch means 42 to engage the rear end of a blank 43, the said chain belt being disposed in a horizontal plane and centrally arranged relatively to longitudinal supports 44 of a feed chute 45 provided with opposite side members 46 between which the blank is confined. The feed chute as an entirety may be any suitable length, and blank feeding mechanism of any preferred form will be associated therewith to regularly deliver the blanks in proper position on the chain belt 41 for engagement with the projecting means or hooks 42 carried by the chain belt 41. In suitable bearing brackets or means depending from the inner extremity of the table 5 is a shaft 47 having a sprocket wheel 48 secured to the intermediate portion thereof, over which the chain belt 41 is trained, and on one end of the shaft 47 a sprocket wheel 49 is secured and also a spur gear 50. In bearing uprights 51 secured to the table 5, a power transmitting shaft 52 is mounted, and adjacent to one end is provided with a sprocket wheel 53 engaged by a chain belt 54 which also passes over a sprocket wheel 55 on the drive shaft 11. The power transmitting shaft 52 in line with the sprocket wheel 49 on the shaft 47 is also provided with a sprocket wheel 56, and over the two sprocket wheels 49 and 56 a chain belt 57 is trained and motion is thus given the shaft 47 in a proper direction to feed the blanks inwardly from the rear portion of the table 5 of the machine. The blanks 43 must be regularly cleared from the upwardly projecting devices or hooks 42 of the chain belt 41 so as to avoid dragging the rear portions of the said blanks downwardly and thereby disarranging the blanks in their feeding direction as the said projecting means or hooks 42 move downwardly over the intermediate sprocket wheel 48, and hence it is necessary that the movement of the blanks be materially accelerated just prior to the close approach and downward movement of the projecting means or hooks 42 relatively to the sprocket wheel 48. To quicken the movement of the blanks at this time, the spur gear 50 meshes with an intermediately supported pinion or gear 58 of less dimensions than the spur gear 50, and the pinion 58 in turn meshes with a smaller pinion 59 of lower roller 60^a, upper and lower rollers 60 and 60^a, the pinion 58 and the roller 60 being supported by suitable bracket means carried by the table 5, and as

shown by Fig. 1 the said roller 60 is held by bracket arms 61 and the roller 60ª by movable supporting means 62, so as to move vertically relatively to the roller 60 and exert a proper feeding pressure on the blanks. The rollers 60 and 60ª are fixed on suitable shafts, and these shafts and rollers are rotated at a speed much greater than the sprocket wheel 48 over which the chain belt 41 has movement, and consequently when the blank is fed between the rollers 60 and 60ª the latter draw the blanks inwardly at a materially increased rate of speed and cause said blanks to clear or become disengaged from the upwardly projecting means or hooks 42 on the chain belt 41. Each blank is thus projected inwardly over the mold wheel or disk 35, the latter being so timed as to its movement as to always have a pocket or seat 36 ready to have a blank disposed thereover, the blanks being successively fed over the pockets or seats 36 in a practically flat condition for a subsequent shaping operation. To facilitate the feed of the blanks with increased movement, the one roller 60 has a knurled face and thereby each blank is positively moved and maintained in proper feeding position. It will be understood that the chain belt 41 will operate at the opposite or rear terminal of the chute 45 in conjunction with an idler sprocket so that a regular actuation of the said chain belt will ensue. Any preferred form of chute 45 may be used, it being sufficient for the purposes of the present invention to illustrate the means whereby the several blanks are relieved from engagement with the upwardly projecting means or hooks 42 and the feed of the blanks increased by the gearing just explained.

On the shaft 11 an eccentric 63 is held adjacent to the position of the rollers 60 and 60ª, and connected to this eccentric, as clearly shown by Figs. 20 and 21, is a dovetail stem 64 having a lower offset 65 to which the shaping plunger 34 is secured. The dovetail stem 64 has vertical reciprocating movement in a dovetail guide 66, as clearly shown in top plan view by Fig. 1, the said dovetail guide being rigidly supported by an adjacent part of the frame or upright 9. The plunger 34 has the bottom face depressed, as at 67, to form or provide ribs 68 along the opposite sides thereof, and each pocket or seat 36 is formed with a central slightly raised bottom boss 69 and opposite side depressions 70; and at the upper portions of the sides of each pocket or seat are overhanging edges 71. Located inwardly a suitable or relative distance from the plane of movement of the plunger 34 is a blank stop, consisting of a supporting plate 72ª having an angular securing flange or projection 73ª with elongated slotted bolt openings 74ª to receive adjusting bolts 75ª, the said plate being shiftable laterally through the medium of the slots 74ª to dispose a stop guard 76ª held on the plate 72ª in alinement with but above the several pockets or seats 36 and in the longitudinal plane of movement of the blanks as they are fed over the pockets. The stop guard 76ª consists of a U-shaped flange body opening rearwardly and having the terminals of the sides flared as at 77ª, the cross connecting member 78ª of the stop guard being provided with an attaching flange or angular plate 79ª provided with slots 80ª extending transversely thereof to receive adjusting bolts 81ª, the stop guard being movable longitudinally of the plate 72ª to dispose the same in such relation to the plate and the blanks which successively engage the same as to positively receive the inwardly projected extremity of each blank when the latter has reached an accurate position over the pocket or seat 36 in the mold wheel 35 below. The plate 72ª of this attachment is arranged at a downward and rearward angle of inclination so that the rear lower terminal of the plate is below the horizontal plane of movement of the blanks as they come over the mold wheel or the pocket or seat at that time in position for receiving the blank. By disposing the plate 72ª at the angle just explained, the inner extremity of each blank is caused to strike the plate at a point between the rear flared terminals 77ª of the sides of the stop guard 76ª, and the inner extremity of the blank rides up over the plate 72ª until it strikes the cross member 78ª, when the blank feed ceases and the blank is disengaged from the rollers 60 and 60ª, and at such time the blank will be in proper position for depression into the pocket or seat 36 thereunder. At the time that each blank is thus moved inwardly over the rear portion of the mold wheel and empty pocket or seat 36, the plunger 34 will be in elevated position, but just as soon as the blank is disposed in place or engages the stop guard 76ª, the plunger 34 descends and presses the blank downwardly into the adjacent pocket or seat 26 and owing to the ribs 68 on the lower face of the plunger and the depressions 70, the side members of the blank are crowded in close to the opposite side walls of the pocket or seat 36 and the then upper edges of the side members of the blank are caught under the edges 71, as clearly shown by Fig. 21. The blank when pressed into the pocket or seat 36 is held by the overhanging edges 71 at the top portions of the opposite sides of each pocket against vertical displacement, and the flaps or members at the opposite extremities that may have to be folded or turned inwardly by subsequent operations stand up respectively at the outer and inner peripheries of the mold wheel or disk 35, the inner flaps or members being turned and held upwardly by convex

deflecting blocks 36ª at the inner terminals of the pockets 36.

The mold wheel or disk 35 has a rim 35ª in which the pockets or seats 36 are formed, the depth of the rim being approximately equal to or slightly greater than the depth of the packages desired to be formed, and the width of the rim 35ª approximately equals the length of the package, and from the inner portion of this rim 35ª to the center of the mold wheel or disk a flat web 35ᵇ is formed, the said web being closed and of comparatively reduced thickness. The mold wheel or disk 35 is fixed on the upper end of a shaft 72 extending downwardly through the table 5 to a bearing support 73 at a suitable distance below said table, as clearly shown by Fig. 2. It will be understood that this shaft 72 is mounted in suitable bearings, and fixed thereon is a Geneva plate or movement controlling medium 74 whereby the mold wheel or disk 35 is given a step by step rotation and positively held against movement at such intervals as may be necessary and during certain operations of the mechanisms therewith. The Geneva plate or movement controller 74 is formed with a series of radial slots 75, as clearly shown by dotted lines in Fig. 1, there being as many of these slots as there are pockets or seats 36 in the mold wheel. The Geneva plate or movement controller 74 and the shaft 72, together with the mold wheel or disk 35, are rotated at intervals as a unit through the medium of a cam disk 76 fixed to the bottom of a shaft 77, said shaft extending upwardly through the table 5 in suitable bearings and above the said table in rear of the mold wheel or disk 35 where it engages a bearing 78 projecting from the upright 9 and has a miter gear 79 on the upper end thereof which is held in continual mesh with a miter gear 80 on the inner end of the shaft 11. The cam disk 76 has a periphery in the main concentric to the shaft 77, but a portion of the periphery has concave depressions 81 connected by a convex edge 82 also concentric with the shaft 77, the entire periphery of the cam disk serving as an operating means for a holding or locking device which will be presently explained. Depending from the cam disk 76 near the periphery is a roller 83 which is adapted to enter the radial slots 75 of the Geneva or controlling plate 74 and force the said plate around at intervals and correspondingly move the mold wheel or disk 35, the distance of rotation imparted to the Geneva or controlling plate 74 and the mold wheel 35 by the roller 83 of the cam 76 engaging the slots 75 being equal to the distance between the pockets or seats 36 so that a certain number of these pockets will be brought into operative adjacency with other mechanisms and regularly shifted under the shaping plunger 34, the mold wheel or disk 35 as well as the Geneva or controlling plate 74 moving in the direction of the arrow shown by Fig. 1. The roller 83 impinges or bears against the walls of the slots 75 and particularly against the advance wall relatively to the roller, and as the cam disk 76 is rotated it will be seen that the Geneva or controlling plate 74 as well as the mold wheel 35 will be regularly rotated by a step by step operation at intervals and in timed relation to the operating mechanisms of the shaping plunger 34, cigarette feeding mechanism 37, preliminary pasting attachment 38, the folding arm 39, and expelling mechanism 40 for the packages. It will also be understood that the Geneva or controlling plate 74 as well as the mold wheel 35 must be held or temporarily locked against movement after each adjustment or step rotation thereof in order to insure an accuracy of operation of the several mechanisms coöperating with the inclosures or packaging devices held by the several pockets or seats 36, and to accomplish this desirable and necessary result a bell-crank lever 84 is movably suspended from the under side of the table 5 by any suitable bracket means and has two arms 85 and 86 respectively carrying rollers 87 and 88 which are movable with the arms.

The roller 87 of the arm 85 of the holding or locking means for the Geneva or controlling plate 74 and the mold wheel is held in continual engagement with the periphery of the cam disk 76 through the medium of a spring 89 secured at one end to the arm 85 and to an under portion of the table 5 or to any other convenient and accessible point, and the said bell crank lever 84 as a whole is actuated by the cam disk 76 when the roller 87 reaches first depression 81 and the convex edge 82 and then the succeeding like depression 81. When the roller 87 is in engagement with the remaining portion of the periphery of the cam disk 76 concentric with relation to the shaft 77, the bell-crank lever 84 is held in such position that the roller 88 clears the Geneva or controlling plate 74, but as soon as the roller 87 reaches the one depression 81 the bell-crank lever 84 is drawn inwardly through the action of the spring 89 and the roller 88 enters one of the radial slots 75 of the Geneva or controlling plate 74, which will be at that time in position to receive the said roller 88. This engagement of the roller 88 with the adjacent radial slot 75 is effected just as the roller 83 moves to a clearing position relatively to the slot 75 with which it has been coöperating, and the roller 88 of the arm 86 of the bell-crank lever 84 continues to engage the one radial slot 75 to hold the Geneva or controlling plate 74 and the mold wheel 35 against movement while the roller 87 is traversing the convex edge 82 and until the next depression 81 is reached and

passed and the roller 87 runs outwardly onto the remaining peripheral edge of the cam disk 76; and when the said roller 88 moves outwardly onto the remaining periphery of the cam disk, the roller 83 of the cam disk is in position to enter a succeeding radial slot 75 and again move or impart a step rotation to the Geneva or controlling plate 74 and the mold wheel 35. This operation continues regularly throughout the actuation of the entire mechanism so that the mold wheel will be positively actuated at timed intervals. The mold wheel or disk 35 has the inner edge of its rim 35ª clear so that the inner flap of the inclosure, which is caused to project upwardly after the operation of the shaping plunger 34, may move around with the said mold wheel and clear any projecting part of the mechanism. Extending partially around the outer edge or periphery of the mold wheel or disk 35 is a guard 90 which extends from the cigarette feeding mechanism around to the package expelling mechanism 40, the said guard being spaced sufficiently from the outer periphery of the mold wheel 35 to permit the passage between the guard and the mold wheel periphery of the outer extremity or flap of the package. The guard is held in fixed position by brackets 91 secured at intervals to the front portion of the table 5, and as will be understood, the outer flaps or extremities of the packages or inclosing means within the several pockets or seats 36 will be held in an upright position by the guard until the pasting attachment 38 performs its function relatively to each outer flap or extremity.

After the blank of the inclosure or package is shaped by the plunger 34 and pressed into the pocket or seat 36, it is conveyed by the mold wheel or disk 35 to the cigarette feeding mechanism 37. The example illustrated in the accompanying drawings, and particularly Figs. 1 and 4 to 14, inclusive, relating particularly to the cigarette feeding mechanism, shows the said mechanism as operating with a double row of five cigarettes in each row, which constitutes the ordinary package of ten. This feeding mechanism embodies a hopper 92 having a bottom wall shaped as shown particularly by Fig. 7 and comprising a long gradual curve 93 at one side and a short curve 94 at the opposite side, both of these bottom curvatures merging into slight overhanging or inwardly projecting ribs or shoulders 95 and 96 continuing into under curved surfaces 97 and then merging into downwardly inclined converging walls 98 to an outlet opening 99. This hopper may be equipped with any suitable means for gaining access thereto and remains in fixed position on the table 5 to which it is suitably secured. The shape of the bottom of the hopper and the outlet walls as just explained prevents crowding and misshaping the cigarettes by pressure of the bulk above those adjacent to the outlet and insures a more perfect retention of the shape of the cigarettes or their preservation in approximately circular contour in cross-section. Beneath the discharge opening 99 at the base of the hopper 92 a box or casing 100 is located on a portion of the table 5. The box or casing 100 may be held fixed on the table 5 by any suitable means, and is open at its opposite ends and top portion, and therein is a plurality of six sliding bars 101, 102, 103, 104, 105 and 106 which are of such width as to snugly take up the space between the sides of the box or casing 100 but are free to shift or move between the said sides. These bars are mounted in such manner that a differential parallel sliding motion is imparted thereto, and this motion is effected through the medium of a motion transmitting lever 107, the bars at one end of each being formed with a horizontal slot 108, and when the bars are assembled all of the slots 108 coincide, thus forming an elongated seat for the reception of the lever 107. The lever 107 is intermediately fulcrumed as at 109 to one of the bars, as shown bar 104; and the opposite ends of the lever or the portions thereof on opposite sides of the fulcrum or fulcrum pin 109 are constructed with elongated slots 110 and 111, and extending vertically through the slotted ends of the bars are pins 112 which pass through the slots 110 and 111 of the lever 107. The pins 112 are similar to the fulcrum pin 109, said pins terminating at their upper and lower ends coincidently with the upper and lower sides of the several bars 101 to 106 inclusive. The bar 104, or that through which the fulcrum pin 109 extends, may be properly termed the intermediate governing bar, and at one end this bar is provided with a buffer 113 which is preferably spring-actuated, as shown by Fig. 9, to engage an adjustable stop screw 114 in line therewith and carried by an angle arm 115 forming part of the first bar 101, the latter bar being extended beyond the adjacent bars and having the arm 115 carried thereby. As shown by Fig. 5, the buffer 113 is carried by the same bar as shown by Fig. 9 and acts as a stop means or a limiting device for the movement of the slide bars 101 to 106 in one direction. The bar 103, as shown by Fig. 5, carries an extension spindle 116 movable through a suitable goose neck 117, said spindle being screw-threaded and carrying an adjusting nut 118 between which and the inner depending extremity of the goose neck a coiled spring 119 surrounds the spindle and serves as a yielding buffer and also to impart a partial return movement to the group of slide bars. In the form of this

mechanism as shown by Fig. 9, the bar 104 on the end opposite that carrying the buffer 113 is provided with an extension spindle 120 which loosely moves through an angle plate 121 and is provided with an adjusting nut 122, the spindle having a spring 123 surrounding the same between the angle plate and the adjacent end of the bar 104. The first bar 101 is also formed with an outwardly extending bracket or connecting arm 124 for attachment thereto of a connecting rod or lever 125 by which movement is imparted to the whole series of bars.

The slide bars 101 to 106 carry a plurality of upright partitions or walls 126, 127, 128, 129, 130 and 131 which extend transversely thereover, as clearly shown by Figs. 5, 9, 11 and 12. The partitions or walls 126 to 131 engage different portions of the bars and each partition has a depending attaching flange or member 132, as shown by Fig. 13, which fits in a corresponding slot 133 opening upwardly through the upper edge of each bar. The flanges or attaching members 132 and the slots 133 are located in different positions relatively to the several partitions and bars, and considering for example that Fig. 12 shows bar 102 and Fig. 13 illustrates partition 127 attached to said bar, it will be observed that the member or flange 132 stands inwardly far enough from the nearest end of the partition or wall 127 to leave a clearance at the under edge of said partition or wall of such length as to permit the said nearest end of the partition to project over the outermost bar 101 at one side and the upper edge of the adjacent side of the box or casing 100. The flange or member 132 of the wall or partition 126 will be nearer the one end of the said partition or wall as is shown by Fig. 13, and the slot 133 in the bar 101 will be located in advance of the corresponding slot in the bar 102, and so on through the whole series of bars. The flanges or members 132 of the several partitions or walls will gradually increase in their distance as to location from, for instance, the right end of the partition, as shown by Fig. 13, toward the opposite end throughout the series of partitions or walls, and the parts of the partitions or walls on opposite sides of the flanges or members 132 will be loosely disposed over the bars, or in other words the said partitions or walls will be individually attached to the bars and have loose movement with relation to the remaining bars or be free to move over the latter bars. The partitions or walls 126 to 131 remain in upright position at all times or do not tilt either to the right or left, and the end partitions or walls 126 and 131 are respectively formed with upper ledges 132^a and 133^a which extend in opposite directions in planes at right angles to the said partitions or walls and cover the opposite extremities of all of the bars 101 to 106 except the angular extension or elbow 115 of bar 101 and the arm 124 of the same bar. These ledges 132^a and 133^a fit snugly under the base of the hopper on opposite sides of the outlet opening 99 and move with the partitions carrying the same and therefore shift in opposite directions under the hopper and serve to alternately guide or direct the cigarettes into the spaces between the partitions or walls 126 to 131. In the position of the mechanism as shown by Fig. 4, it will be seen that the ledge 133^a is projected some distance into the outlet opening 99 of the hopper and the cigarettes gravitating toward the said outlet opening will rest on this ledge, but when the partition or wall carrying the ledge, together with the corresponding bar of the partition, is shifted toward the left, the cigarettes will be pushed off this ledge and correspondingly the opposite ledge 132^a will move into the outlet opening and receive cigarettes thereon, and said ledge 132^a will be cleared of cigarettes when the bars are moved toward the right or into normal position. As a minute structural advantage the ledges 132^a and 133^a at their points of intersection with the partitions 126 and 131 are formed with regularly curved bends so as to avoid sharp angular corners and also facilitate the movement of the cigarettes downwardly into the adjacent spaces or pockets between the partitions or walls, with material advantage in preserving the cross-sectional contour of the cigarettes. The opposite extremities of the partitions or walls 126 to 131 are fully open for engagement therewith of ejecting means at one side and free liberation by longitudinal movement of the cigarettes at the opposite side, and thus the cigarettes may be readily discharged from between the partitions, and it will be seen that these partitions with the bars carrying the same form an assembling chamber or receiver beneath the hopper. It will also be understood that the number of bars and partitions may be varied to form packages containing more than ten cigarettes or cigars, as the case may be.

When the first bar 101 is drawn to the right by means of the connecting rod or lever 125, the horizontal shifting lever 107 through the pin connection hereinbefore described is similarly moved at the end adjacent to and coöperating with the said bar 101, and the succeeding bars 102 and 103 are moved relative distances in the same direction or toward the left, in accordance with their distance from the fulcrum pin 109, and the bars 105 and 106 are shifted toward the right, the bar 104, through which the fulcrum pin 109 extends or to which the said lever 107 is pivotally attached, remaining for the time being with-

out sliding movement, and by this movement of the bars all of the partitions or walls carried by the bars except that engaging the bar 104 are moved in directions corresponding to the movement of their bars, or the partitions or walls carried by the bars 102 and 103 are moved to the left and the partitions carried by bars 105 and 106 are moved to the right, thereby increasing the spaces between the several partitions proportionately to the distance of movement of the bars carrying the same and permitting the cigarettes to roll down and fill the spaces or pockets between the partitions without crushing or misshaping the cigarettes, sufficient distance being left by predetermined adjustment between the several partitions when the movement thereof takes place to permit the cigarettes to fall easily into the spaces or pockets between the partitions without crowding or undue pressure of the cigarettes, and this increase of space permits the cigarettes to roll relatively to each other and become properly disposed between the partitions. The movement of the bar 101 to the left continues until the stop screw 114 strikes the buffer 113, and when this engagement ensues, all of the bars, including bar 104 to which the lever 107 is fulcrumed, are bodily moved to the left by a continuation of the drawing action on the bar 101 through the medium of the connecting rod 125. This bodily movement of all of the bars is against the resistance of the spring 123, and during such bodily movement the stem 116, as shown by Fig. 4, is drawn through the inner extremity of the goose neck 117 against the resistance of the spring 119, or as shown by Fig. 9 the stem 120 is pushed through the angle bracket 121 against the resistance of the spring 123 and the nut 122 recedes slightly from the portion of the angle plate normally engaged thereby. This bodily movement of the bars varies the position of the partitions or walls under the hopper so that all of the spaces or pockets between the partitions will become properly filled with cigarettes from the hopper and a sufficient agitation or displacement of the cigarettes in the hopper will ensue to maintain the cigarettes in close relation or free exit condition at the outlet of the hopper. This bodily movement is of comparatively short duration and the return stroke of all the bars, which is brought about by the spring 123, causes a settling or jogging action to be imposed on the cigarettes between the partitions and a continual movement toward the right, which will be imparted by the connecting rod 125, will shift or slide the bar 101 toward the right and restore the remaining bars 102, 103, 105 and 106 to normal position and correspondingly shift the partitions so as to assume a closer relation to the cigarettes therebetween and positively hold the cigarettes in rows for practical ejection from the receiver or assembling chamber. The degree of movement of the several bars 101 to 106 may be regulated by adjusting the screw 114 so as to project closer to or at a greater distance from the combined stop and buffer pin 113, and similarly the screw 122 may be adjusted on the stem 120 to vary the bodily movement of all of the bars and the partitions. The adjustment of the screw 114 will regulate the spacing or separation of the partitions 126 to 131. The bodily movement of all the bars and partitions is, as a matter of course, transmitted to the ledges 132^a and 133^a, and the latter are given opposite reciprocating or sliding movements under the bottom of the hopper 92 to alternately receive cigarettes that may fall thereon and cleared of the cigarettes by the opposite lower terminals of the walls of the outlet 99 of the hopper having close coöperation with the said ledges. The connecting rod 125 extends forwardly and is connected to the upper member of a crank arm 126^a journaled on a rod 127^a, see Fig. 2, the lower member of said crank arm engaging a cam 128^a which is suitably grooved or shaped to give the proper motion to the bars 101 to 106 and the partitions carried thereby to preliminarily separate the partitions and then bodily move all the bars and partitions as hereinbefore explained. The cam 128^a is fixed to a shaft 129^a journaled in hangers 130^a and 131^b depending from the under side of the table 5. This shaft 129^a has a sprocket wheel 132^b thereon over which a chain belt 133^b is trained and passes upwardly through the table and also runs over a sprocket wheel 134 on the shaft 11. It will be understood that the chain belt 133^b will be engaged by suitable idlers to keep the parts thereof in proper operating condition.

As a preferred specific detail of construction the box or casing 100 is formed as a part of the table 5 or in a suitable extension of the latter, and it will be understood when the number of bars and partitions is increased the box or casing will be made correspondingly wider or of such transverse extent as to provide for the introduction and operation therein of the additional bars and partitions. It will also be understood that the hopper 92 is slightly greater in width than the standard length of cigarettes, and in placing the cigarettes in the hopper they will be disposed with their ends adjacent to the opposite side walls and by this means they will settle and roll down to the outlet 99 in approximately regular condition or in such position as to be disposed between the partitions 126 to 131 for practical ejection. Incidentally, practice has demonstrated that

with the feeding mechanism as just described the ordinary hopper with the inclined sides causes the cigarettes contained therein to have a tendency to arch over a little away from the ledges 132^a and 133^a, and thus prevent the descent of the cigarettes and outlet into the receiver or assembling chamber below. To obviate this defect it is preferred that one side of the hopper be given a greater inclination than the opposite side, as shown particularly in Fig. 7 so that the movement produced by the feeding mechanism below for the movement and reciprocation of the bars 101 and 106, and the partitions or walls 126 and 130 is effective more directly on the comparatively few cigarettes adjacent to the outlet 99 and below the projections 95 and 96 of the opposite hopper walls. Furthermore, these projections serve to support the weight of the cigarettes above the same and prevent crushing or jamming of the cigarettes on the ledges 132^a and 133^a, as heretofore stated.

The cigarettes in the receiver or assembling chamber are pushed out at regular intervals through the medium of an ejector 135 comprising a plurality of spaced fingers 136 corresponding to the number of spaces between the partitions or walls 126 to 131, these fingers 136 being of such length as to fully push the cigarettes outwardly from between the partitions or walls and of such vertical extent as to engage the two rows of cigarettes of five each between the partitions. The fingers 136 project forwardly from a common web 137 pivoted at its outer end as at 138 on a support or slide 139 mounted in a guide 140 projecting outwardly from the table 5. By pivoting the outer end of the ejector 135, the latter may be drawn over or raised from operative position at times when it may be found necessary to temporarily dispense with the operation of the ejector in order to rectify some slight error in any of the cigarettes, or for any other purpose without stopping the operation of the remaining mechanism. When the ejector 135 is thrown over in an upward direction it may continue to reciprocate as long as desired without performing its ejection function. The ejector 135 is operated by a suitable cam 141 mounted on the shaft 129^a through the medium of a slide bar 142 having an outer forked end 143 loosely movable over said shaft 129^a and also provided with a roller 144 to engage a suitable groove construction in the cam 141. The inner end of the slide bar 142 is provided with a rack 145 to engage a pinion 146 on the lower end of a shaft 147 having bearing in a hanger 148 depending from the table 5, as clearly shown by Fig. 3. On the outer end of the shaft 147 a gear or pinion 149 is secured and disposed in horizontal position and held in continual mesh with the support or slide 139 carrying the ejector, said support or slide 139 having a rack 150. A reciprocating movement is imparted to the slide bar 142 regularly in opposite directions by the cam 141 and through the rack 145 and pinion 146 the shaft 147 is regularly rotated in opposite directions and correspondingly the gear or pinion 149 on the upper extremity of said shaft is reversely rotated and consequently the slide 139 is shifted inwardly and outwardly to move the ejector 135 into and through the receiver or assembling chamber for the cigarettes, and then outwardly to clear the said receiver or chamber to permit the latter to recharge by the operation of the mechanism hereinbefore specified.

It will be understood that the movement of the slide or bar 142 will be intermittent or will take place at regular intervals so that the receiver or chamber under the hopper 92 may be practically charged with cigarettes between the periods of ejection. The inner ends of the fingers 136 squarely strike the adjacent ends of the cigarettes between the partitions or walls 126 to 131 and as the cigarettes are loose between the partitions they will be pushed longitudinally with an easy motion and all equally without the least deviation and are discharged into a pressure chamber 151 as clearly shown by Figs. 1 and 5. The pressure chamber 151 is provided in a carrier frame comprising an inner transverse end wall 152 and a side wall 153 at right angles to the wall 152, the side wall 153 being movable under a guide 154 supported on the table 5 and snugly engaging said wall 153 to prevent too loose movement or displacement of the carrier as a whole out of a true line of travel in accordance with a predetermined arrangement of the several parts embodied in this particular construction. In fact, the top wall of the guide 154 has sufficient frictional engagement with the side wall 153 to render the movement of the carrier at all times accurate. Projecting from the outer end of the wall 153 is a right angular guide or arm 155 forming a bearing as well as a contributing stop projection, and at an intermediate point the bearing arm 156 extends into the receiving chamber. A plunger stem or rod 157 is slidably mounted in the arm 155 and an arm 156, and between the said arms a spring 158 surrounds the rod 157 and is adjustable through the medium of a set sleeve 159 also disposed on the rod 157. The rod 157 has a plunger 160 fixed to its inner end which operates through the reciprocation of the said rod to first slightly compress and closely dispose the cigarettes discharged into the chamber 151 and then bodily move the cigarettes to a point of delivery from the chamber, as will be presently explained. The outer end of the rod 157 has a head 161 secured thereto and movably at-

tached to the head is a connecting rod 162. As hereinbefore stated, the rod 157 is free to reciprocate or slide in the arms 155 and 156 and when the said plunger rod 157 is drawn outwardly and the plunger 160 approaches the arm 156, the head 161 recedes from the outer side of the arm 155, and the rod 157 is given a slight resilient action in view of the spring 158 surrounding the same between said sleeve 159 and the arm 155, and consequently on the return or inward stroke of the plunger 160 a preliminary resilient or yielding operation is given to the said plunger by the spring 158 so as to yieldingly compress the charge of cigarettes in the chamber 151 without unduly forcing the cigarettes or misshaping the same, and this preliminary pressure continues until the inner end of the head 161 abuts against the arm 155, when a continued inward movement of the connecting rod 162 then shifts the entire carrier including the plunger 160 and rod 157 together with the charge of cigarettes to a point of discharge which will be hereinafter explained. The chamber 151 is provided with a bottom wall 163 and the charge of cigarettes is shifted thereover when the carrier moves to a point of delivery or discharge. The carrier is limited in its outward movement or is restricted as to its outward stroke by an adjusting screw 164 held by a suitable angle plate, as 165, or other analogous means, and the said screw 164 is adjustable so as to vary the movement of the carrier in an outward direction in accordance with the dimensions of the cigarettes forced into the chamber 151. The connecting rod 162 is movably attached at its outer end to the upper member of a bell crank lever 165^a mounted on the supporting shaft 127^a adjacent to the inner side of the hanger 131, as shown by Fig. 2, and the lower member of said bell crank 165^a is provided with a suitable roller or analogous means 166 engaging the cam 167 on the shaft 129^a.

It is desired to be understood that the cams 141, 128^a and 167 will all be channeled or grooved to impart to the mechanism with which they directly coöperate a regularly timed operation in accordance with the several progressive steps in feeding the cigarettes, and discharging the latter in regular quantities, and in the operation of the carrier embodying the walls 152 and 153 together with the plunger 160 and rod 157 it will be understood that the cam groove or channel in the cam 167 will be of such contour as to permit the inward yielding pressure movement of the plunger 160 against the cigarettes and also permit said plunger to be slightly drawn outwardly after the slide as an entirety has reached the limit of its outer stroke, and by this means the plunger 160 is always automatically operated to be ready for successive yielding compression strokes in relation to the successive charges of cigarettes delivered into the chamber 151. The charges of cigarettes after compression and close assemblage thereof are regularly moved by the carrier over a discharge table 168 having therein a pocket 169 of such dimensions as to readily receive but hold the cigarettes in the charge in close assembled relation, and at the bottom of the table 168 spring-controlled retaining lips or flaps 170 are located to hold the charge of cigarettes in the pocket 169 with a comparatively small resistance to the expulsion of the cigarettes from this pocket.

The carrier with the charge of cigarettes in moving over the table 168 and pocket 169 at the same time, as shown by Figs. 1 and 2, shifts under a discharging plunger 171 at the lower end of a stem 172 which is adjustably mounted in a forwardly projecting horizontally disposed arm 173, said arm 173 being secured to the lower extremity of a vertical reciprocating rod 174 having a closed yoke 175, see Fig. 28, reciprocatingly mounted over the shaft 11 and carrying a roller 176 at its upper extremity which engages the groove of a cam 177 secured to the said shaft 11. The horizontal arm 173 while being held rigidly in a horizontal plane reciprocates equally with rod 174, and this arm is adjustable on the said rod, and for the purpose of conveniently adjusting the same a vertical socket 178 is provided at the rear end of said arm to receive the lower end of the rod 174, the socket 178 being held in fixed adjustment by means of a suitable set screw 179, as shown by dotted lines in Fig. 2. By adjusting the arm 173, the vertical movement of the discharging plunger 171 may be regulated to accommodate the bulk of the charges of cigarettes with which it coöperates or to render it effective in operation with cigarettes that may have variations in diameter.

As hereinbefore explained, the retaining flaps or lips 170 located at the opposite ends of the discharge pocket 169 hold the cigarettes up until they are released or discharged by the plunger 171, and said plunger moving downwardly engages the top row or layer of the cigarettes and forces the charge bodily through the pocket 169 into the inclosure in the pocket 36 of the mold wheel 35, which will then be located immediately below the table 168. After this discharge of the cigarettes has been effected through the table 168 the plunger 171 immediately rises or is moved upwardly through the medium of the mechanism for operating the same, and the carrier embodying the plunger 160 recedes or moves outwardly and the chamber 151 is cleared for a subsequent charge of cigarettes, when the same operation will be carried out and continued successively and all the charges of the cigarettes

delivered into the chamber 151 from the receiver or assembling chamber under the hopper 92. As shown by Figs. 6 and 7, the discharge plunger is connected to and moves with the carrier, and connected to and movable with the carrier is an upright 180 having the yoked end 181 supporting a roller frame 182 in which a roller 183 is centrally mounted, and in this instance the discharging plunger 184 is disposed in an enlarged inclosure 185 which forms a receiving chamber for the successive charges of cigarettes, and rising from the said plunger is a stem 186, said stem 186 projecting upwardly through the center of the yoked extremity 181 of the upright 180 and operatively associated with the roller frame 182. The discharge plunger 184 may be held in normally elevated position by a spring, as at 186^a, and the inclosure 185 moves over a table 187 having a pocket 188 therein similar to that shown by Figs. 1 and 2 and provided with spring-actuated retaining flaps or lips 189, the charge of cigarettes being discharged through the table 187 into one of the pockets 36 of the mold wheel below. When the inclosure 185 with the plunger 184 therein rides over and coincides with the pocket 188 of the table 187, the roller 183 engages with the forward extremity of a depressing arm 190 adjustably mounted on a vertical reciprocating rod 191 which corresponds to the rod 174, shown by Figs. 2 and 28, and having a similar operation through the medium of the cam 177 heretofore described. When a proper registration of the inclosure 185 over the pocket 188 is accomplished, the arm 190 immediately descends and presses on the roller 183, and stem 186 together with the plunger 184 are depressed to expel the charge of cigarettes. After the discharge of the cigarettes has been effected, the arm immediately rises, the stem 186 and plunger 184 resume their normal positions, and the carrier with the plunger and stem as well as the inclosure 186 recede or move outwardly ready to take another charge of cigarettes from the receiver or assembling chamber under the hopper 92.

The discharge plunger and its operating means may be indefinitely varied or modified. While it will be seen that it is only necessary to have the plunger operate at proper intervals to depress and discharge or expel the successive charges of cigarettes into the mold wheel or inclosures carried by the successive pockets of the latter, and while it is preferred to use a horizontally disposed mold wheel, it will also be understood that the same mechanism might be adopted in connection with a vertical mold wheel or any other analogous device for receiving charges of cigarettes at timed intervals.

The mold wheel carrying the filled inclosures moves adjacent to the preliminary pasting attachment 38 when it is desired to positively secure the inner and outer extremities of the inclosure blank over the charge of cigarettes to complete the package or to produce a sealed package. This pasting attachment is secured to the front edge of the table 5 and comprises a paste holding trough or receptacle 192, as more clearly shown by Fig. 22, and in the upper portion of this trough a shaft 193 is mounted and carries a paste elevating roller 194 constructed of suitable material. On the shaft 193 a feed ratchet 195 is secured and outside of the feed ratchet a hand wheel 196 is mounted on the same shaft. Between one end of the paste elevating roller or wheel 194 and the feed ratchet 195 and extending upwardly from the shaft 193 is a swinging upright 197 carrying a feed dog 198 which is held in engagement with the feed ratchet 195 by a spring 199 extending downwardly and secured to the trough or receptacle 192. A check dog 200 is mounted on the side of the trough or receptacle 192 adjacent to and held in continual engagement with the said ratchet 195, so as to insure a forward step by step or interval rotation of the roller or wheel 194 to regularly elevate paste from the trough or receptacle 192 for engagement by the pasting finger which will be presently explained. The upright 197 is given a resistance to movement by a suitable friction device engaging the shaft 193 to insure proper operation of other devices coöperating therewith. On the upper end of the upright 197 a swinging arm 201 is mounted, and pivoted as at 202, a pin 202^a being projected on one side of the upright 197 and loosely engaging a segmentally slotted controller extension 203 which is formed as part of the arm 201 and is carried at the outer portion of the lower extremity of the latter arm. The inner part of the lower extremity of the arm 201 slightly depends and is deflected at a right angle in an approximately horizontal plane as at 204 and continues into a depending finger 205 terminating in a horizontal wiper extension 206 preferably formed with a convex edge 207 to engage the periphery of the roller or wheel 194 and also having a paste delivering function which will be presently explained. Secured to the intermediate portion of the arm 201 by a suitable fulcrum means is the outer end of a connecting rod 208 which extends at an elevation over the mold wheel 35 and embraces the drive shaft 11, the said connecting rod carrying a roller 209 held in continual engagement with a cam 210 fixed on the said drive shaft, and secured to the said connecting rod 208 and an adjacent portion of the upright 9 is a spring 211 which operates to draw the rod downwardly and rearwardly so as to main-

tain a practical association or engagement of the roller 209 with the cam 210. By means of the rod 208, roller 209 and cam 210, the arm 201 is reciprocated to alternately bring the finger 206 into engagement with the periphery of the paste elevating or feeding roller or wheel 194 and to throw said finger inwardly to a point adjacent to the periphery of the mold wheel. When the arm 201 is drawn inwardly a predetermined distance, the outer end or wall of the slot of the controller 203 engages the pin 202^a and as a consequence the upright 197 is moved inwardly with the arm 201 and actuates the feed ratchet 195 through the medium of the dog 198 and thereby brings up a new paste carrying surface or portion of the periphery of the roller or wheel 194 into position for subsequent engagement by the finger 206. By the outward movement of the connecting rod 208, the upright 197 is restored to normal position and the arm 201 is again swung downwardly and outwardly until the finger 206 engages the periphery of the paste feeding roller or wheel 194. At the inner end of the trough or receptacle 192, a support 212 is mounted and has a convex cavity or seat 213 in the center of the upper edge thereof. In advance of this support a blade spring 214 is suitably secured close to the periphery of the mold wheel 35 and in position to be depressed into the cavity 213 of the support 212. As the outer flaps or extremities of the inclosures for the cigarettes move around with the mold wheel 35 they are held upright by the guard 90, as hereinbefore explained, and each flap or extremity on arriving at the preliminary pasting attachment just described stops in engaging position with relation to the blade spring 214, and when the finger 206 moves inwardly and descends to its full stroke it is over and in engagement with the inner side of the flap or extremity and in wiping the said flap or extremity the finger 206 presses the same against the blade spring 214 and the latter yields, the said blade spring having the function to give the flap receiving the paste sufficient resistance to permit the paste through the movement of the finger 206 outwardly thereover to be evenly or positively applied in such quantity as to render the pasting operation or closure of the outer flap effective when the package is sealed or is subjected to the several sealing steps. After the pressure of the finger 206 is released from the outer extremity of the flap of the closure of the cigarettes and the blade spring 214, both of the latter devices rise to normal position and immediately the finger 206 through the devices hereinbefore explained moves outwardly and eventually is brought into contact with the feed wheel 194 having a new supply of paste thereon.

It will be understood that the upright 197 may be provided with suitable means to facilitate the restoration thereof to normal position, and the trough or receptacle 192 will have an adjusting screw 215 inserted in the outer end thereof which engages a scraper plate 215^a having its inner end adjacent to the wheel 194 to regulate the amount of paste fed upwardly from the trough 192 by the wheel or roller 194.

From the preliminary pasting attachment the package or inclosure in its partially completed condition is moved by the mold wheel 35 to the folding arm 39. This folding arm is mounted to reciprocate in guides 216 disposed radially over and close to the mold wheel or disk 35 and extends from a center post or upright 217. The folding arm 39 is preferably of the contour in cross section shown by Fig. 27, and the said arm operates in a true ralial line with relation to the mold wheel. On the outer end of this arm 39 is a transversely extending folding blade 218 which is of such length as to fully engage the inner upstanding flap or extremity of the inclosure in the pocket 36 brought around into operative alinement with relation to the said folding arm, and as shown by Fig. 27 the outer edge of the folding blade 218 is flared upwardly so as to engage and regularly fold and move over the inner extremity of the flap of the inclosure for the cigarettes without liability of tearing or injuring the said flap. The opposite extremities of the blade 218 bear upon the upper surfaces of the side walls of the several pockets 36 and the inner extremity or flap of the closure is thus fully engaged and pressed downwardly over the cigarettes and ready for the subsequent operation of inwardly folding and securing the outer flap or extremity over the inner flap or extremity. On the inner portion of the arm 39 is a rack 219 which is held in continual engagement with a pinion 220. The pinion 220 is fixed on the lower end of an upright shaft 221 rotatable in upper and lower bearings 222 and 223 carried by the post or upright 217, and on the upper end of the shaft 221 is a guide 224 held by a fixed arm or offset 225, and into this guide projects the upper end of the shaft 221 having thereon a pinion 226. Opposed to the pinion 226 and spaced therefrom is an antifrictional roller 227 which is also disposed within the guide 224. The outer end of the reciprocating rod or motion transmitting means 228 is mounted in the guide, and said rod is provided with a rack 229 which is held in continual mesh with the pinion 226, the one side of the outer extremity or end of the rod 228 bearing on the antifrictional roller 227, and by means of the latter a positive engagement of the rack 229 with the pinion 226 is effected. The rod 228 extends rear-

wardly and has a rear forked or slotted extremity 230 loosely embracing the shaft 11, and on this rod is fixed a roller 231 which is held in continual engagement with a cam 232 secured to said shaft 11 and of such shape as to alternately force the rod 228 outwardly and permit rearward movement thereof, the rod 228 having also a spring 233 secured thereto and to a portion of the upright 9. This spring 233 not only operates to hold the roller 231 in close engagement with the cam 232, but also assists in drawing the rod 228 rearwardly when the portion of the periphery of the cam engaging the roller permits such movement. It will be understood that the cam 232 will be so shaped as to force the rod 228 outwardly, and through the pinions 226 and 220 and the shaft 221 the arm 39 will be positively moved outwardly in its guide 216 to cause the plate 218 to engage the inner flap or extremity of the cigarette inclosure and fold the same downwardly over the cigarettes. The reverse movement of the rod 228 or toward the rear and which is fully accomplished through the spring 233 will operate the mechanism just described in reverse direction and withdraw the folding arm 39 and its folding blade 218 sufficiently to clear the rim 35ª of the mold wheel 35.

Extending from the package expelling or discharging mechanism 40 outwardly over the mold wheel or disk 35 is a curved folding plate 234 having an outer upwardly flared corner or edge 235, this plate being held by a bracket arm 236 secured to the table 5. The purpose of this plate 234 is to draw the outer flap or extremity of the inclosure for the cigarettes inwardly and downwardly over the inner folded flap or extremity of the inclosure, and both flaps or extremities pass under the plate 234, and such pressure is exerted thereon as to effect a retention of the two flaps or extremities and cause the outer pasted flap or extremity to adhere to the inner flap or extremity. As hereinbefore explained, the blade 218 at the outer end of the folding arm 39 moves over the inner flap or extremity, and the side portions of the inner flap or extremity which project over the opposite sides of the inclosure for subsequent infolding and securement, if the package or closure be of this type, are spread out flat on the rim 35ª at opposite sides of the pocket in which the inclosure is located, and when the partially completed inclosure for the cigarettes passes under the plate 234 the side projections or final closing folds of the inclosure are ready for subsequent operation or completion of the inclosure, which takes place in the final expelling or discharge mechanism for the inclosure or package.

The package expelling or discharging and completing mechanism involves a number of instrumentalities or coördinate devices. An elongated guide bar 237 extends from a point about the center of the table 5 outwardly toward the expelling or discharge end of the machine and has its inner end secured to the base of the upright or post 217 and its outer end fixed to a suitable portion of the table 5. The bar 237 is longitudinally straight, and freely movable thereon is a slide 238 embodying an outwardly projecting expelling arm 239 of such contour as to have a snug sliding movement through the several pockets or seats 36 in the rim 35ª of the mold wheel 35 and is formed with an upwardly projecting head 240 which is inclined from its outer toward its upper end, the outer end being reduced and being at such a level as to ride over the top portion of each pocket or seat 36. As shown by Fig. 2, the lower reduced end 241 of the head 240 is flared upwardly so as to give the same a clearance with respect to the inclosures or packages held within the several pockets or seats 36. The arm 239 also embodies a pressure member 242 depending from the center of the head and so shaped in cross-section as to conform to the longitudinal contour of each pocket or seat 36 in which it moves in expelling the inclosure or package therefrom, the front end of the member as at 243 being square or straight to engage positively with the inner end of each inclosure or package. The slide 238 has a link 244 connected to the top thereof and also to the outer end of an actuating arm 245 which has at its rear end an angularly disposed cross-head member 246 which is fulcrumed to a rear post 247. The cross-head member 246 is formed with a longitudinal slot 248, and therein an eccentric block 249 is slidably mounted, said block being eccentrically carried by a horizontally disposed gear 250 mounted on a stud 251 secured to the table 5. Meshing with the gear 250 is a drive gear 252 secured on the shaft 77 which carries the cam 76, and by this means the said gear 250 is regularly driven in a proper direction and the cross-head member 248 with its arm 245 is reciprocated inwardly and outwardly through the eccentric block 249 and such motion imparted by the link 244 to the slide 238 to move the arm 239 with its parts outwardly and inwardly at timed intervals relatively to the operation of the remaining mechanism heretofore described. On the table 5 in line with the plane of movement of the expelling arm 239 of the slide 238 the package or inclosure completing and final discharge mechanism is located. This latter mechanism embodies a straight guide or way 253 comprising opposite side members 254 which partially overhang the way at their upper edges and also have side walls which are curved downwardly and in-

wardly in a suitable manner, as at 255, to infold the projecting side folds or members of the flap or extremity which is turned in by the blade 218 and folding arm 39 and over which the outer flap or extremity of the package or inclosure is secured. These side folds at the top of the package or inclosure are forced outwardly into the inner end of the way 253, and the space between the side walls, as indicated by dotted lines in Fig. 1, is sufficient to allow the outstanding horizontally disposed side folds at the top of the package to pass into the way, but when the curved portions 255 of the walls are reached, these side members are drawn inwardly and downwardly. Previous to the inward and downward movement of the side members projecting from the top of the package or inclosure, paste or adhesive substance is applied to the said members by the mechanism shown in dotted lines by Fig. 1, partially in full and dotted lines by Fig. 2, and in section by Fig. 14. On the under side of the table 5 a bracket 256 is secured, and journaled therein is the outer end of a shaft 257 having a miter gear 258 thereon meshing with a corresponding miter gear 259 on the lower end of shaft 77. It will be understood that the bracket 256, as shown by dotted lines in Fig. 1, will have sufficient extent to provide a positive bearing or support for the shaft 257, and on the said shaft a sprocket wheel 260 is also keyed and has a chain belt 261 trained thereover and over an outer sprocket wheel 262 in alinement therewith and secured on a shaft 263 held by a suitable bearing or bracket 263ª also attached to the under side of the table 5, as shown by Fig. 18.

The shaft 263 is a short or stub shaft, and on the end thereof opposite that carrying the sprocket wheel 262 is secured a sleeve 264 having a projecting arm 265 with a coupling device or pin 266 which is engaged with an arm 267 of a sleeve 268 secured on the adjacent end of a power transmitting shaft 269 having bearing in the opposite sides of a trough or receptacle 270 in which a quantity of paste or adhesive substance is introduced, the shaft 269 extending transversely through the trough or receptacle 270 and operating paste or adhesive substance transmitting and applying devices. On the shaft 269 adjacent to the rear side of the trough or receptacle 270 a gear 271 is also secured, and within the trough and also fixed on the said shaft 269 to rotate with the latter are paste or adhesive substance elevating disks or wheels 272 which rotate in the direction of the arrow shown by Fig. 14. The upper outer portion of the trough or receptacle 270 is provided with a horizontal table or ledge 273 to provide an outer supporting flange 274 and an inner guard 275, the said guard preventing the paste or adhesive substance from splashing out or being thrown from the outer extremity of the said trough or receptacle 270. On the table or ledge 273 a wiper plate 276 is adjustably mounted and at its inner end is suitably slotted to permit the upper portions of the paste elevating disks or wheels 272 to rotate therethrough, the inner slotted extremity of the said wiper plate operating to relieve the disks or wheels 272 of a surplus amount of paste or adhesive substance and maintain the said disks or wheels in better working condition by avoiding an accumulation of paste thereon that might otherwise gradually increase and become troublesome and cause the upper portions of the disks or wheels above the plate 276 to carry too much paste for the final paste delivering means which will be presently explained. The table or ledge 273 is slotted, as at 277, and therethrough projects an adjusting pin or clamping screw 278, and the outer end of the plate 276 is formed with downwardly projecting lugs or ears 278ª to receive combined adjusting and set screws 279 extending therethrough and engaging lugs or ears 280 depending from the outer flanged portion 277 of the table or ledge 273, and by this means the plate 276 may be adjusted inwardly or outwardly as may be desired and found necessary and the adjusted position thereof maintained by setting the screws 279. The back or inner extremity of the trough or receptacle 270 extends upwardly as a rear shield, as at 281, and continues into an upper forwardly projecting curved bearing extension 282 in which an upper shaft 283 is mounted having on its rear end a pinion 284 which meshes with a motion transmitting pinion 285 held on a suitable stub shaft 286 on the rear side of the trough or receptacle 270 which is extended upwardly as at 287 to provide a support for the said stub shaft. The pinion 285 is held in continual mesh with the gear 271 and by this means the shaft 283 is rotated and given a very rapid speed by reason of the reduced dimensions of the pinions 285 and 284 relatively to the gear 271. Through the medium of the interposed pinions 285 and 284 between the gear 271 and the shaft 283, the latter is given the desired rotation relatively to the shaft 269 and the paste elevating disks or wheels 272. On the shaft 283 narrow paste applying disks 288 are mounted and held in continual engagement with the disks or wheels 272, the paste applying disks 288 extending upwardly through and rotating in slots 289 in the table 5 within the sides of the way or guide 253, as clearly shown by Fig. 18. As hereinbefore specified, the side members or folds of the inner extremity of the inclosure or package remain in horizontal position, as at 290, see Fig. 18, when

they enter the way 253 in such position until they reach the curved portions of the side walls 254 which are located in advance or outwardly from the positions of the paste applying disks 288. The disks 288 project upwardly far enough into the way 253 to crowd or press the members or side folds 290 upwardly against the overhanging flanges at the opposite sides of the top of the way 253 and at the same time apply a streak or line of paste to the inner sides of the said members or folds at an intermediate point relatively to the latter, but throughout the full length of said members or folds. As the inclosure members or side folds 290 are receiving paste from the disks 288, their front extremities engage the inwardly and downwardly curved portions 255 of the way or guide 253 and are gradually turned inwardly and downwardly close to the opposite sides of the inclosure or package and are pressed in this position by an outer narrowed portion 291 of the way or guide 253, as shown by Fig. 1, and continue to progress outwardly through the said way or guide for a subsequent stacking and drying operation which will be hereinafter explained.

The trough or receptacle 270 has a lower inclined securing base 292 forming a part thereof and provided with a bottom dovetail rib 293, as clearly shown by Fig. 18, the said rib slidably engaging a dovetail groove 294 formed in an inclined angle support 295 secured to the front wall of the bracket 256, the base 292 of the trough being held in fixed position by a suitable screw 296 extending through the lower depending extremity of the angle support 295 and the lower end of the said base. By releasing the screw 296 to disengage the base 292 and also release the pin 266 of the arm 265 from the arm 267, the entire pasting attachment may be readily removed from the machine without disorganizing the remaining parts of the latter or in the least interfering with the operation thereof. This pasting attachment as well as the preliminary pasting attachment 38 may be readily detached from the machine when inclosures or packages are formed which do not require pasting operations performed in connection with the parts thereof, especially in view of the fact that the present machine is adapted to be used with various kinds of inclosures and have additional structures applied thereto in place of other mechanisms that have been described and will be hereinafter referred to to accommodate inclosures such as boxes, slides and shells, so that by means of one machine capable of having modified attachments applied thereto, cigarettes or other analogous devices may be inclosed or packaged in bulk in predetermined numbers in various kinds of inclosing means and the same general driving and actuating mechanism as well as inclosure shaping devices and pressure accessories for charging or filling the inclosures may be used or remain intact in the machine. It is obvious that such a provision will greatly increase the scope of operation of the machine relative to the production of various cigarette packages. On the end of the table 5 where the way or guide 253 is located, an extension table 297 is secured in such manner that it may be readily removed, and the way or guide 253 extends outwardly over a portion of said extension table, as clearly shown by Fig. 14. The extension table 297 has an opening 298 formed therein with the inner wall of said opening coincident with the outer extremity of the way or guide 253, and reciprocatingly mounted in the said opening 298 is an elevator 299 forming the movable bottom of a stack 300. The inner side of the stack 300 has an opening 301 formed therein to provide an inlet which opens to the way or guide 253 so that when the inclosures or packages are moved in the guide they pass through the opening 301 into the lower portion of the stack 300 and directly on the elevator or movable bottom 299, the latter having its upper surface normally in the same plane as the bottom of the way or guide 253. The extension table 297 is formed with depending sides 302 which terminate in lower bearings 303 in which a shaft 304 is mounted, and said shaft 304 is extended at the rear side of the said table extension 297 and has thereon a sprocket wheel 305 with a chain belt 306 trained thereover and running from a sprocket wheel 307 on the shaft 263 which also operates the pasting mechanism by a separable coupling means or clutch engaging the shaft 269, as hereinbefore explained. It will therefore be seen that the pasting mechanism controlled in its operation by shaft 269 may be detached without interfering with the continuous operation of shaft 263 to drive the shaft 304. On the shaft 304 a cam 308 is secured; and engaging a suitable groove formed in this cam is a roller 309 carried by a depending stem or web 310 of the elevator 299, the said stem or web being slotted as at 311 to permit the upper portion of the cam to move therethrough. The stem or web 310 constitutes a depending guide plate for steadying the movement of the elevator 299 and has its opposite edges engaging grooves 312 in opposed guides 313 depending from the table extension 297, as clearly shown by Fig. 15. The cam 308 through the medium of the roller 309 vertically reciprocates or oscillates the elevator 299 at intervals, and when the said elevator reaches the dotted line position shown by Fig. 14 it closes the inlet opening 301 to the stack 300, said elevator 299 hav-

ing a depending side flange 314 for this purpose. The stack 300 extends a considerable height above the table extension 297 and embodies separable side members which are automatically operated at intervals to expand and contract so as to permit the stacked packages or inclosures therein to settle on top of each package or inclosure pushed upwardly by the elevator 299, the parts of the stack being so assembled that the lower portion thereof will first expand and subsequently the upper portion of the stack will be similarly expanded so that the weight of the stacked packages or inclosures will settle easily and without jarring or crushing effect all the way up through the entire height of the stack. The interval between the expansion at the bottom of the stack and the similar movement at the top of the stack is very short and will be effected in a rapid manner so as to attain the desired result without undue pressure being exerted on the stacked packages.

To one side of the stack 300 a vertical shaft 315 is mounted and has thereon upper and lower horizontally disposed cams 316 and 317, as clearly shown by Figs. 23 and 24. The cam ways of the cams 316 and 317 are so disposed relatively to the shaft 315 that the operation of expanding the stack as above set forth will be regularly carried on, and on an adjacent fixed side member 318 of the stack, crank arms 319 and 320 are fulcrumed and each has a roller 321 on its rearwardly projecting arm or member extending over its cam. The crank arms 319 and 320 are free for vertical oscillation or movement by the action of the cams 316 and 317, and the forward extremities of these arms are angularly disposed, as at 322, and extend upwardly above the fulcrums of the crank arms and terminate in contact heads 323 which engage lugs or projecting plates 324 extending outwardly from the loose member 325 of the stack. The members 318 and 325 of the stack 300 are separated in diagonal planes, or each member embodies two sides disposed at right angles to each other, as clearly shown by Fig. 16, and the advantage of this diagonal separation of the two members 318 and 325 is to give to the packages or inclosures within the stack 300 a proper shaping support at all times and also to impose thereon a regular pressure, both longitudinally and transversely, through the medium of each two sets of fixed sides of the stack and thereby avoid misshaping the packages or inclosures within the stack by the movements of the parts of the latter, especially when contraction ensues, after the introduction of each package or inclosure into the bottom of the stack and when the elevator or platform 299 has receded or depressed to the position shown by Fig. 14 ready to receive a further package. The sections or multiple angle sides 318 and 325 of the stack 300 exert a holding pressure on the packages or inclosures when the latter are pushed upwardly into said stack by the compression exerted on the packages or inclosures, and there is, therefore, always a clearance at the bottom of the stack for the introduction of a package or inclosure from the way 253. The fixed section or multiple angle sides is secured to the extension 297 of the table 5 by any suitable means, and the multiple section 325 is separable therefrom without interfering with the adjustment of the pressure exerted thereon through the devices which will be presently explained for any purpose that may be desired. Upper and lower guides 326 are secured on the fixed multiple side 318 as clearly shown by Figs. 16 and 17, each guide 326 being fulcrumed on a boss or casting 327 similarly positioned relatively to the section 318 and at an angle to the latter. This boss or casting 327 is duplicated adjacent to the rear corners of the section 318, and as shown by Fig. 1, one boss or casting is longer than the other so as to compensate for the angle relatively to the stack of this boss or casting supporting means and to properly position the devices that coöperate with the said guides 326. Within the guides 326, rods 328 are slidably mounted, one in each guide, said rods being provided with adjusting nuts 329 and surrounded by springs 330 which are controlled as to their resistance by the adjustment of the nuts 329, the springs being interposed between the nuts and the adjacent ends of the boss or castings 326. These springs 330 exert a tension on the section 325, and when the crank arms 319 and 320 with their rollers 321 are actuated by the cams 316 and 317 to open the section 325 relatively to the section 318, the opening movement of said section 325 is carried on against the resistance of the springs 330 which also tends to draw the section 325 into closed position when released by the crank arms. Each rod 328 has a bifurcated locking head 331 in which is mounted a locking cam 332 having a square or abutting face 333 to bear against an upstanding lug or keeper 334 which is preferably slotted to receive the head 331 as shown by Fig. 17. When the locking cam 332 is turned down as shown in full lines, the locking face 333 thereof bears positively against the slotted lug or keeper 334 and movement of the section 325 relatively to the section 318 in the expansion and contraction operations hereinbefore explained then ensues by the rods 328 being drawn on guides 326 against the resistance of the springs 330. When it is desired to completely separate the section 325 from the

section 318 to gain access to the parts of the stack as a whole, the locking cam 332 is drawn upwardly so as to release the face 333 from the lock or keeper 334 as indicated by dotted lines, and thus relieve each rod 328 of spring pressure and permit the rod to be swung with the guide 321 on the fulcrum 335. When the section 325 is again assembled with the section 318, the rods 328 are drawn downwardly and the locking cams 332 are caused to assume the position shown in full lines, and as a consequence said separable section 325 is again yieldingly associated with the section 318 or will always be restored to normal position by the springs 330 under the expansion and contraction operations for the purpose of releasing the inclosures or packages within the stack.

The shaft 315 extends downwardly through the extension 297 of the table 5 and carries a gear or pinion 336 on its lower end which meshes with a corresponding pinion 337 on the shaft 304. The shaft 315 projects upwardly slightly above the top of the stack 300 and carries thereon a clearing or tappet arm 338 which is so shaped as to have its free end 339 strike the central portion of each inclosure or package and push the latter off of the top of the stack when it has arrived at an elevation of clearance relatively to the upper end of the stack, and from the stack the package or inclosure is moved onto a suitable support of any character desired, such as a table or a shelf that may be held elevated or may be disposed adjacent to the upper end of the stack. No means has been shown for receiving packages from the stack, as it is proposed to use various devices according to the desire of the user of the machine.

It will be understood that the stack will be of such vertical extent or height as to insure a complete drying of a package or inclosure that has been supplied with paste before liberation from the upper end of the stack, and the pressure exerted on the several packages or inclosures in the stack while the latter are in regular vertical alinement or superposed positions, causes the said packages or inclosures to have their flaps properly held in place while drying and the packages preserved in the shape desired, especially in view of the multiple fixed sides of the sections 318 and 325 of the stack, and as the packages or inclosures will be subjected to pressure on all sides during their movement upwardly through the stack perfectly tight joints will result wherever the paste or adhesive material has been applied to the parts of each package or inclosure, and furthermore, a finished appearance is imparted to the packages or inclosures due to their corners or edges being truly squared by the pressure exerted in the stack.

It will be understood that the cycle of operation as just explained in regard to the stack will be regularly repeated or carried on without requiring manual attention so far as the operation of the elevator 299 and the stack 300 are concerned, and when desired, the table extension 297 carrying the stack together with the shaft 304 and its operating devices, may be removed from the table 5 and other modified package completing and finishing means may be substituted therefor in the manner which will be hereinafter more fully explained.

From the foregoing, the operation of the machine thus far described will be readily understood. The blanks which may be of thin or thick paper and be supplied with a lining such as tinfoil or other material, will be regularly fed inwardly through the chute or guide 45 by the belt 41 and each blank will be accelerated in its movement by the rollers 60 and 60^a and regularly fed under the shaping blank 34 and compressed into the adjacent pocket or seat 36 of the mold wheel or disk 35 and through the step by step rotation of the said mold wheel the blanks as thus shaped will be carried around to the cigarette supply mechanism 37 where a charge of cigarettes is inserted in the package or inclosure and by a subsequent movement of the mold wheel the outer flap or extremity of the package is brought into operative position relatively to the preliminary pasting attachment 38, and supplementally the folding arm 39 with its plate 218 operates on the inner flap or extremity of the package or inclosure and then the package or inclosure with the downwardly folded inner flap passes under the folding plate or device 234 and both flaps or extremities are closely infolded and then moved to and are operated upon by the package expelling and feeding mechanism 40 and finally delivered in the stack 300. At the time that the shaping plunger 34 descends the discharging plunger 171 at the same time descends and the expelling arm 239 moves outwardly, these operations together with the incidental operations of preliminarily pasting and then folding the parts of the package or inclosure being carried on at each interval of rest of the mold wheel or disk 35, so that, for instance, as one package or inclosure is shaped and then folded, another package or inclosure which has been operated upon by the subsequent mechanisms is expelled and completed and fed to the stack 300, and thereby a regular cycle of operations on the packages or inclosures is effected without the least interruption or interference of one operation with another, and by this means cigarettes or other devices may be expeditiously inclosed and packages thereof produced in commercially vendable condition. At the time that the mold wheel or disk 35

is operating, or after each package or inclosure has been charged with cigarettes or other devices, there may be introduced into the open package or inclosure a coupon, advertising card, or other device prior to the package reaching the preliminary pasting attachment 38, during the interval of rest of the mold wheel or disk 35.

As hereinbefore indicated, the machine equipped includes various mechanisms for supplying the charges of cigarettes and also for expelling and completing the packages or inclosures, but in the main the operating mechanisms including the drive shaft 11 and gear motion transmitting means hereinbefore explained are preserved in the machine. In forming packages where pasting is unnecessary, the preliminary pasting attachment 38 is detached from the table 5, and also the extension 297 and parts carried thereby including the stack 300 and the final pasting mechanism under the extremity of the table 5 which is located adjacent to said stack as shown by Fig. 2. In place of the cigarette supply mechanism 37, it is proposed at times to use devices for feeding predetermined numbers of cigarettes or other articles inclosed in packages from a source of preliminary preparation and deliver these partially inclosed charges of cigarettes to a supply means illustrated by Figs. 32, 33, 34, 35 and 36. This modified supply mechanism comprises an auxiliary table 340 which is detachably secured by suitable means to the cigarette feed extremity of the table 5. The auxiliary table 340 is suitably strengthened by ribs on the under side thereof and is fitted up close to an upright 7^a which is provided with additional structures, as will be presently explained, to accommodate the application of the modified organization for feeding preliminarily prepared charges of cigarettes or other articles. The outer end of the auxiliary table 340 is formed with a slot 341 and below the slot are suitable bearings 342, as shown by dotted lines in Fig. 32, for the shaft 343 of a belt roller or sprocket 344 over which the inner extremity of a carrier belt 345 is trained and extends outwardly any suitable distance from the machine to a source of preparation and supply of the packages of cigarettes which are fed inwardly to the table 340. The inner end wall of the opening or slot 341 overhangs a portion of the roller or feed sprocket 344 as at 346, so that the preliminarily prepared charges of cigarettes as fed inwardly by the carrier belt 345 will move onto the table without obstruction or meeting with any resistance, and in line with this overhanging portion of this inner end wall 346 of the slot or opening 341 is a guide 347 for the charges of cigarettes. It will be understood that the guide 347 may be of any suitable length, or of sufficient extent to hold several partially inclosed charges of cigarettes at one time in endwise relation. The feeding pressure exerted by succeeding charges of the cigarettes as fed into the guide 347 by the belt 344 regularly effects a pushing action on the innermost charge, and in this modified form of cigarette supply a carrier is used which is to all intents and purposes similar to the discharge table 168 hereinbefore specified, and also in this instance the carrier has a reciprocating movement. In addition to the upright 7 heretofore described, the supplemental upright 7^a is used, and has a horizontally disposed slot 348 formed therein; and on the inner side of the base of the upright 7^a a dovetailed groove 349 is also provided, the slot 348 opening into the rear portion of this groove. In the groove 349 a dovetailed slide 350 is mounted to move regularly in a horizontal plane and has a stud 351 secured thereto and projecting through to the outer side of the upright 7^a and movable in the slot 348 at the rear portion of the said upright 7^a. Connected to the stud 351 is the lower forked end 352 of a depending arm 353 of a bell crank 354 fulcrumed against the outer side of the upright 7^a and at the upper end of the latter, the said bell crank 354 having a rearwardly projecting arm 355 with a roller 356 on the free end thereof in engagement with a suitable groove in a cam 357 which is also keyed or secured to the drive shaft 11.

By means of the bell crank 354 and cam 355 the slide 350 is alternately reciprocated outwardly and inwardly in proper timed relation to the movement of the mold wheel 35, and the outer extremity of the said slide 350 is formed with an inwardly projecting arm 358 which is secured to or forms a part of the horizontally disposed carrier or charge conveying means. The carrier or charge conveying means is formed with an opening or pocket 359 extending therethrough and having an outer inlet 360 with its front end terminating at the rear extremity of the inwardly projecting guard or stop arm 361 which moves across the plane of the inner extremity of the guide 347 and temporarily holds the charges of cigarettes against movement until the carrier 358 is in position to receive the successive charges or has its inlet 360 in alinement with the inner end of the guide 347. The carrier 358 reciprocates with the slide 350 over the mold wheel or disk 35 and at the termination of its inward or rearward stroke vertically alines successively with the pockets or seats formed in the mold wheel or disk as hereinbefore explained. As the pocket 359 of the carrier 358 is preliminarily constructed to be fully open at the bottom, it is obvious that some means must be provided for temporarily holding the successive charges

therein, but the retention means for these charges must be sensitive to movement or operative to readily clear the lower portion of the said pockets 359 and the said means consists of thin metal retaining flanges or lips 362 along the opposite side walls of the pocket 359 and similar to the construction of the flanges or lips 170 as hereinbefore described. The retaining flanges or lips 362 have lower inwardly extending angular edges 363 against which the opposite side portions of the bottoms of the successive charges have bearing and the upper body portions 364 of these flanges or lips, as clearly shown by Figs. 35 and 36, have ears 365 extending into recesses or slots 366 formed in the carrier at opposite sides of the pockets 359, the said ears 365 having pivotal movement on rods or pintles 367. The pintles or rods 367 are also engaged by springs 368 having inwardly and downwardly projecting arms 369 bearing against the lower portions of the bodies 364 of the retaining flanges or lips and tending to normally hold the latter inwardly in the position shown by Fig. 36. The opposite lower side portions of the carrier are cut away to give clearance to the retaining flanges or lips when pressure is exerted on each charge of cigarettes in the carrier, as at 370, Fig. 36, and in their outward or clearing movement the retaining flanges or lips 362 operate against the resistance of the springs 368 and as soon as the pocket is clear of a charge the said springs return the flanges or lips to normal position. The resistance to the movement of the flanges or lips 362 is comparatively light but the springs 368 through their arms 369 exert sufficient pressure on the said flanges or lips to hold the charges in the carrier while the latter is moved to a position of alinement over the successive pockets or seats 36 of the mold wheel 35 as demonstrated by Fig. 35. A charge expelling plunger 371 is also used in this modified structure and is very similar, and in fact is practically the same structure as the expelling or discharging plunger 171 shown by Figs. 1 and 2. The plunger 371 is adjustably carried in this instance by the forward extremity of an arm 372, the plunger having a central stem 373 which is adjustable in a cylindrical guide 374 at the outer or front end of the said arm 372. The arm 372 is in turn adjustably connected to a rod 375 loosely engaging the lower guide 376 on the adjacent rear portion of the table 5. The rear extremity of the arm 372 is formed with a sleeve 377 provided with a suitable set screw so that the said sleeve and the arm may be adjusted on the rod 375. The rod 375 extends upwardly and is formed with a spanning loop or closed yoke 378 similar to the structure shown by Fig. 28, the closed yoke 378 having a roller 379 at its upper end to engage a suitably grooved cam 380 on the shaft 11 adjacent to the cam 357. The closed yoke 378 of the rod 375 is mounted to move over the shaft 11 in order to permit the roller 379 to be affected by the groove of the cam 380 to reciprocate the arm 372 and plunger 371 in timed relation to the movement of the carrier 358. By adjusting the stem 373 of the plunger 371 in the end of the arm 372 and by shifting the arm 372 on the rod 375, as may be desired, it is obvious that the vertical stroke of the plunger 371 may be modified at will to accommodate variations in thickness of the charges of cigarettes operated upon or pressed into the mold wheel. At the moment that the carrier 358 moves rearwardly to the limit of its stroke and brings the guard or stop finger 361 across the plane of the guide 347, the plunger 371 is actuated to discharge or to press the charge in the carrier downwardly therethrough into the pocket or seat 36 of the mold wheel below, and owing to the timed operation of the several mechanisms there will always be a pocket or seat of the mold wheel under the carrier when the discharge of the charge of cigarettes from the carrier is to be effected, and after the discharge has ensued, the plunger 371 immediately rises and the carrier 358 moves outwardly to bring the inlet 360 of the pocket 359 in alinement with the inner end of the guide 347, and immediately the carrier is supplied with a further charge of cigarettes.

For the purposes of practical explanation of this modified attachment to replace the cigarette supply means hereinbefore described and shown by Figs. 1 and 2, for instance, the charges of cigarettes have been stated as being partially inclosed, or prepared preliminarily to their movement into the guide 347, and by this preliminary preparation it will be understood that a predetermined number of cigarettes will be held in close relation and have such bulk dimensions as to be readily received into the pocket 359 of the carrier 358 and subsequently discharged or pressed downwardly into the mold wheel pockets. If desired, however, the cigarettes may be otherwise fed to the carrier 358 and need not be preliminarily bunched and partially inclosed, as the operation of this mechanism is not restricted to a preliminary preparation of the charges of cigarettes in partially inclosed form. The wrapper, carton or inclosure for the cigarettes as preferably operated upon by the carrier 358 and plunger 371 and fed inwardly over the auxiliary table 340, will consist of a slide of mediumly soft character and scored or creased to facilitate shaping of the same during the several steps of packaging the cigarettes, said form of slide being shown as a matter of illustration by Fig. 31 and designated by the numeral 381. It

will be understood, however, that the form of wrapper, carton or inclosure as shown by Fig. 30 might equally well be used, as the operation of the machine is not in the least restricted to an exact form of wrapper, carton or inclosure to practically carry out the packaging operation.

After the cigarette charges have been introduced in the pockets of the mold wheel 35, or into the slides of the form shown by Fig. 31, the said charges together with the slides are successively moved around to the folding arm 39 having thereon the plate 218 which is mainly of the same structure as the similar folding arm illustrated by Fig. 1. The folding arm in this instance, however, has the upright shaft 221 provided with a winding spring 382 which is directly mounted thereon and held between and secured to a collar 383 and the base of the post 217, but in other respects the structure is the same. In view of the mounting of the spring 382 directly on the upright shaft 221, the spring 233 secured to the rod 228 is dispensed with in this structure, the spring 382 performing the same function as the said spring 233. The rod 228 carrying the upper rack 229 at its outer extremity is more clearly shown by Fig. 41 as to its engagement with the shaft 11 than in previous figures, the rear end of the rod having the fork 230 slidably embracing the shaft 11 adjacent to the cam 232, the forward extremity of the fork carrying the roller 231 similar to the structure hereinbefore disclosed. The arm 39 with its plate 218 is moved outwardly by the spring 382 which is wound on the shaft, and at such time the roller 231 engages the drop or depression 232^a in the cam 232, as shown by Fig. 41, the arm 39 being retracted by the mechanism just explained, the retraction of said arm causing the spring 382 to automatically wind on the shaft, so that the arm 39 is resiliently moved outwardly to engage and hold over the inner upstanding flap or extremity of the wrapper, carton or inclosure, and is positively retracted by the action of the said rack and pinion and cam mechanism. When the arm 39 is moved outwardly and the spring 382 is unwound the outer end of the arm 39 and plate 218 will yield to an inward pressure in the event that an obstruction or irregularity is encountered with relation to the wrapper, carton or inclosure or the charge in the latter that might be irregularly disposed or become displaced in its pocket, and under these conditions the inward pressure so exerted on the arm 39 and plate 218 will be taken by the spring 382 or the said spring will tend to wind and move the shaft 221 in a direction to pull outwardly on the rod 228 and disengage the roller 231 from the edge of the cam 232 with which it engages, and this disengagement of the roller 231 will continue until the obstruction or resistance to regular operation of the arm 39 is removed, when the arm 228 and roller 231 will assume a normal position relatively to the cam 232. By this provision of automatic operation of the arm 39 to accommodate any irregularity of the character specified, the machine may be permitted to continue its operation without liability of breaking any of the parts or causing a delay in the expeditious shaping and folding of wrappers, cartons or inclosures that will be subsequently fed up to the folding arm 39 and its plate 218. After the folding arm 39 and plate 218 have performed their function relatively to each wrapper, carton or inclosure containing a charge of cigarettes, the mold wheel rotates and carries the wrapper, carton or inclosure with the charge therein under the folding plate or attachment 234 as hereinbefore described, and the outer flap or extremity of the wrapper, carton or inclosure is drawn inwardly on top of the inner folded extremity and the slide so folded and inclosing a charge of cigarettes or other articles is carried around to the final expelling mechanism which is similar in this instance to that heretofore described with the exception that the head 240 of the arm 239 is provided with a pressure plate 384 as clearly shown by Fig. 39, said pressure plate being mounted in a seat 385 at the base of the head and having an outer abutment or flared edge 386. The outlet guide 387 in this instance is considerably shorter than the guide or way 253 hereinbefore described, and it is obvious that any length of guide may be disposed on the exit end of the table in view of the fact that each guide is composed of bars which are suitably shaped and held on the table 5 by means of detachable securing devices.

The pressure plate 384 has pins 388 extending upwardly and movable through openings 389 in the head 240 of the expelling arm, and between the upper surface of the latter arm and adjustable nuts 390 on the pins 388 springs 391 are mounted on the said pins and operate to draw the pressure plate 384 upwardly in its seat. Between the pins 388 an operating stem 392 extends upwardly from the plate 384 through an opening 393 in the head 240, the stem 392 rising far enough above the top surface of the head 240 to engage a fixed cam 394 held by a suitable support 395 in a horizontal position over the central portion of the guide or way 387, the opposite ends of the fixed cam 394 being flared upwardly as at 396.

The purpose of the pressure plate 384 is to depress the center of the wrapper, carton or inclosure so that the expulsion of the latter, or its movement into the inner extremity of the guide or way 387 and the shell to receive the wrapper, carton, or inclosure, which is of slight form, may be

carried on without restriction to the outward movement of the filled slide, or in other words, to prevent the center of the shell catching against the front part of the center of the slide that might at that time be slightly elevated or bulged. The depression of the plate 384 is effected when the lowest portion of the fixed cam 394 is engaged thereby and the upper end of the stem 392 may be provided with any suitable anti-friction means such as a roller 397 to render the movement thereof easy against the under face of the said cam 394. After the presser plate 384 has performed its function it is immediately cleared from the shell and slide by engaging the outer upwardly flared extremity 396 of the cam 394, and on its return movement the plate will be again depressed and be permitted to return to its normal elevated position by passing the inner upwardly extending extremity of said fixed cam. The shell 398, as shown by Figs. 42 and 43 will, when shaped for receiving the slide as illustrated by Fig. 43, be fed inwardly against and held open relatively to the outer end of the guide or way 387 by yielding members or expanders consisting of a lower plate spring 399, inwardly converging side springs 400, and upper downwardly trending top springs 401. The plate spring 399 is secured to the base of the outlet extremity of the guide or way 387, and the springs 400 and 401 are held by short posts or upstanding projections 402 on opposite sides of the said guide or way, as clearly shown by Fig. 40. The plate spring 399, side springs 400 and top springs 401 have a combined engagement extent at their outer terminals less than the inner dimensions of the shell 398, and hence the latter may be readily slipped over the said expanding means, and by such operation the bottom of the shell is held firmly under the yielding plate 399, the sides of the shell are expanded by the springs 400 and the upper portion or top of the shell is held elevated by the springs 401, the converging arrangement of the springs 400 and the downward trend of the springs 401 facilitating the close association of the inner end of each shell with the outlet extremity of the guide or way 387, and when the shell is applied to the outer end of the way on the expanding devices therefor as just explained, the inner marginal edges of the shell bear firmly against the posts 402 and the base of the guide or way 387, and in this position the slide or the wrapper, carton or inclosure carrying a charge of cigarettes is readily forced into the said shell by the arm 239 which has its outer end movable fully to the outer terminal or outlet extremity of the guide or way 387.

On the shaft 72, which controls the operation of the mold wheel 35 and which is actuated by the Geneva plate or motion controlling disk 74, a bevel or master gear 403 is mounted and meshing therewith is a pinion 404 on the inner end of a power transmitting shaft 405 held in suitable bearings 406 depending from the under side of the table 5. The shaft 405 projects outwardly at a suitable distance beyond the discharge end of the machine and provides means for transmitting the motion of the driving mechanism of the entire machine in timed relation to the several devices hereinbefore described to a shell or final inclosure feeding and package discharging means applied to the table 5 close to the outlet extremity of the guide or way 387. This guide or way 387 and the shell feeding and final discharge mechanism replaces the stack 300 and the coöperating devices hereinbefore described. The shell feeding and final discharge mechanism operates in a plane transverse with relation to the outlet end of the guide or way 387, the latter being positioned intermediately of the shell feeding and final discharge mechanism. In suitable bearing hangers or devices 407 and 408 stub shafts 409 and 410 are respectively mounted for free rotation and carry thereon sprocket wheels 411 and 412. The shaft 405 is located intermediately of the shafts 409 and 410, and on the outer end of said shaft 405 a sprocket wheel 413 is secured and has a chain belt 414 trained thereover and also over a sprocket wheel 415 on the outer end of the shaft 410 which is longer than the shaft 409. The power from the shaft 405 is therefore transmitted to the shaft 410 and the shell feeding and final discharge mechanism is thus actuated in proper timed relation to the remaining devices of the machine. The sprocket wheels 411 and 412 are disposed in alinement and operate between inner and outer rails 416 and 417 secured to the adjacent end of the table 5, the outer rail 417 being wider than the inner rail and both rails are disposed at proper elevations below the plane of the top of the table 5 so as to bring the successive shells 398 into accurate engagement with the expanding devices at the outer end of the guide way 387. An endless conveyer or belt 418 is trained over the sprocket wheels 411 and 412, and at intervals through the length of this belt expansible and contractible pockets 419 are secured to regularly move therewith. Each pocket 419, as clearly shown by Figs. 42 and 43, embodies a base 420 with a fixed end 421 extending upwardly at right angles therefrom and terminating in an inwardly projecting guard flange or overhanging ledge 422. The remaining or forward end 423 of the pocket is fulcrumed to the base as at 424 and also has an inwardly projecting or overhanging ledge or guard flange 425. The fulcrum connection of the forward end 423 is formed as a part of the

said end and is preferably in the shape of a cylindrical rod or bar as indicated by dotted lines in Figs. 42 and 43, and has a crank or actuating arm 426 extending from the outer end thereof and carrying an anti-frictional or contact roller 427 which is adapted to engage a cam way 428 disposed at an intermediate point on the outer rail 417 and embodying a rear top edge 429 with a gradual slope merging into a horizontal top edge 430, and from the latter edge a downwardly extending short inclined edge 431 runs to the front terminal of the cam way or rib 428. The rollers 427 of the successive pockets 419 traverse the camway or rib 428 and these rollers move upwardly over the edge 429, the forward ends 423 of the pockets are gradually closed, the said ends being completely closed by the rollers engaging the top horizontal edge 430 of the camway or rib and remaining in closed position as long as the said rollers move over the said horizontal top edge. As soon as the rollers 427 engage and descend the forward short inclined edge 431, the forward ends 423 of the pockets are gradually opened, the opening operation of these forward ends being quickened for a subsequent final discharge operation of the completed package or a shell inclosed slide embodying a predetermined number of cigarettes.

Extending over a part of the outer portion of the sprocket wheel 412 and likewise over the inner portion of the sprocket wheel 411 are guard rails 432 and 433, the outer end of the guard rail 432 extending over the outer rail 417 and terminating at the front extremity of the cam way or rib 428. The rail 433 also extends upwardly over the rail 417 and terminates a short distance in rear of the lowermost portion of the inclined edge 429 or at a distance from the rear terminal of the said cam way or rib 428. The object of the rails 432 and 433 is to properly guide and center the successive pockets as they move over the sprocket wheels 412 and 411. At the upper rear portion of the rail 417 a downwardly and forwardly inclined guide rail 434 is held by suitable supports 435^a and has its opposite extremities flared, the purpose of this guide rail being to direct the arms and rollers 426 and 427 downwardly toward the rail 417 in the event that when the pockets 419 move upwardly over the rear portion of the rail 417 the ends 423 are not properly disposed or have failed to open by gravitation, and it will be seen that when the forward lowermost extremity of the guide rail 434 is reached, the space between the same and the rail below is so reduced that the rollers 427 and arms 426 must necessarily be forced downwardly and fully open the forward ends 423 of the pockets. All of the pockets have inner and outer fully open sides, and each pocket passes in proximity to the base portion of a shell feeding stack 435 having a feeding slide 436 in the bottom thereof and the upper surfaces of the bottoms 420 of the pockets are in a plane coincident with the lower portion of this stack or with the upper surface of the slide 436 when the several pockets arrive opposite the outlet of the stack. The rails or ledges 417 and 418 serve as guides for the successive pockets 419 carried by the conveyer or conveying belt 418, the latter moving between the said rails or ledges. Each pocket 419 has a guide rib 437 depending from the bottom 420 thereof, and the opposite sides of this rib are formed with longitudinal grooves 438 which are fully open at opposite ends for engagement with inwardly projecting steadying flanges 439 secured to or forming part of the said rails or ledges 417 and 418, both flanges 439 projecting inwardly toward the conveyer or belt 418 and tapered at opposite ends so as to effect a ready engagement and release of the grooved ribs 437 of the pockets 419. The function of the flanges 439 is to maintain the pockets in a positive horizontal plane to receive the shells and positively convey the latter at a proper elevation or plane relatively to the outlet of the guide 387 and to carry the combined shells and charged slides to a point of discharge without liability of the least depression or vertical displacement, so that the several operations may be practically carried on without the least obstruction or retardation or injury to either the shells or slides and the charges in the latter. The guards 432 and 433 also operate to prevent irregular movement of the pockets 419 in their travel around the said guards and particularly restrict the movement of the arms 426 and rollers 427 and stop the latter in any tendency toward inward movement beyond a predetermined extent. It is obvious that when the pockets 419 reach certain lower positions during their movement with the conveyer the fulcrumed ends 423 thereof will be held closed owing to the effect of gravity thereon, as clearly shown by Fig. 38. The guide bar 237 to accommodate this modified attachment is extended outwardly a greater distance than in the structure shown by Figs. 1 and 2, and to the outer end of this bar an upwardly projecting bearing support or arm 440 is secured and has a bearing 441 at its upper extremity. Front and rear uprights 442 and 443 are also secured to the table 5 and have bearings 444 and 445 at their upper ends. The bearing 444 is in alinement with the bearing 445, and in said bearings a rock shaft 446 is mounted and has a crank arm 447 at its rear end depending therefrom and provided with a roller 448. The shaft 52 in this instance is extended outwardly back

of the shell stack 435 and has a cam 449 secured on the outer end thereof and provided with a suitably shaped circumferentially extending cam groove 450 into which the roller 448 on the crank arm 447 has operative projection. Adjacent to the outer end of the shaft 446 a kicker arm 451 is secured and depends to a point adjacent to the plane of the conveyer 418 and the pockets 419 and is located normally inside of the plane of movement of the latter parts and is provided at its lower end with a pushing head 452 which operates in an outward direction to clear the successive pockets 419 of the completed packages, pushing the said packages on a table or other support arranged adjacent to the end of the machine. In the bearing 441 at the upper end of the arm 440 a shorter rock shaft 453 is mounted and also has a kicker arm 454 adjustably mounted thereon and provided at its lower end with a pushing head 455, the arm 454 normally standing outwardly beyond the outer sides of the pockets 419 for the purpose of moving the shells 398 inwardly over the expanding devices at the outlet of the guide or way 387 and for holding the said shells against displacement during the movement thereinto of the slides containing the charges of cigarettes.

On the shaft 453 a combined motion transmitting and adjusting member is secured directly in rear of the engagement of the kicker arm 454 with the shaft 453. This combined motion transmitting and adjusting member embodies a sleeve 456 engaging the shaft 453 and having an inwardly projecting toothed segment 457 which is held in continual mesh with a toothed segment 458 secured on the shaft 446. Extending downwardly from the sleeve 456 is a yoke 459 having opposite arms 460 and 461 which are provided with outwardly projecting lower terminals or extremities 462. The lower angular extremity of the inner arm 461 of the yoke carries an adjusting screw and nut 463 which engages the inner side of a rearwardly projecting lug 464 of the kicker arm 454. Between the lower angular extremity of the outer arm 460 of the yoke and the lug 464 a spring 465 is interposed to give the kicker arm 454 a yielding adjustment and permit said arm to engage the outer end of each shell 398 with a yielding pressure. The position of the kicker arm 454 is regulated by adjusting the screw and nut 463, the screw extending outwardly from the lug 464 and through the lower angular extremity 462 of the inner arm 461 of the yoke. It is obvious that by adjusting this screw the arm 454 may be shifted inwardly and outwardly to a limited extent; and when moved outwardly the spring 465 is compressed and a stronger spring tension is exerted on the arm 454 and the yielding stroke of the said latter arm will be accordingly modified. By having the arm 454 disposed on the shaft 453 so as to have a slight yielding pressure through its head 455 on each shell as the latter comes up into position opposite the outer expanding extremity of the way or guide 387, injury to or crushing of each shell is prevented if the movement of the arm 454 is slightly greater than necessary to fully dispose each shell on the outer extremity of the said guide or way 387, and, furthermore, by this yielding mounting of the arm 454, should an obstruction be encountered to the inward movement of the arm from any cause, the yielding movement of the arm will compensate for the said obstruction without breaking or checking the operation of the adjacent mechanism and of the machine as an entirety.

It will be observed that the shaft 453 is operated through the toothed segment 458 transmitting the motion of the shaft 446 to the toothed segment 457, and the kicker arms 454 and 451 are simultaneously operated to move in opposite directions, or while the arm 454 is moving inwardly the arm 451 is moving in an outward direction, and therefore when the arm 454 is operating to place a shell in position to receive a charged slide from the guide 387, the arm 454 is expelling a completed package from the pocket or carrier 419 in line therewith and simultaneously the feed slide 436 at the bottom of the stack 435 is moving a shell into another pocket or carrier 419 which will be in position at the outlet of the said stack, as shown by Fig. 38. The shaft 446 and the shaft 443, together with their kicker arms 451 and 454, are operated at timed intervals through the medium of the cam 449 and the conveyer or chain belt 418 having the pockets or carriers 419 thereon at regular distances apart is also geared up so as to operate in timed relation to the kicker arms 451 and 454 or to bring a pocket or carrier 419 in shell receiving position at the base of the stack 435, another pocket in shell delivering position or in line with the outlet end of the guide or way 387, and a further pocket in line with the lower end or presser head 452 of the kicker arm 451, and just as a shell 398 is disposed in one of the pockets 419 in the condition shown by Fig. 42 and the shell in the pocket 419 next in advance has been opened and moved inwardly over the expanding devices at the outlet of the guide 387 and has received a charged slide and again moved outwardly thereinto, and the kicker arm 451 has operated to expel the completed package from the pocket 419 adjacent thereto, the conveyer or belt 418 is moved until the series of three pockets or carriers 419 are again positioned as shown by Fig. 38 when the conveyer comes to a

stop, and this alternate movement and stoppage of the conveyer 418 ensues regularly and is controlled by the Geneva plate 74 through the medium of the master gear 403, pinion 404, and shaft 405 carrying the sprocket 413 at its outer end, over which and the driving sprocket 415 the motion transmitting chain belt 414 is trained. In other words, the conveyer 418 with the pockets or carriers 419 thereon is moved in timed relation to and practically in consonance with the mold wheel 35. In other words, while a charged slide is being pushed outwardly from its pocket in the mold wheel 35 into the way or guide 387, a shell is positioned over the expanding devices at the outlet of the said guide or way and simultaneously the arm 239 carrying the presser plate 384, which is in coöperative relation with the charged slide, will move fully to the outer extremity of the guide 387 and said presser plate will depress the center of the outer extremity of the charged slide so as to permit the ready movement of the said charged slide into the inner end of the expanded shell held on the outer extremity of the guide 387, the outer flared end 386 of the presser plate 384 moving over the inner top portion of the shell so as to permit the charged slide to be fully inclosed within the shell by the expelling arm 239. The presser plate 384 will readily clear the inner portion of the shell by reason of the fact that the antifrictional roller 397 on the upper end of the stem 392 will be in engagement with the outer upwardly flared end 396 of the fixed cam 394, and under these conditions the presser plate will be drawn upwardly into normal position, as shown by Fig. 39. It will be understood that the cam 394 may be vertically adjusted in the upright or support 395 to modify the depression of the plate 384, the stem of the cam being movably held in the said upright or support 395 by any suitable means, as for instance through the medium of an adjusting screw or other analogous device as shown by Fig. 39.

When the shells are placed in the stack 435 they are in a collapsed or folded condition as illustrated by Fig. 42, and are fed out at the base of the stack by the reciprocating slide 436 in timed relation to the movement of the conveyer 418 and the pockets 419 thereon. Each shell is delivered into each pocket with the fold line or score 466, see Fig. 42, of the lower outer corner of the shell at the bottom at a distance inwardly from the breaking or folding line of the upper outer corner, and likewise the folding or breaking line 467 of the upper rear corner is at the top in advance of the lower rear folding or breaking line or the folding line of the lower rear corner, and the pressure on the shell is exerted on the folding or breaking line of the upper outer corner, and as the fulcrumed end 423 of each pocket moves upwardly through engagement of the roller 427 of the arm 426 of the said end 423 with the cam way 428, the said end 423 is gradually closed and the slide is fully opened when the roller 427 reaches the horizontal edge 430, the slide being held between the ends 421 and 423 under the overhanging flanges 422 and 425 and the end 423 of each shell remains in closed position as long as the roller 427 is in engagement with and moves over the upper horizontal edge 430 of the cam way 428, and during this period the shell is pushed inwardly by the pressure head 455 at the lower end of the kicker arm 454 and caused to engage the expanding devices at the outer end or outlet of the guide or way 387 to receive a charged slide from the said guide. After the charged slide is fully inserted in the shell retained in expanded condition on the outlet extremity of the guide or way 387, the expelling arm 239 continues to move outwardly and unitedly expels or shoves the slide and shell in proper assembled relation back into the pocket 419 and the pressure head 455 of the kicker arm 454 is also simultaneously moved outwardly with the completed package, and the parts are so proportioned and positioned relatively to each other that when the completed package is forced into the pocket or carrier 419 waiting for the same, the pressure head 455 of the kicker arm 454 will have cleared or become disengaged from the outer end of the completed package and will have assumed this clearing position just as the roller 427 reaches the upper limit of the downward incline 431 of the cam way 428, and as the roller 427 moves downwardly over the inclined edge 431, the front end 423 of the filled pocket gradually opens and fully clears and relieves the package of pressure when the pocket arrives opposite or in operative alinement with the pressure head 452 of the kicker arm 451, thereby relieving the completed package of all resistance against free discharge or final liberation from the conveyer 418 or the pocket on the latter that has been carrying the same.

The slide 436 at the bottom of the stack 435 for individually discharging collapsed shells from the said stack moves in opposite guides 468 which are grooved as at 469, see Fig. 38, to receive horizontally projecting side flanges 470 of the slide to maintain the latter in a constant plane of movement. On the slide 436 a discharging plate 471 is adjustably secured and is provided with centrally disposed slots 472 in longitudinal alinement engaged by adjusting screws 473 extending into the slide 436, and by adjusting this plate the projection thereof beyond the slide or relatively to the front or outer

extremity of the said slide may be modified to accommodate various discharge conditions relatively to the shells. The plate 471 projects laterally over the top of the slide 436 to the full width of the stack 435, and the guides 468 extend under the stack and form opposite supports for the shells as they gravitate into discharging position. The plate 471 moves through openings 474 at the base portion of the opposite sides of the stack and close to the adjacent portions of the stack, and as will be seen in Fig. 37 the stack is open at the center of the front and rear portions thereof or the opposite sides have an approximate U-shaped form. At the lower portion of the outer or discharge side of the stack, recesses 475 are formed, and therein sizing plates 476 are adjustably mounted to regulate the discharge opening at the base of the stack to accommodate various thicknesses of the collapsed or folded shells in the said stack. It will be understood that the stack 435 will be loaded or charged with a number of the shells 398 disposed in proper position for discharge into the successive pockets or carriers 419, and each shell is expelled from the bottom of the stack and the remaining shells gravitate so as to bring the successive shells into a plane for individual engagement by the plate 471 on the slide 436. The slide 436 with its plate 471 is given a regular or timed reciprocating movement by any suitable connections with the remaining operating mechanism so that the said slide will regularly expel or discharge a folded shell into the successive open pockets or carriers 419 as the latter are moved in position relatively to the outer portion of the base of the stack, as shown by Fig. 38. The slide 436 carrying the discharging or expelling plate 471 has the under portion thereof depending through or between the guides 468 and below the under side of the table 5, and thereto a link or connecting rod 477 is movably attached and extends rearwardly under the table and is eccentrically and adjustably secured to a gear 478 rotatably held in horizontal position by a casting 479 dependingly supported from the table 5 and also carrying a motion transmitting gear 480 held in continual mesh with the gear 478. The link or connecting rod 477 is made adjustable relatively to the gear 478 so as to regulate the stroke of the said connecting rod, slide 436 and plate 471, and as a convenient means of obtaining this adjustment the wrist pin or stud 481 used to connect the inner end of the rod 477 to the gear 478 adjustably engages a slot 482 in the said gear 478, and the wrist pin or stud 481 may be held in fixed adjusted position by any suitable clamping or binding means engaging the under side of the gear 478.

In replacing the modified inclosure completing attachment just explained by that first described, the said attachment may be readily disconnected from the end of the table 5 and the link or connecting rod 477 may be separated from the gear 478 by removing the wrist pin or stud 481 and likewise the remaining gears and actuating devices may be easily disconnected from their coöperating parts which may remain intact with the main machine without interfering with the application and operation of the attachment first described.

From the foregoing it will be understood that either the stack or the conveying means carrying the shells may be used in connection with the machine, the one device being removed when the other is in operation, and when the stack is employed the pasting devices will come into play and when the shell conveying means is used and the stack eliminated the pasting devices will also be removed. The machine is thus equipped for charging and inclosing two kinds of packages, and it will be understood that the equipment of the machine will include all of the devices necessary for the two main operations or to perform the two different inclosing functions.

The outer flaps or extremities of the inclosure in the mold wheel will clear the portions of the cigarette feeding or charging mechanism overhanging said wheel by being drawn under portions of the mechanism in some instances, or, as shown by Figs. 32, 33 and 34, the outer flaps or extremities are drawn into a clearance slot 483 at the inner side of the base of the upright 7^a, said slot having a rear entrance enlargement or mouth 484, and after passing under the cigarette feeding mechanism, as particularly shown by Fig. 33, said outer flaps or extremities of the inclosures are brought up into proper positions for operations in connection therewith by the guard rail 90 without tearing or mutilating said flaps or extremities.

What is claimed is:

1. In a machine for packaging cigarettes and other articles, the combination of a mold wheel having a step rotation imparted thereto and provided with a plurality of pockets, means for successively feeding blanks to the mold wheel, a shaping device for pressing the successive blanks into the pockets of the mold wheel to form inclosures, mechanism for separating cigarettes into bunches of a specific number and shifting the individual bunches to a point of discharge over the mold wheel and pressing said bunches downwardly into the shaped blanks in the pockets, and mechanism for regularly expelling the charged inclosures from the mold wheel and completing the said inclosures.

2. In a machine for packaging cigarettes

and other articles, the combination of a mold wheel having a step rotation imparted thereto and provided with a plurality of pockets, mechanism for feeding blank inclosures to and shaping said inclosures in the pockets, mechanism for separating cigarettes from a loose mass of the latter into bunches of a specific number and feeding the bunches individually to a point of discharge and pressing the bunches downwardly into the shaped inclosures, mechanism for folding portions of the inclosures during the movement of the mold wheel, and mechanism for expelling the charged inclosures and completing the latter.

3. In a machine for packaging cigarettes and other articles, the combination of a mold wheel having a plurality of pockets, mechanism for feeding blank inclosures to and shaping said inclosures in the successive pockets, mechanism for separating a predetermined number of cigarettes by endwise movement from a mass of cigarettes at intervals to form bunches and conveying the bunches individually to a point of discharge and pressing them downwardly into the shaped inclosures, and mechanism for discharging the charged inclosures from the mold wheel and completing said inclosures in commercially vendable condition, all of said mechanisms being simultaneously operative at intervals of rest of the mold wheel.

4. In a machine for packaging cigarettes and other articles, the combination of a mold wheel having a plurality of pockets, mechanism for feeding blank inclosures to and shaping said inclosures in the successive pockets, mechanism for separating predetermined numbers of cigarettes by endwise movement from a loose mass of cigarettes to form bunches which are individually conveyed in planes at right angles from their point of separation to a point of discharge and pressed downwardly into the shaped inclosures, and mechanism for discharging the charged inclosures from the mold wheel and completing said inclosures in commercially vendable condition, all of said mechanisms being simultaneously operative.

5. In a machine for packaging cigarettes and other articles, the combination of a mold wheel having a step rotation imparted thereto and provided with a plurality of pockets, mechanism for feeding blank inclosures to and shaping said inclosures in the pockets, mechanism for separating specific numbers of cigarettes at intervals from beneath a mass of loose cigarettes to form bunches which are individually conveyed to a point of discharge over the mold wheel and pressed downwardly into the shaped inclosures, mechanism for folding portions of the inclosures over the charges of cigarettes, and mechanism for discharging the charged inclosures from the mold wheel, all of said mechanisms simultaneously operating to perform their specific functions.

6. In a machine for packaging cigarettes and other articles, the combination of a mold wheel having a step rotation imparted thereto and provided with a plurality of pockets, each pocket having upper overhanging edges at the opposite sides and depressions in the bottoms thereof below the overhanging edges, mechanism for successively feeding blank inclosures to the pockets and for pressing and shaping the inclosures within the pockets by forcing the side members of the inclosures under the overhanging edges and downwardly into the said depressions of the several pockets, mechanism for separating cigarettes into distinct bunches of a predetermined number and pressing the said bunches downwardly into the shaped inclosures, and mechanism for successively discharging the charged inclosures from the mold wheel.

7. In a machine for packaging cigarettes and other articles, the combination of a mold wheel having a step rotation imparted thereto and provided with a plurality of pockets, mechanism for successively feeding blank inclosures to the pockets and shaping the inclosures in the latter, a blank stop embodying an open guard disposed at an angle of inclination adjacent to the inner portion of each pocket of the mold wheel for limiting the projection of the blank inclosures over the mold wheel and to properly position said inclosures relatively to the pockets, and mechanism for charging the inclosures and discharging the charged inclosures from the mold wheel.

8. In a machine for packaging cigarettes and other articles, the combination of a mold wheel having a step rotation imparted thereto and provided with a plurality of pockets having overhanging side edge portions and raised central portions to provide lower depressions adjacent to the side walls thereof, mechanism for feeding blank inclosures to the pockets, a shaping plunger for the inclosures having ribs on the bottom at opposite sides to force the portions of the blanks engaged thereby into the depressions adjacent to the side walls of the pockets, the said plunger forcing the blank inclosures into the pockets and causing opposite side portions of the latter to be held under the overhanging edges of the pockets, and mechanism for charging the inclosures in the pockets with cigarettes and discharging the charged inclosures from the mold wheel.

9. In a machine for packaging cigarettes and other articles, the combination of a mold wheel having a step rotation imparted

thereto and provided with a plurality of pockets, mechanism for feeding blank inclosures to and pressing said inclosures into the pockets, mechanism for separating cigarettes into bunches of a specific number and pressing them into the inclosures in the pockets, said mechanism embodying a shiftable carrying means for preliminarily receiving the bunches of cigarettes and through which the bunches are forced into the pockets, a plunger to depress successive the bunches through the carrying means into the inclosures in the pockets, and mechanism for discharging the charged inclosures from the pockets and completing the inclosures in commercially vendable condition.

10. In a machine for packaging cigarettes and other articles, the combination of a mold wheel having a step rotation imparted thereto and provided with a plurality of pockets, mechanism for feeding blank inclosures to and pressing said inclosures into the pockets, mechanism for separating the cigarettes into bunches or charges having a specific number and embodying a shiftable carrier which first receives the bunches or charges of cigarettes, a plunger for depressing the charges of cigarettes from the carrier into the inclosures in the mold wheel and devices for disposing charges comprising a specific number of cigarettes into the carrier, and mechanism for discharging the charged inclosures from the mold wheel.

11. In a machine for packaging cigarettes and other articles, the combination of a mold wheel having a step rotation imparted thereto and provided with a plurality of pockets, mechanism for disposing and shaping inclosures in the pockets and charging the inclosures with cigarettes, a radially movable folding blade and a fixed flange adjacent to the periphery of the mold wheel for inturning the opposite extremities of the inclosures, and mechanism for discharging the charged inclosures from the mold wheel.

12. In a machine for packaging cigarettes and other articles, the combination of a mold wheel having a step rotation imparted thereto and provided with a plurality of pockets, mechanism for feeding and disposing blank inclosures in the pockets and charging the said inclosures with cigarettes, a folding arm movable inwardly and outwardly with relation to the mold wheel and having an upwardly flaring blade at its outer end of a length approximately equal to the width of the pocket for folding the inner extremities of the inclosures downwardly over the cigarettes in the latter, and mechanism for discharging the charged inclosures from the mold wheel.

13. In a machine for packaging cigarettes and other articles, the combination of a mold wheel having a step rotation imparted thereto and provided with a plurality of pockets, mechanism for depositing inclosures in the pockets and for separating cigarettes from beneath a loose mass into bunches or charges embodying a specific number therein and individually conveying the bunches to a point of discharge over the mold wheel and forcing them downwardly into the inclosures, a guide for the charged inclosures, mechanism for discharging the charged inclosures from the mold wheel into the said guide, and mechanism for receiving and moving the charged inclosures away from the guide and subjecting them to shaping pressure and completing the inclosures in commercially vendible condition.

14. In a machine for packaging cigarettes and other articles, the combination of a mold wheel having a step rotation imparted thereto and provided with a plurality of pockets, mechanism for feeding blank inclosures to and pressing said inclosures into the pockets, mechanism for successively charging the inclosures in the pockets with cigarettes, a folding arm movable over the mold wheel for folding the inner members of the inclosures, a fixed folding means for folding the outer members of the inclosures, and a reciprocating arm for discharging the charged inclosures from the mold wheel.

15. In a machine for packaging cigarettes and other articles the combination of a mold wheel having a step rotation imparted thereto and provided with a plurality of pockets open at their outer and inner ends and having overhanging side edge portions at the tops thereof and lower depressions at opposite sides of elevated central bottom portions, mechanism for feeding blank inclosures to and pressing said inclosures into the pockets so that the upper edges of the sides of the inclosures will be covered and shielded and the end fold members of the inclosures free, mechanism for charging the inclosures in the pockets with cigarettes, outer fixed and inner radially movable devices for infolding the opposite free end members of the inclosures over the charges of cigarettes, and mechanism for discharging the charged inclosures from the mold wheel.

16. In a machine for packaging cigarettes and other articles, the combination of a mold wheel having a step rotation imparted thereto and provided with a plurality of pockets open at opposite extremities, mechanism for feeding blank inclosures to and pressing said inclosures into the pockets and leaving the opposite end members of the inclosures free, mechanism for charging the inclosures with cigarettes, a fixed guard adjacent to and surrounding a portion of the periphery of the mold wheel for holding the outer end members of the inclosures in elevated positions,

fixed and reciprocating devices for respectively folding the opposite end members of the inclosures over the charges of cigarettes, and mechanism for expelling the charged inclosures from the mold wheel.

17. In a machine for packaging cigarettes and other articles, a mold wheel having a step rotation imparted thereto and provided with a plurality of pockets, mechanism for pressing blank inclosures downwardly into the pockets and for separating a predetermined number of cigarettes from beneath a loose mass of cigarettes to form bunches which are individually conveyed over the blank inclosures in the pockets and pressed downwardly into the said inclosures, an outlet means for the charged inclosures provided with a contracted portion, mechanism for discharging the charged inclosures from the mold wheel into the outlet means, and mechanism for removing the charged inclosures from the outlet means and subjecting them to shaping pressure and also completing said inclosures in commercially vendible condition.

18. In a machine for packaging cigarettes and other articles, the combination of a rotatable mold wheel provided with pockets open at opposite extremities and having inclosure retaining edges overhanging the same and folding projections at their inner terminals, the bottoms of the pockets having longitudinal centrally disposed raised portions, and mechanism for feeding and pressing inclosures into the pockets including a shiftable carrier to preliminarily receive the cigarette charges, charging the inclosures in the pockets with cigarettes, closing the opposite extremities of the inclosures and discharging the charged inclosures from the mold wheel.

19. In a machine for packaging cigarettes and other articles, the combination of a rotatable mold wheel having pockets open at their inner and outer extremities and provided with end folding projections, mechanism for feeding and pressing blank inclosures into the pockets, inclined guards at the inner extremities of the pockets, the inclosures engaging said guards and having extremities held up by the said projections, and mechanism for charging the inclosures with cigarettes, completing the fold of the inclosure extremities over the cigarette charges and discharging the charged inclosures from the mold wheel.

20. In a machine for packaging cigarettes and other articles, the combination of a rotatable mold wheel provided with pockets open at their inner and outer extremities and having projecting edges at the top and folding projections at their inner extremities, mechanism for feeding blank inclosures to and pressing them into the pockets, side members of the inclosures being held under said projecting edges and the inner flap members raised by the folding projections, mechanism for charging the inclosures with cigarettes, folding the opposite extremities of the inclosures, a guide for the charged inclosures having a contracted portion, and mechanism for discharging the charged inclosures through the guide.

21. In a machine for packaging cigarettes and other articles, the combination of a mold wheel having a step rotation imparted thereto and provided with pockets, mechanism for feeding and shaping inclosures in said pockets, mechanism for charging the inclosures with cigarettes, mechanism for preliminarily pasting a portion of the inclosures, devices for folding the opposite extremities of the inclosures, a guide having pasting mechanism coöperating therewith and also provided with means for folding portions of the inclosures, the pasting mechanism coöperating with the guide applying paste to the side portions of the inclosures, means for discharging the charged inclosures from the mold wheel into the guide, and mechanism for relieving the guide of the inclosures and completing the latter in commercially vendible condition.

22. In a machine for packaging cigarettes and other articles, the combination of a mold wheel having a step rotation imparted thereto and provided with pockets, mechanism for feeding inclosures to and shaping said inclosures in the pockets, mechanism for charging the inclosures in the pockets with cigarettes, mechanism for pasting one extremity of each inclosure and for folding the opposite extremities of the inclosures, a guide having pasting mechanism coöperating therewith, means for discharging the inclosures from the mold wheel into the said guide, the pasting mechanism coöperating with the latter engaging side members of the inclosures, and a stack for receiving the inclosures from the guide, the inclosures being vertically movable through the stack.

23. In a machine for packaging cigarettes and other articles, the combination of a mold wheel having a step rotation imparted thereto and provided with pockets, mechanism for disposing inclosures in the pockets and charging the inclosures with cigarettes, mechanism for partially completing the inclosures during the movement of the mold wheel, a guide to receive the inclosures from the mold wheel, mechanism for discharging the inclosures from the mold wheel into the guide, and an expansible and contractible stack into which the inclosures are individually disposed and completed.

24. In a machine for packaging cigarettes and other articles, the combination of a mold wheel having a step rotation imparted thereto and provided with pockets, mechanism for disposing inclosures in the pockets and

charging the inclosures with cigarettes, mechanism for partially completing the inclosures during the movement of the mold wheel, a guide to receive the inclosures from the mold wheel, mechanism for discharging the inclosures from the mold wheel into the guide, an expansible and contractible stack into which the inclosures are individually disposed and completed, and means coöperating with the top of the stack for discharging the completed charged inclosures therefrom.

25. In a machine for packaging cigarettes and other articles, the combination of a mold wheel having a step rotation imparted thereto and provided with pockets, mechanism for disposing inclosures in the pockets and charging the inclosures with cigarettes, mechanism for pasting portions of the inclosures and folding the opposite extremities of the latter, a guide having final pasting mechanism coöperating therewith to engage portions of the inclosures, mechanism for discharging the inclosures from the mold wheel into the guide, the unfolded portions of the inclosures in moving through the guide being infolded against opposite parts of inclosures, a stack in the bottom of which the inclosures are successively introduced, and means at the top of the stack for individually removing the inclosures.

26. In a machine for packaging cigarettes and other articles, the combination of a mold wheel carrying partially completed inclosures charged with cigarettes, mechanism for imparting a step rotation to the mold wheel, a guide to receive the inclosures from the mold wheel, mechanism adjacent to a portion of the mold wheel and also coöperating with the guide for pasting different portions of the inclosures, means coöperating with the mold wheel for folding opposite extremities of the inclosures, the guide also being provided with walls for infolding opposite portions of the inclosures, a stack into the lower portion of which the inclosures are introduced from the guide, and means at the upper terminal of the stack for removing the inclosures.

27. In a machine for packaging cigarettes and other articles, the combination of a mold wheel provided with means for receiving partially completed inclosures, mechanism for charging the inclosures with cigarettes, a guide adjacent to the mold wheel for receiving the inclosures from the latter, mechanism for discharging the inclosures from the mold wheel into the guide, mechanism adjacent to the mold wheel for pasting portions of the inclosures and for folding the opposite extremities of the latter, pasting mechanism coöperating with the guide engaging other parts of the inclosures, the latter parts being folded by movement through the guide, an elevator receiving the inclosures from the guide, an automatically expansible and contractible stack in which the inclosures are raised by the elevator, and means at the upper extremity of the stack for removing the inclosures as liberated from the stack.

28. In a machine for packaging cigarettes and other articles, the combination of a mold wheel having a step rotation and provided with pockets, mechanism for feeding blank inclosures to and shaping said inclosures in the pockets, mechanism for feeding charges of cigarettes to the inclosures in the pockets, a guide adjacent to the mold wheel, means for folding and securing parts of the inclosures and coöperating with the mold wheel and guide, means for discharging the charged inclosures from the mold wheel, and an expansible and contractible stack into the lower portion of which the charged inclosures are successively introduced and elevated therethrough and finally liberated at the upper extremity of the stack.

29. In a machine for packaging cigarettes and other articles, the combination of a mold wheel, mechanism for feeding blank inclosures to and shaping said inclosures in the mold wheel, mechanism for feeding charges of cigarettes to the inclosures in the mold wheel, a guide adjacent to the mold wheel, means for folding and securing parts of the inclosures and coöperating with the mold wheel and guide, an expansible and contractible stack into the lower portion of which the charged inclosures are successively introduced and elevated therethrough, the stack having the parts thereof engaged by yielding pressure means, and means for discharging the charged inclosures from the mold wheel through the guide into the stack.

30. In a machine for packaging cigarettes and other articles, the combination of a mold wheel having a step rotation and provided with pockets, mechanism for feeding inclosures to and shaping the latter in the pockets, mechanism for feeding charges of cigarettes to the inclosures in the pockets, means for folding and securing parts of the inclosures, a stack having an expansible and contractible operation at different periods throughout its length, and mechanism for discharging the inclosures from the mold wheel into the lower portion of the stack and for successively elevating the inclosures through the stack.

31. In a machine for packaging cigarettes and other articles, the combination of a mold wheel having a step rotation, mechanism for feeding blank inclosures to and shaping them in the mold wheel, mechanism for feeding charges of cigarettes to the inclosures, a guide adjacent to the mold wheel, means for folding and securing parts of the inclosures and coöperating with the mold wheel and guide, a stack having an expan-

sible and contractible operation and exerting a uniform pressure on the charged inclosures delivered to the stack to complete the said inclosures within the latter, and means for discharging the charged inclosures from the mold wheel through the guide into the lower portion of the stack.

32. In a machine for packaging cigarettes and other articles, the combination of a mold wheel having a step rotation and provided with pockets, mechanism for feeding blank inclosures to and shaping said inclosures in the pockets, mechanism for feeding charges of cigarettes to the inclosures in the pockets, a guide adjacent to the mold wheel, means for folding and securing parts of the inclosures and coöperating with the mold wheel and guide, means for discharging the charged inclosures from the mold wheel through the guide, and a stack into the lower portion of which the charged inclosures are successively introduced and elevated therethrough and finally liberated at the upper extremity of the stack, the stack having a movable operation under yielding pressure to gradually settle the inclosures therein relatively to the inclosures introduced in the lower portion thereof and exerting a uniform shaping pressure on the sides and ends of the inclosures, the successive inclosures exerting a pressure on the top and bottom portions of one anther.

33. In a machine for packaging cigarettes and other articles, the combination of a mold wheel having a step rotation and provided with pockets, mechanism for feeding blank inclosures to and shaping said inclosures in the pockets, mechanism for feeding charges of cigarettes to the inclosures in the pockets, a guide adjacent to the mold wheel, means for folding and securing parts of the inclosures, a stack embodying a movable section, the members of the stack being separated in diagonal direction and each comprising a side and end member, yielding pressure means engaging the members of the stack, and means for discharging the charged inclosures from the mold wheel through the guide into the lower portion of the stack.

34. In a machine for packaging cigarettes and other articles, the combination of a mold wheel having a rotation imparted thereto, mechanism for disposing inclosures in the mold wheel and charging the inclosures with cigarettes, means for folding and securing parts of the inclosures, an inclosure receiving stack having a removable member or section, yielding pressure devices movably connected to the fixed member of the stack and separably attachable to the movable member of the stack without modifying the predetermined pressure exerting force thereof, and mechanism for discharging the charged inclosures from the mold wheel into the lower portion of the stack and elevating the inclosures through the latter.

In testimony whereof I have hereunto set my hand in presence of two subscribing witnesses.

ROSS V. CRAGGS.

Witnesses:
CHAS. S. HYER,
CHAS. A. ROWE.