Sept. 14, 1954 T. K. CROSSLAND 2,688,881

RACK AND PINION GEARING

Filed Dec. 19, 1951

Fig. 1.

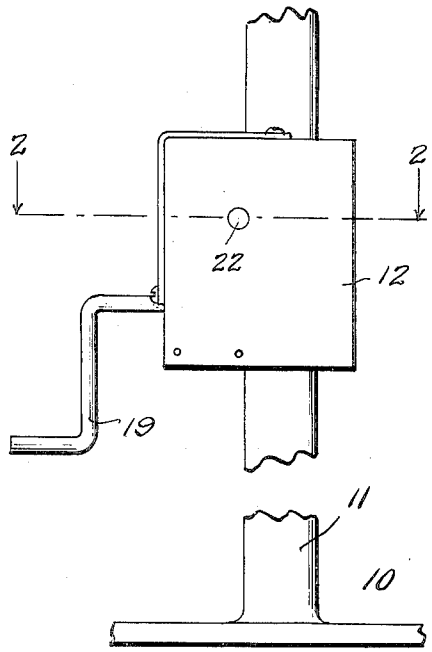

Fig. 3.

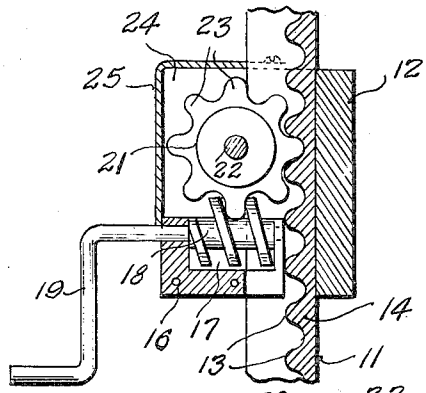

Fig. 6.

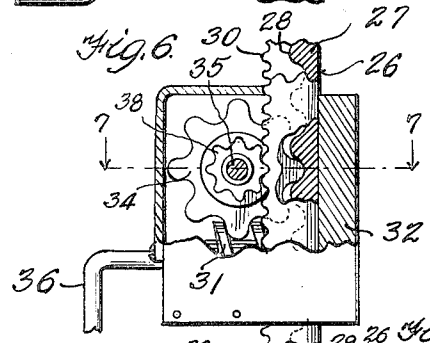

Fig. 2.

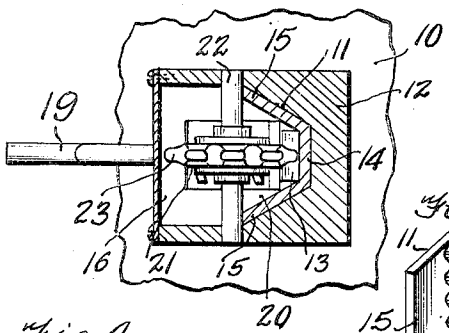

Fig. 5.

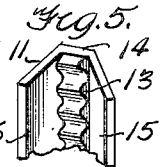

Fig. 4.

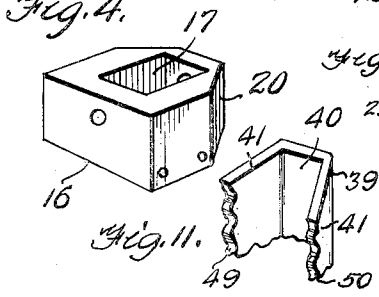

Fig. 8.

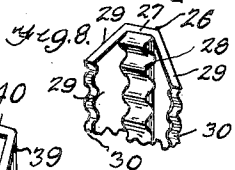

Fig. 7.

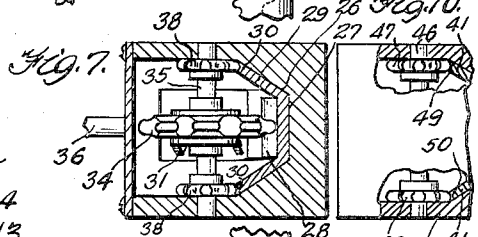

Fig. 10.

Fig. 9.

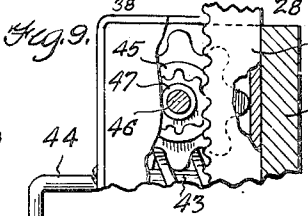

INVENTOR

THEODORE K. CROSSLAND

BY Irving A. McCathran

HIS ATTORNEY

Patented Sept. 14, 1954

2,688,881

UNITED STATES PATENT OFFICE

2,688,881

RACK AND PINION GEARING

Theodore K. Crossland, Corpus Christi, Tex., assignor to Major George Flynn, Corpus Christi, Tex.

Application December 19, 1951, Serial No. 262,380

1 Claim. (Cl. 74—412)

1

This invention relates to lifting jacks, and has for one of its objects the production of a simple and efficient means for facilitating the vertical adjustment of the carriage or lifting element, through the medium of a minimum number of parts which may be manufactured at a minimum expense.

Another object of the present invention is the production of a simple and efficient means for facilitating the adjustment of the carriage or lifting element upon the rack standard, which means includes a worm gear and a mating gear operated thereby and cut to permit the mating gear to operate along the center of the rack standard.

Other objects and advantages of the present invention will appear throughout the following specification and claim.

In the drawings:

Figure 1 is a side elevational view of the lifting jack;

Figure 2 is a horizontal sectional view taken on line 2—2 of Figure 1;

Figure 3 is a central vertical sectional view through the lifting element and rack standard;

Figure 4 is a perspective view of the worm gear supporting block;

Figure 5 is a fragmentary perspective view of the rack standard;

Figure 6 is a fragmentary central vertical sectional view of a modified form of lifting element and rack standard of the jack;

Figure 7 is a horizontal sectional view taken on line 7—7 of Figure 6;

Figure 8 is a fragmentary perspective view of the rack standard shown in Figure 7;

Figure 9 is a fragmentary vertical sectional view of a still further modified form of the invention;

Figure 10 is a fragmentary horizontal sectional view, partly in top plan, of the lifting element and rack standard of the form of the invention shown in Figure 9.

Figure 11 is a fragmentary perspective view of a further modified form of rack standard.

By referring to the drawing in detail, it will be seen that 10 designates the base which supports an upright rack standard 11. The standard 11 is substantially V-shaped in cross section, as is shown in Figure 2. A lifting element or housing 12 is slidably mounted upon the standard 11, and is provided with vertically spaced rack teeth 13 upon the inner face of the rear wall 14 of the standard 11. The standard 11 is provided with laterally flared vertical flanges 15 which are integral with the rear wall 14. The wall 14 and

2

flanges 15 preferably have sliding contact with the housing 12, as shown in Figure 2.

A worm screw supporting block 16 is fixed within the lower end of the housing 12 and is provided with a cavity 17 in which the worm screw 18 is journalled, as is shown in Figure 3. An actuating crank 19 is carried by the worm screw 18 for rotating the worm screw 18 in a conventional manner. The block 16 is provided with a tapering inner end 20 to extend into the rack standard 11 in the manner shown in Figures 2 and 3, to support the worm screw in a proper position as well as to brace the parts when assembled.

A mating gear 21 is carried by a transverse journal shaft 22, which shaft is carried by the side walls of the housing 12 and has abutting contact with the outer edges of the flared vertical flanges 15 to brace the flanges 15, as shown in Figure 2. The teeth 23 of the gear 21 taper outwardly and are specially formed with rounded outer ends, as shown in Figures 2 and 3, so as to co-act with the worm screw 18 and interfit therewith, and to also mesh with the teeth 13 of the rack standard 11 and operate along the vertical center of the rack standard 11. Note Figures 2 and 3. The housing 12 preferably is provided with a cavity 24 in which the gear 21 is rotatably mounted, and a removable cover plate 25 preferably closes the cavity as is shown in Figures 2 and 3.

As is shown, the gear 21 is mounted directly above the worm screw 18 in a position to extend into the substantially V-shaped or channelled rack standard 11 and to efficiently engage the rack teeth 13. In this way only the worm screw 18 and the single gear 21 is employed, the gear 21 constituting the medium between the rack teeth 13 and the worm screw 18. The present invention provides an efficient and sturdy jack having a minimum number of parts.

In Figures 6, 7 and 8 there is shown a modified form of the invention comprising a vertical rack standard 26, having a vertical rear wall 27 which carried a plurality of vertically spaced rounded teeth 28 upon its inner face. The standard 26 is provided with a pair of laterally flared flanges 29 similar to the rack standard 26. The outer edges of the flanges 29, however, are provided with vertically spaced rack teeth 30. An actuating worm screw 31 similar to the worm screw 18 is mounted within the lifting element or housing 32, the housing 32 being slidable upon the standard 26. A gear 34, similar to the gear 21, is carried by a shaft 35, which shaft 35 is journalled within the housing 32. This gear 34 meshes with the teeth

28 of the rack standard 26 and with the worm screw 31 to transmit lifting and lowering motion to the housing 32. An operating crank 36 actuates the worm screw 31. In this form of invention laterally spaced gears 37 and 38 are carried by the shaft 35 and mesh with the respective vertical rows of teeth 30 carried by the flange 29 of the rack standard 26. In this form of the invention, the gears 34, 37 and 38 engage the rack standard in place of the single gear 21 shown in Figure 3.

A further modified form of the invention is shown in Figures 9, 10 and 11, wherein a rack standard 39 is provided having a vertical rear wall 40 and a pair of vertical laterally flared walls 41. A lifting element or housing 42 is slidably mounted upon the standard 39. An actuating worm screw 43 similar to the worm screw 18, and operated by a crank 44 is carried by the housing 42. A gear 45, similar to the gear 21 is journalled on a transverse 46 which is carried by the housing 42. However, the gear 45 does not mesh with the standard 39, as is the case with the forms shown in Figures 3 and 6. The shaft 46 carries a pair of laterally spaced gears 47 and 48, which mesh with vertically spaced rack teeth 49 and 50 respectively, of the flange 41 of the rack standard 39.

It should be understood that certain detail changes may be made in the structural details of the present invention, within the spirit thereof, so long as these changes fall within the scope of the appended claim.

Having described the invention, what I claim as new is:

A lifting jack comprising a rack, a housing slidable on said rack, said rack having a channel longitudinally thereof, an actuating worm screw carried by said housing and projecting into said channel, said rack having a rear wall, forward flared longitudinal flanges carried by said rear wall and having outer edges, said rear wall having an inner face, vertically spaced transverse rack teeth carried by said inner face, an intermediate gear meshing with said worm screw, a transverse journal shaft carried by said housing and supporting said intermediate gear, said transverse shaft abutting the outer edges of said flanges to brace the same, and said intermediate gear engaging said rack teeth for raising and lowering said housing as said worm screw is rotated.

References Cited in the file of this patent

UNITED STATES PATENTS

Number	Name	Date
619,047	Mayer	Feb. 7, 1899
620,762	Field et al.	Mar. 7, 1899
779,633	Wustner	Jan. 10, 1905
944,360	Joseph	Dec. 28, 1909
1,731,859	Johnson	Oct. 15, 1929
2,397,965	Hunz	Apr. 9, 1946