OPIC
Office de la propriété intellectuelle du Canada

CIPO
Canadian Intellectual Property Office

(12) (19) (CA) **Brevet-Patent**

(11) (21) (C) **2,153,890**
(86) 1993/01/14
(87) 1994/07/21
(45) 2001/03/27

(72) Deetz, David W., US
(72) Morris, Russell L., US
(73) Diametrics Medical, Inc., US

(51) Int.Cl.[6] G01N 37/00, G01N 27/30, G01N 27/26, A61B 5/14, A01N 1/00

(54) **SYSTEME D'ETALONNAGE DES FLUIDES PERMETTANT UNE STABILISATION EN FONCTION DE LA TEMPERATURE**

(54) **TEMPERATURE STABILIZED FLUID CALIBRATION SYSTEM**

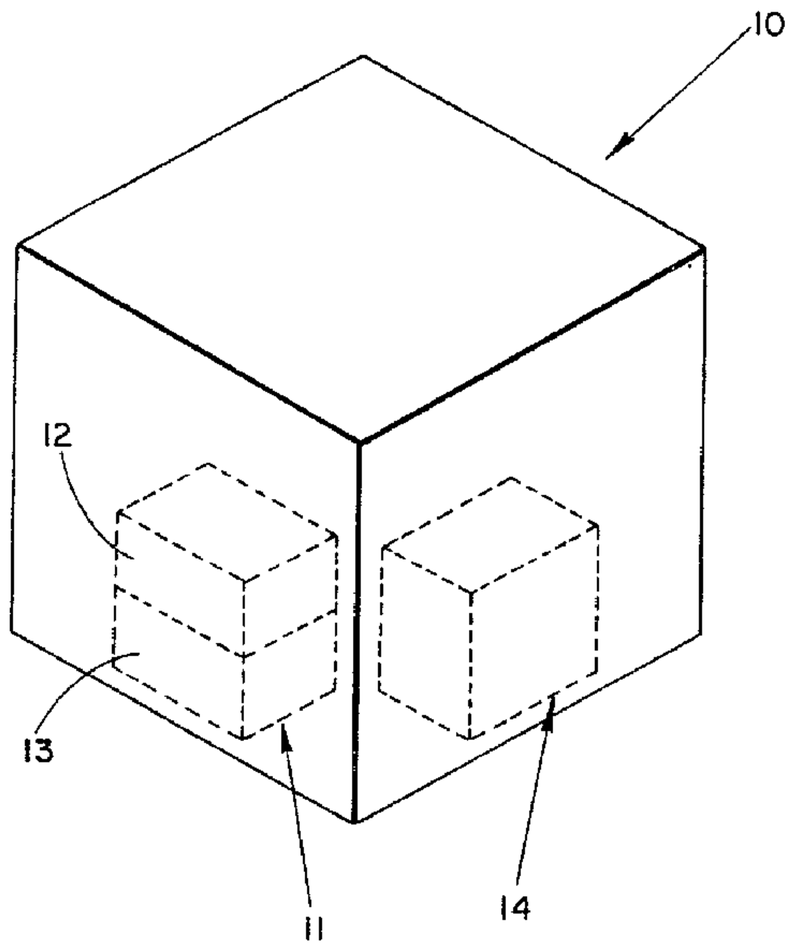

(57) L'invention concerne un procédé et un système pour déterminer la concentration d'une ou de plusieurs espèces gazeuses d'intérêt dans un milieu échantillon à l'intérieur d'une gamme de températures où on utilise une source dépendante de la température et indépendante de la variable temps d'une espèce gazeuse d'intérêt pour contrôler la pression partielle d'une ou de plusieurs espèces gazeuses d'intérêt contenues dans un milieu échantillon, de manière à ce que la concentration de l'espèce gazeuse d'intérêt dans le milieu échantillon reste sensiblement identique dans toute la gamme de températures. La source des espèces gazeuses d'intérêt comprend un réservoir contenant une quantité de l'espèce gazeuse d'intérêt sensible à la température. L'échantillon et le réservoir sont contenus dans des enceintes séparées imperméables aux fluides et perméables aux gaz, qui sont par ailleurs entourées par une enceinte commune imperméable aux gaz.

(57) A method and system for controlling the concentration of one or more gaseous species of interest in a sample medium throughout a range of temperatures in which a temperature related, time variable dominant independent source of the gaseous species of interest is used to control the partial pressure of one or more gaseous species of interest contained in the sample medium in a manner such that the concentration of the gaseous species of interest in the sample medium remains essentially the same over the temperature range. The source of the gaseous species of interest comprises a reservoir containing an amount of a temperature sensitive source of the gaseous species of interest. The sample and the reservoir are contained in separate fluid-tight, gas-permeable enclosures further confined by a common substantially gas-tight enclosure.

PCT WORLD INTELLECTUAL PROPERTY ORGANIZATION
International Bureau

INTERNATIONAL APPLICATION PUBLISHED UNDER THE PATENT COOPERATION TREATY (PCT)

(51) International Patent Classification 5 : G01N 31/00 — A1

(11) International Publication Number: WO 94/16323

(43) International Publication Date: 21 July 1994 (21.07.94)

(21) International Application Number: PCT/US93/00255

(22) International Filing Date: 14 January 1993 (14.01.93)

(71) Applicant: DIAMETRICS MEDICAL, INC. [US/US]; 2658 Patton Road, Roseville, MN 55113 (US).

(72) Inventors: DEETZ, David, W.; 2 Robb Farm Road, North Oaks, MN 55127 (US). MORRIS, Russell, L.; 2145 Niles Avenue, St. Paul, MN 55116 (US).

(74) Agent: MERSEREAU, C., G.; Haugen and Nikolai, 820 International Centre, 900 Second Avenue South, Minneapolis, MN 55402 (US).

(81) Designated States: AU, CA, JP, KR, European patent (AT, BE, CH, DE, DK, ES, FR, GB, GR, IE, IT, LU, MC, NL, PT, SE).

Published
With international search report.
With amended claims and statement.

2153890

(54) Title: TEMPERATURE STABILIZED FLUID CALIBRATION SYSTEM

(57) Abstract

A method and system for controlling the concentration of one or more gaseous species of interest in a sample medium throughout a range of temperatures in which a temperature related, time variable dominant independent source of the gaseous species of interest is used to control the partial pressure of one or more gaseous species of interest contained in the sample medium in a manner such that the concentration of the gaseous species of interest in the sample medium remains essentially the same over the temperature range. The source of the gaseous species of interest comprises a reservoir containing an amount of a temperature sensitive source of the gaseous species of interest. The sample and the reservoir are contained in separate fluid-tight, gas-permeable enclosures further confined by a common substantially gas-tight enclosure.

TEMPERATURE STABILIZED FLUID CALIBRATION SYSTEM

BACKGROUND OF THE INVENTION

I. Field of the Invention

The present invention is directed generally to a packaged, temperature stabilized reference or calibration system and, more particularly, to a method and system for stabilizing the concentration of a dissolved gaseous species of interest in a calibration sample medium by the provision of a reversible compensating reservoir or independent temperature dependent source of the dissolved species of interest which compensates the temperature dependency in the sample medium over the useful temperature range of the system.

II. Description of the Related Art

The field of diagnostic medicine is fast becoming more sophisticated and complex. The ability to make rapid or immediate diagnostic determinations characteristic of the current condition of a patient so that the proper emergency steps may be taken in a timely manner to improve or stabilize the condition of the patient, for example, during surgery or during the treatment of traumatic injury has become very important. The partial pressures of oxygen (PO_2) and carbon dioxide (PCO_2) in the blood are examples of extremely important instantaneous indications of respiratory deficiency, efficiency of inhalation therapy, renal function and other vital bodily processes. These measurements are made utilizing stationary clinical laboratory instruments which measure the parameters at a specific temperature and which are periodically calibrated to operate by a calibration system which is accurate only at a specific temperature. Calibration and use of the instruments are thus keyed to opening the calibration fluid, calibrating the instrument, and operating the instrument at a specific known temperature, e.g., 37°C. The specific composition of typical control or calibration fluid systems is such that the reference or known

equilibrium partial pressures of oxygen and carbon dioxide are temperature dependent and so occur only at the specific calibration temperature, and opening or using the calibration system at a temperature other than the designed temperature may introduce a decided amount of error into the readings. Alternatively, gaseous CO_2 and O_2 can be used to calibrate the instrument, but that requires the need for compressed gas cylinders for storage of the gases.

A definite need exists for a calibration system which is small, easily portable and less temperature dependent to thereby enable the calibration of such devices as diagnostic systems of the class described to be accurately accomplished over a reasonable range of ambient temperatures. This, of course, applies to the temperature stabilization of the amount of contained dissolved or dissociated gaseous species of interest in a variety of media for a variety of applications. In this regard, particularly with respect to oxygen, one approach that has been used involves the use of relatively inert fluids which have the ability to dissolve rather large amounts of oxygen and which are stable with respect to biological media. One class of such compounds consists of fluorinated organic compounds known as perfluorocarbons. Certain other systems or approaches have been proposed to stabilize and buffer the partial pressure of species such as carbon dioxide, normally in an aqueous phase, which, when combined, may be emulsified with the perfluorocarbon phase.

In U.S. Patent 5,231,030 assigned to the same assignee as the present invention, one approach is disclosed in which a perfluorocarbon-based system is used which contains sufficient perfluorocarbon to give it ability to remain stable with respect to the relative concentration of dissolved oxygen over a range of ambient temperatures for example, between about 20°C and 30°C. An aqueous solution phase, which contains a

specific amount of one or more CO_2 complexing agents, such as ethylene diamine, HCO_3^-, Ca++ and OH^-, or the like, as agents to buffer the partial pressure of carbon dioxide in the aqueous phase is used to reduce sensitivity to changes in temperature with respect to complexed CO_2. To the extent any information is deemed necessary to the proper completion or explanation with regard to material contained in the present application.

The present invention involves a simple and accurate method for reversibly controlling the partial pressure of a contained dissolved or dissociated gaseous species of interest in a medium which exhibits time/temperature stability that would be applicable to a species such as carbon dioxide. Thus, for example, the design of a prepackaged calibrate system which is usable to quickly and accurately calibrate an instrument over a range of ambient temperatures is now possible.

SUMMARY OF THE INVENTION

The present invention provides a method of controlling the concentration of a gaseous species of interest in a reference medium as a predetermined function of temperature throughout a selected temperature range comprising steps of: separating the reference medium containing the gaseous species of interest in a gas-permeable reference enclosure; providing a separate temperature dependent source of the gaseous species of interest comprising a reservoir containing the gaseous species of interest outside but in communication with the gas-permeable reference enclosure, the reservoir comprising a reservoir medium containing the gaseous species of interest maintained in a manner that provides a temperature sensitive source of amounts of the gaseous species of interest; enclosing the reference medium and the source in a

substantially gas-tight hollow structure in the form of a common enclosure for both the reference enclosure and the reservoir surrounded by a gas phase that forms a common atmosphere; and formulating a temperature dependence in the reservoir to respond more rapidly to changes in temperature than that of the reference medium such that the partial pressure of the gaseous species of interest contacting an outer surface of the gas-permeable reference enclosure varies more quickly as a function of temperature than that of the reference medium, in turn, to cause the concentration of the gaseous species of interest in the reference medium to vary according to a desired function of temperature over a selected temperature range.

The present invention also provides a method of controlling the concentration of a gaseous species of interest in a reference medium essentially as a predetermined function of time variable temperature or substantially constant throughout a range of time variable temperatures comprising steps of: separating the reference medium containing an amount of the gaseous species of interest by a gas-permeable reference enclosure means; providing a separate temperature dependent source of the gaseous species of interest comprising a gas-permeable reservoir enclosure having a reservoir medium containing an amount of the gaseous species of interest; providing a substantially gas-tight hollow structure in the form of a common enclosure for containing both the reference enclosure and the reservoir enclosure surrounded by a gas phase that forms a common atmosphere; formulating the reservoir and the contents thereof in a manner such that changes in temperature-related equilibrium solubility of the species of interest in the reservoir medium produce an exchange of amounts of the species of interest to and from the common atmosphere thereby changing the concentration of the species of interest

in the common atmosphere contacting the gas-permeable reference enclosure means in a manner that is more rapid than the corresponding concentration changes within the reference medium such that the common atmosphere controls changes in equilibrium concentration of the gaseous species of interest within the reference medium and such that the partial pressure of the gaseous species of interest in the common atmosphere contacting the gas-permeable reference enclosure means thereby dominates, as a function of temperature, with the concentration of the gaseous species of interest in the reference medium remaining essentially controlled according to the desired function of temperature over the selected temperature range.

The present invention further provides a method of maintaining the concentration of a gaseous species of interest in a reference medium confined in a gas-permeable reference enclosure substantially constant in a selected time variable temperature range comprising steps of: confining the reference medium containing the gaseous species of interest in a gas-permeable reference enclosure; providing a separate source of the gaseous species of interest comprising a reservoir having a reservoir medium containing a temperature dependent amount of the gaseous species of interest confined in a gas-permeable reservoir enclosure; enclosing the reference medium and the source in a substantially gas-tight hollow structure in the form of a common enclosure for containing both the reference enclosure and the reservoir enclosure surrounded by a common atmosphere; constructing the reservoir and formulating contents thereof in a manner such that changes in the temperature related equilibrium partial pressure of the gaseous species of interest in the reservoir enclosure occur more quickly than in the reference medium and thereby changing the concentration of the species of interest in the common atmosphere contacting the outer surface of the gas-permeable reference enclosure so that

the partial pressure of the gaseous species of interest in the common atmosphere dominates as a function of temperature in a manner in which the concentration of the gaseous species of interest in the reference medium remains essentially constant over the selected temperature range.

From another aspect, the invention provides a packaged multi-phase reference system containing controlled amounts of at least one gaseous species of interest comprising: a reference medium containing known reference concentrations of each gaseous species of interest; a gas-permeable reference enclosure retaining the reference medium containing the gaseous species of interest; a separate temperature dependent source of the gaseous species of interest comprising a reservoir having a reservoir medium containing an amount of the gaseous species of interest in gas-permeable relation to the reference medium; a substantially gas-tight hollow structure in the form of a common enclosure for containing both the reference enclosure and the reservoir surrounded by a gas phase that forms a common atmosphere; wherein the reservoir functions to vary the partial pressure of the gaseous species of interest in the common atmosphere more rapidly as a function of temperature than the partial pressure of the gas of interest varies in the reference medium such that the reference concentration of the gaseous species of interest in the reference medium is caused to vary according to a desired function of temperature over a selected temperature range as controlled by the common atmosphere.

In accordance with the present invention, it has been found possible to create a packaged system that can be used to provide a stable concentration of a gas in a sample medium despite changes in the temperature of the sample within a reasonable range of ambient temperature. The system involves the use of an additional separate reversible equilibrium compensating source containing an amount of the gas or gases of

interest. The additional source or "reservoir" provides the ability to control changes in the partial pressure of the gas or gases of interest in the atmosphere of the package including the atmosphere contacting the sample liquid. The changes in partial pressure can be tailored to exactly compensate for changes in the solubility of the gas or gases of interest in the calibration sample over a designed range. The system can also be used to control change in the partial pressure of a species of interest as a function of temperature change.

Both the sample medium enclosure and the reservoir are contained in liquid-tight, gas-permeable enclosures within

an outer, common enclosure such that gaseous species may be exchanged with respect to the common atmosphere of the sealed outer enclosure. The reservoir equilibrium is designed to be more temperature dependent and its enclosure more permeable for the gas(es) of interest than the sample and, therefore, to react more quickly to temperature changes and thus to dominate changes produced in the sample container. Temperature changes which produce an increase or decrease in the partial pressure of a species of interest in the reservoir medium will cause a corresponding increase or decrease in the partial pressure of that species in the common atmosphere. This, in turn, anticipates and compensates changes that otherwise would occur thereafter in the sample.

In operation, using the general case as an example, as the temperature of the environment and thus of the entire package including the sample and reservoir rises, the solubility of the gaseous species of interest in the sample decreases. This also occurs in the reservoir. To keep the concentration of the gas or gases of interest from changing in the sample, the reservoir expels amounts of the gas or gases into the package atmosphere anticipating the reaction of the sample by raising the partial pressures of these gases in the common atmosphere and thereby preempting the thermodynamic driving force for the gases to leave through the permeable shell of the sample container. In other words, the gas or gases of interest are preferably released and permeate the shell of the reservoir and increase the partial pressure of these species in the package atmosphere at a somewhat faster rate than they are lost from the sample medium such that the thermodynamic driving force for the gases to leave the sample and diffuse through the wall of the sample enclosure is eliminated. Conversely, if the system cools and the solubility of the gases of interest in the sample medium increases, the reservoir acts to reverse the phenomena of the heating mode and be reabsorbed into the reservoir medium from the package atmosphere at a

somewhat faster rate than the reabsorption in the sample medium thereby lowering the partial pressure of the gas or gases of interest in the common atmosphere to eliminate any driving force for the gas or gases of interest in the common atmosphere to permeate the sample enclosure and dissolve in the sample medium. This preserves the resulting concentration of each such species of interest in the sample medium regardless of the direction of temperature change within a designed limited ambient temperature range.

Typically, the sample medium and/or the reservoir medium are solutions of selective solvents with or without complexing agents or buffers. In the case where CO_2 is the species of interest, both the reservoir and the sample media may be aqueous solutions of CO_2. A system where the sample pH is 7.4 and the reservoir is buffered to a pH of 8.6, for example, exhibits good temperature/concentration or (pCO_2) stability in the 20°C to 30°C range; but (pCO_2) is quite temperature dependent for a reservoir pH above 9.0. The invention, however, is not limited to the use of solutions as media. Gels or even solids exhibiting the properties required with respect to taking on and giving up the gaseous species can be employed. Gels may be based on natural materials such as collagen or agarose or based on synthetic materials such as polymers of a desired average molecular weight. Solids may include higher average molecular weight polymers or other materials which reversibly accept the species of interest. Of course, the sample medium may differ from or be the same type of medium as that of the reservoir. The material may undergo a phase change such as liquification at a temperature just above ambient.

In a preferred embodiment, the typical environment of the invention is a sealed package, which might be a flexible poly-foil pouch, gas-filled, but not pressurized above atmospheric pressure, provided in which the sample or calibration medium is contained in a separate enclosure

within the pouch such as a sealed, gas-permeable polymeric container. An additional liquid-tight, gas-permeable enclosure is provided in the form of the reservoir containing the reversibly available additional amount or amounts of the gas or gases of interest.

BRIEF DESCRIPTION OF THE DRAWINGS

In the drawings, wherein like numerals are utilized to designate like parts throughout the same:

FIGURE 1 is a graphical representation of the partial pressure of carbon dioxide (pCO_2) of the sample medium, measured at 37°C vs. the temperature of the sample when it was removed from the package, for a system with and without a compensating reservoir;

FIGURE 2 is a graphical representation of the pH of the sample medium measured at 37°C vs. the temperature of the sample when it was removed from the package, for a similar system to that of Figure 1 with and without a compensating reservoir;

FIGURE 3 represents a theoretical response surface based on thermodynamic properties of the species of interest CO_2 in which the pCO_2 of the sample medium analyzed at 37°C is plotted with respect to the temperature of the sample at which it was removed from the package and one of the variables associated with the reservoir in the package, namely, the reservoir pH,; and

FIGURE 4 is a schematic representation of a possible system construction.

DETAILED DESCRIPTION

It will be appreciated that the concepts of the present invention can be modeled from thermodynamic principles for gaseous species and solutions of known reversible solubilities and permeabilites. As an example, the preferred or illustrative embodiment of this detailed description contemplates a system in which the gas carbon dioxide (CO_2) is the dissolved or complexed calibration species of interest, the concentration of which is sought to be controlled. The CO_2 is normally contained in a buffered aqueous solution which, for blood gas calibration or control, is used together with an amount of a perfluorocarbon-based medium containing oxygen, sealed in a rather slender sample tube in which the two phases are in intimate contact but do not mix. The sample tube which may be Tygon® (trademark of Norton Company of Worcester Mass. USA) is further contained in a poly-foil substantially gas-tight, flexible pouch. The pouch is one which describes a flexible package which may be layered polyethylene with an aluminum foil layer or layers to provide a substantially gas-tight system with an internal pressure about equal to the external atmospheric pressure but not inflated above it, as is the case with a balloon. Of course, the system could also be designed using a rigid wall container such as a glass ampule as the package.

The aqueous sample is typically 500 micro-liters of an aqueous phosphate buffer at pH 7.4. A larger, possibly 5 ml, bicarbonate and carbonate containing aqueous solution in the pH range of 8.0 to 9.0 is also in the package in a separate liquid-tight gas-permeable sealed bag made of polyethylene or other gas-permeable material to serve as the reservoir. The reservoir solution may also contain a buffer salt to give it a more temperature dependent pH. As the temperature of the

system of this embodiment increases, the pH of the reservoir decreases, and this, in combination with the decrease in the solubility of CO_2 in the warmer medium, shifts the equilibrium of the CO_2 system consisting of the reservoir and the common or package environment toward a higher partial pressure of CO_2 in the package atmosphere. The increase in package partial pressure prevents the sample from losing CO_2 to the gas phase of the package environment through the Tygon™ tube. Conversely, if the temperature of the package is decreased, the pH of the reservoir and the solubility of CO_2 in the reservoir will increase at a greater rate than that in the sample. This will lead to a lower partial pressure of CO_2 in the common atmosphere or gas phase of package in relation to that of

2153890

equilibrium in the sample such that CO_2 will not have a tendency to migrate from the package into the sample. Thus, regardless of the direction of the temperature change, the resulting concentration of CO_2 in the sample will not change with changing temperature over the selected range.

In an alternate embodiment, the temperature dependence of the solubility of CO_2 in the reservoir medium can be utilized without the additional effect of the temperature dependence of the pH of the reservoir solution. It is necessary, however, that the capacity of the reservoir for the gas be greater than that of the sample to insure that the reservoir will lead and dominate the gas phase of the package throughout the temperature range of interest. Whatever the thermodynamic temperature dependent property or properties selected as the criteria for the reservoir is, the basic kinetic requirement for the system remains that the reservoir needs to respond somewhat faster to the changes in temperature than the sample environment. This can be based on relative volumes, composition, relatively solubilities of the gas or gases of interest in the reservoir and in the sample, pH control, or even the utilization of different permeabilities with respect to the sample and reservoir enclosures such that the gas or gases of interest diffuse in and out of the reservoir enclosure at a higher rate than they do with respect to the sample container. It will further be appreciated that separate internal containers may be provided for each calibration species if desired or that all of them may be contained in a single solution or emulsion to address a particular application of the concept.

Systems formulated in accordance with the teachings of the present invention can be formulated to exhibit stable overall concentrations with respect to the gases of interest within a range of ambient temperatures, such as between about 20°C and 30°C. In practical terms, this means, for example, that a sample calibration system can be

opened and exposed to the ambient environment at any temperature within that range and used within a reasonable time without fear of calibration inaccuracy. Thus, in accordance with the present invention, the equilibrium solubility of any volatile constituent of a solution at a given temperature can be artificially controlled by compensating for anticipated changes in the partial pressure of that constituent in the vapor phase above the solvent medium in relation to the effects of temperature. The invention provides a means of offsetting the extreme temperature sensitivity of critical concentrations of dissolved gaseous species in liquids, gels or solids.

In accordance with the illustrative embodiment, the dissolved species of interest is exemplified by carbon dioxide (CO_2) and its relation to temperature and pH in an aqueous solution. It is contemplated, however, that such principles can be extended by those skilled in the art to produce similar results with respect to many other gaseous species of interest in the same and other types of solutions.

One environment of the system is shown generally in Figure 4 and includes an outer enclosure or package designated by 10 which may be a flexible pouch-type package of poly-foil which has an internal pressure about equal to atmospheric pressure and which is generally impervious to the passage of gases, especially atmospheric molecules including nitrogen, oxygen and carbon dioxide. The package 10 contains a further enclosed sample reservoir, shown generally at 11, which, in turn, contains separate liquid calibration solutions or phases 12 and 13 in intimate contact but not emulsified or mixed. In this respect, phase 12 may contain oxygen reversibly dissolved in a perfluorocarbon substance operating as a source of O_2 in the calibration system. Typically, for blood gas analysis, for example, the pO_2 is in the range of 10 to approximately 200 mm Hg. The phase 12, then, is an amount of CO_2 in reversible equilibrium with water which may contain certain

additives, and typically contains a phosphate buffer which establishes the solution at about pH 7.4. The preferred range of partial pressures for CO_2 (pCO_2) is from about 5 to about 100 mm Hg. The volumes for the calibration solutions are typically 500 micro-liters (µl). The envelope or ampule 10 further contains an additional separate enclosure in the form of a polyethylene reservoir, or the like, 14. The reservoir is typically much larger volume, e.g., 5 milliliters (ml) v. 500 µl of a bicarbonate and carbonate containing aqueous solution buffered in the pH range of about 8.0 to 9.0. It serves as a comparatively large reservoir of carbon dioxide. The reservoir solution may also contain a buffer salt which produces a temperature dependent pH in the reservoir.

The reservoir container enclosure 14 should have a higher permeability for the CO_2 or other gaseous species of interest than the sample envelope 11 so that the relative partial pressure of the species of interest in the envelope 10 outside of both internal containers is dominated both in terms of size and time by the reaction of the material in the reservoir 14 rather than that in the sample tube 11. As recited above, the general thermodynamic design of the compensating system is such that as the temperature of the package and the aqueous sample solution 13 increases and the solubility of the CO_2 in the sample decreases the reservoir 14 expels CO_2 gas into the package atmosphere raising the partial pressure of the CO_2 in the package atmosphere and thereby eliminating the compositional thermodynamic driving force for CO_2 to leave the sample enclosure 13. Conversely, when the system is cooled, the reservoir reverses its action and receives CO_2 gas from the package atmosphere thereby lowering the partial pressure of the CO_2 in the package and eliminating

any driving force for CO_2 in the package atmosphere to dissolve in the sample.

So long as the operation of the reservoir system dominates the atmosphere of the package, both in terms of size and time, the system functions very well. This is

depicted in Figure 1 where it shows an almost constant pCO_2 for data points in the range of about 15°C to 30°C utilizing the reservoir and illustrates the sharp contrast or radical change in pCO_2 without the reservoir. Likewise, Figure 2 illustrates the same principle with respect to pH over the same temperature range. Without the reservoir, the pH is seen to increase with the loss of CO_2 from the solution as the temperature is raised from 15°C to 30°C.

Concepts of the present invention further represented as a mathematical model for a CO_2 system from known thermodynamic data are shown in the form of the complex surface generated in Figure 3. That Figure represents a system with 500 micro-liters of buffered aqueous as the calibration sample and 5 ml of reservoir at a higher pH (approximately 8.5 vs. 7.4). The other two axes represent the temperature at which the package was theoretically opened and the pCO_2 of the sample when analyzed at 37°C. The plot suggests that the pH of the reservoir significantly affects the pCO_2 of the sample at the analysis temperature. A pH in the 8.5 range in the reservoir appears to eliminate the temperature dependence of the pCO_2 in the sample, while it is clear that systems with reservoir pHs of 7 or 10, for example, obviously show temperature dependent pCO_2 values.

It is now possible to design a system, for example, that as the temperature of the system increases, the pH of the reservoir decreases and this, in combination with a decrease in the solubility of CO_2 in the reservoir shifts the equilibrium of the CO_2 system consisting of the reservoir and the package environment toward a much higher partial pressure CO_2 in the package. This increase in partial pressure prevents the sample from losing CO_2 to the gas phase. If the temperature of the package is thereafter decreased, the pH of the reservoir and the solubility of CO_2 in the reservoir increase, lowering the partial pressure of CO_2 in the common gas phase. Regardless of the direction of temperature change, then, the resulting concentration of CO_2

in the sample does not change with changing temperature.

If the reservoir does not dominate the sample in terms of time rate of change, the concentration of CO_2 in the sample may not be at its equilibrium value shortly after a temperature change. It will return to the desired level only after the entire system including the gas phase, the sample and the reservoir have reestablished equilibrium at the new temperature.

A successful system can also be designed which makes use of the temperature dependence on the solubility of CO_2 in the reservoir only and in which the pH of the reservoir need not be temperature dependent. The principles can also be adapted for use in systems having a plurality of dissolved gases, the partial pressure of one or more of which are sought to be controlled. This may include a plurality of samples and a plurality of compensating reservoirs in a single envelope. Of course, concentration, additives and buffers can be designed and tailored specifically to one's needs in such a situation. Additional parameters which may be varied in accordance with the principles of the invention include the volume of the gas phase in the envelope, the relative volume and composition of the reservoir, solubility of gas in the reservoir, composition of the sample, and the solubility of gas in the sample.

This invention has been described in this application in considerable detail in order to comply with the Patent Statutes and to provide those skilled in the art with the information needed to apply the novel principles and to construct and use such specialized components as are required. However, it is to be further understood that the invention can be carried out by specifically different equipment and devices and that various modifications can be accomplished without departing from the scope of the invention itself.

THE EMBODIMENTS OF THE INVENTION IN WHICH AN EXCLUSIVE PROPERTY OR PRIVILEGE IS CLAIMED ARE DEFINED AS FOLLOWS:

1. A method of controlling the concentration of a gaseous species of interest in a reference medium as a predetermined function of temperature throughout a selected temperature range comprising steps of:

separating the reference medium containing the gaseous species of interest in a gas-permeable reference enclosure;

providing a separate temperature dependent source of the gaseous species of interest comprising a reservoir containing the gaseous species of interest outside but in communication with the gas-permeable reference enclosure, the reservoir comprising a reservoir medium containing the gaseous species of interest maintained in a manner that provides a temperature sensitive source of amounts of the gaseous species of interest;

enclosing the reference medium and the source in a substantially gas-tight hollow structure in the form of a common enclosure for both the reference enclosure and the reservoir surrounded by a gas phase that forms a common atmosphere; and

formulating a temperature dependence in the reservoir to respond more rapidly to changes in temperature than that of the reference medium such that the partial pressure of the gaseous species of interest contacting an outer surface of the gas-permeable reference enclosure varies more quickly as a function of temperature than that of the reference medium, in turn, to cause the

concentration of the gaseous species of interest in the reference medium to vary according to a desired function of temperature over a selected temperature range.

2. The method of claim 1 wherein the reservoir is formulated such that the partial pressure of the gaseous species of interest varies in a manner which preempts changes in partial pressure of the gaseous species of interest within the reference enclosure to sufficiently keep the concentration of the species of interest in the reference medium within the reference enclosure substantially constant over the selected temperature range.

3. A method of controlling the concentration of a gaseous species of interest in a reference medium essentially as a predetermined function of time variable temperature or substantially constant throughout a range of time variable temperatures comprising steps of:

separating the reference medium containing an amount of the gaseous species of interest by a gas-permeable reference enclosure means;

providing a separate temperature dependent source of the gaseous species of interest comprising a gas-permeable reservoir enclosure having a reservoir medium containing an amount of the gaseous species of interest;

providing a substantially gas-tight hollow structure in the form of a common enclosure for containing both the reference enclosure and the reservoir enclosure surrounded by a gas phase that forms a common atmosphere;

formulating the reservoir and the contents thereof in a manner such that changes in temperature-related equilibrium solubility of the species of interest in the reservoir medium

produce an exchange of amounts of the species of interest to and from the common atmosphere thereby changing the concentration of the species of interest in the common atmosphere contacting the gas-permeable reference enclosure means in a manner that is more rapid than the corresponding concentration changes within the reference medium such that the common atmosphere controls changes in equilibrium concentration of the gaseous species of interest within the reference medium and such that the partial pressure of the gaseous species of interest in the common atmosphere contacting the gas-permeable reference enclosure means thereby dominates, as a function of temperature, with the concentration of the gaseous species of interest in the reference medium remaining essentially controlled according to the desired function of temperature over the selected temperature range.

4. The method of claim 3 wherein the gas-permeable reference enclosure means comprises, at least in part, a gelled solvent for the gaseous species of interest.

5. The method of claim 3 wherein control by the reservoir is based on the existence of one or more conditions selected from the group consisting of a higher permeability of the reservoir enclosure to the gaseous species of interest, more rapid changes in the solubility of the species of interest in the reservoir enclosure with respect to given changes in temperature, higher rate of change in the solubility of the species of interest in the reservoir enclosure in relation to given changes in temperature, and a reservoir volume larger, than that of the reference medium.

6. The method of claim 3 wherein the concentration of the gaseous species in the reference medium is held essentially constant over the selected temperature range.

7. The method of claim 3 wherein the reference medium and the reservoir medium are selected from the group consisting of liquids, gels and solids, with or without buffers or complexing agents.

8. The method of claim 3 wherein the reference medium and the reservoir medium contain liquid solvents for the species of interest.

9. The method of claim 3 further comprising the step of controlling the concentration of a plurality of gaseous species of interest.

10. The method of claim 3 wherein the concentration of the species of interest changes more rapidly in the reservoir enclosure than in the reference enclosure in response to a temperature change in the selected temperature range.

11. The method of claim 3 wherein the solubility of the species of interest in the reservoir enclosure exhibits a greater change in relation to given changes in temperature than that in the reference medium in the selected temperature range.

12. The method of claim 3 wherein the reservoir volume exceeds the sample volume.

13. The method of claim 3 wherein the species of interest is carbon dioxide (CO_2).

14. The method of claim 13 wherein the reservoir medium is an aqueous medium having a pH $\geq$ 8.0 and the sample medium is an aqueous medium with a pH $\leq$ 7.7.

15. The method of claim 6 wherein the species of interest is carbon dioxide (CO_2).

16. The method of claim 15 wherein the reservoir medium is an aqueous medium having a pH ≥ 8.0 and the sample medium is an aqueous medium with a pH ≤ 7.7.

17. A method of maintaining the concentration of a gaseous species of interest in a reference medium confined in a gas-permeable reference enclosure substantially constant in a selected time variable temperature range comprising steps of:

confining the reference medium containing the gaseous species of interest in a gas-permeable reference enclosure;

providing a separate source of the gaseous species of interest comprising a reservoir having a reservoir medium containing a temperature dependent amount of the gaseous species of interest confined in a gas-permeable reservoir enclosure;

enclosing the reference medium and the source in a substantially gas-tight hollow structure in the form of a common enclosure for containing both the reference enclosure and the reservoir enclosure surrounded by a common atmosphere;

constructing the reservoir and formulating contents thereof in a manner such that changes in the temperature related equilibrium partial pressure of the gaseous species of interest in the reservoir enclosure occur more quickly than in the reference medium and thereby changing the concentration of the species of interest in the common atmosphere contacting the outer surface of the gas-permeable reference enclosure so that the partial pressure of the gaseous species of interest in the common atmosphere dominates as a function of temperature in a manner in which the concentration of the gaseous species of interest in the reference medium remains essentially constant over the selected temperature range.

69841-25

18. A packaged multi-phase reference system containing controlled amounts of at least one gaseous species of interest comprising:

a reference medium containing known reference concentrations of each gaseous species of interest;

a gas-permeable reference enclosure retaining the reference medium containing the gaseous species of interest;

a separate temperature dependent source of the gaseous species of interest comprising a reservoir having a reservoir medium containing an amount of the gaseous species of interest in gas-permeable relation to the reference medium;

a substantially gas-tight hollow structure in the form of a common enclosure for containing both the reference enclosure and the reservoir surrounded by a gas phase that forms a common atmosphere;

wherein the reservoir functions to vary the partial pressure of the gaseous species of interest in the common atmosphere more rapidly as a function of temperature than the partial pressure of the gas of interest varies in the reference medium such that the reference concentration of the gaseous species of interest in the reference medium is caused to vary according to a desired function of temperature over a selected temperature range as controlled by the common atmosphere.

SMART & BIGGAR

OTTAWA, CANADA

PATENT AGENTS

2153890

Fig.-1

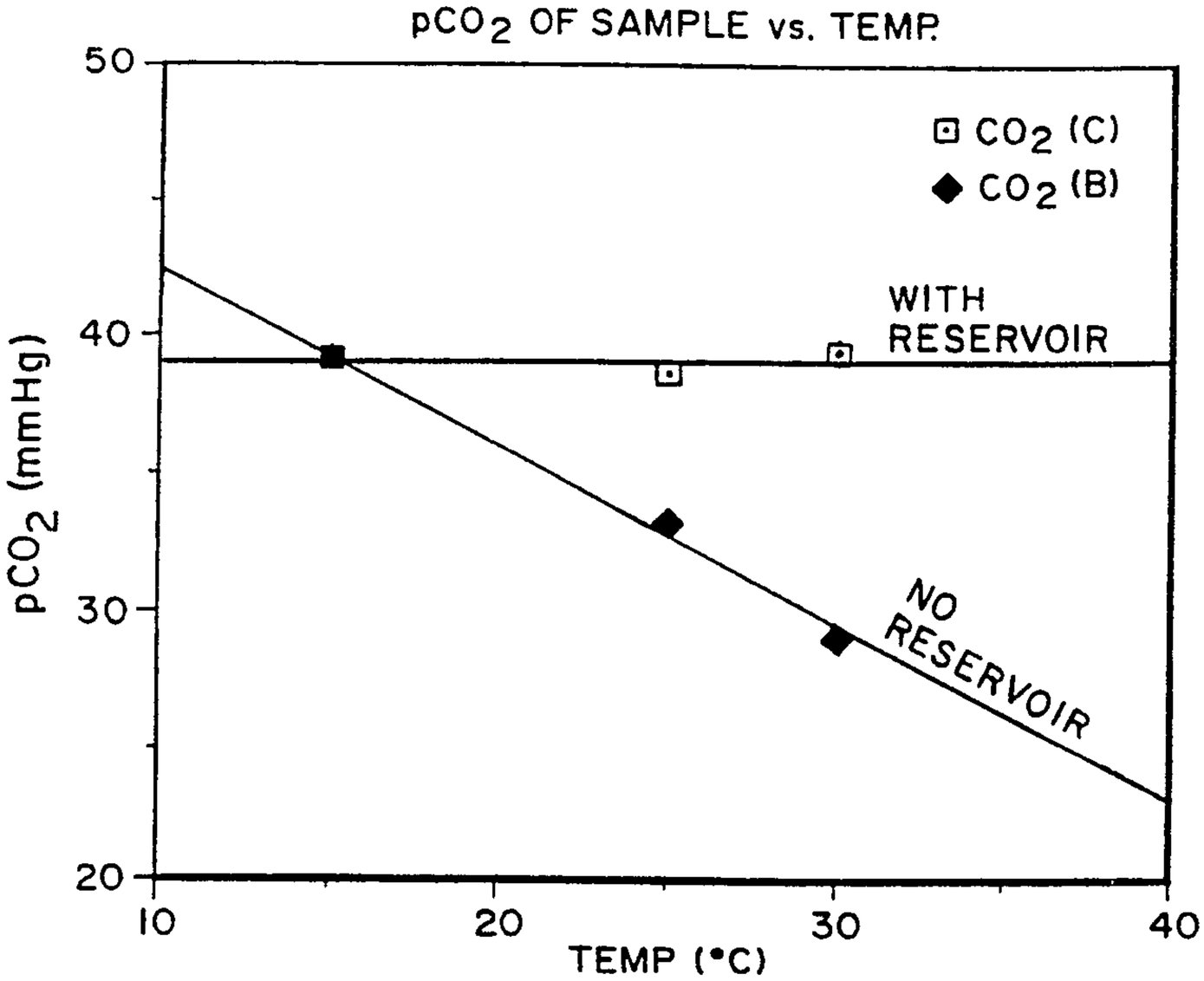

Fig.-2

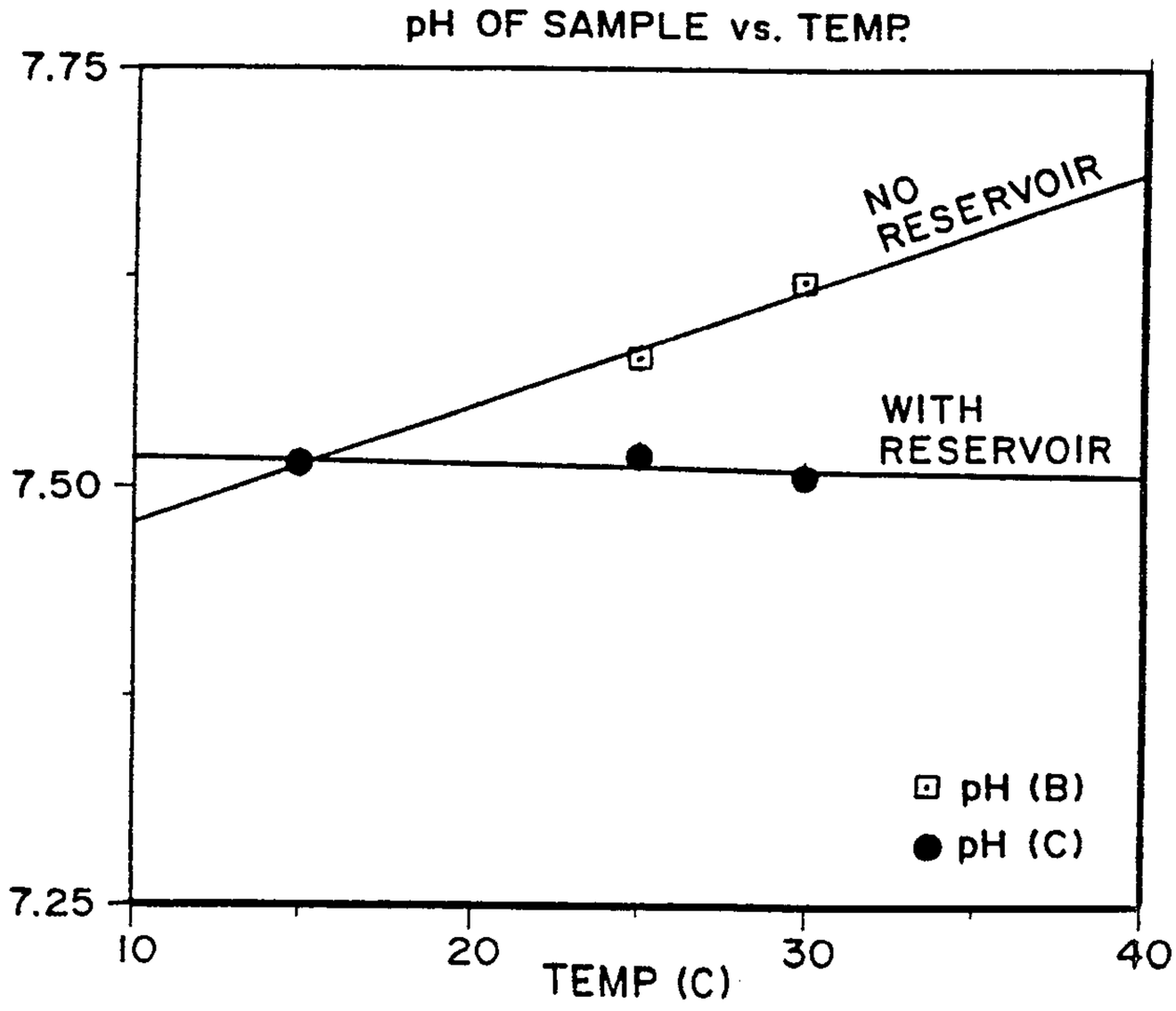

Fig.-3

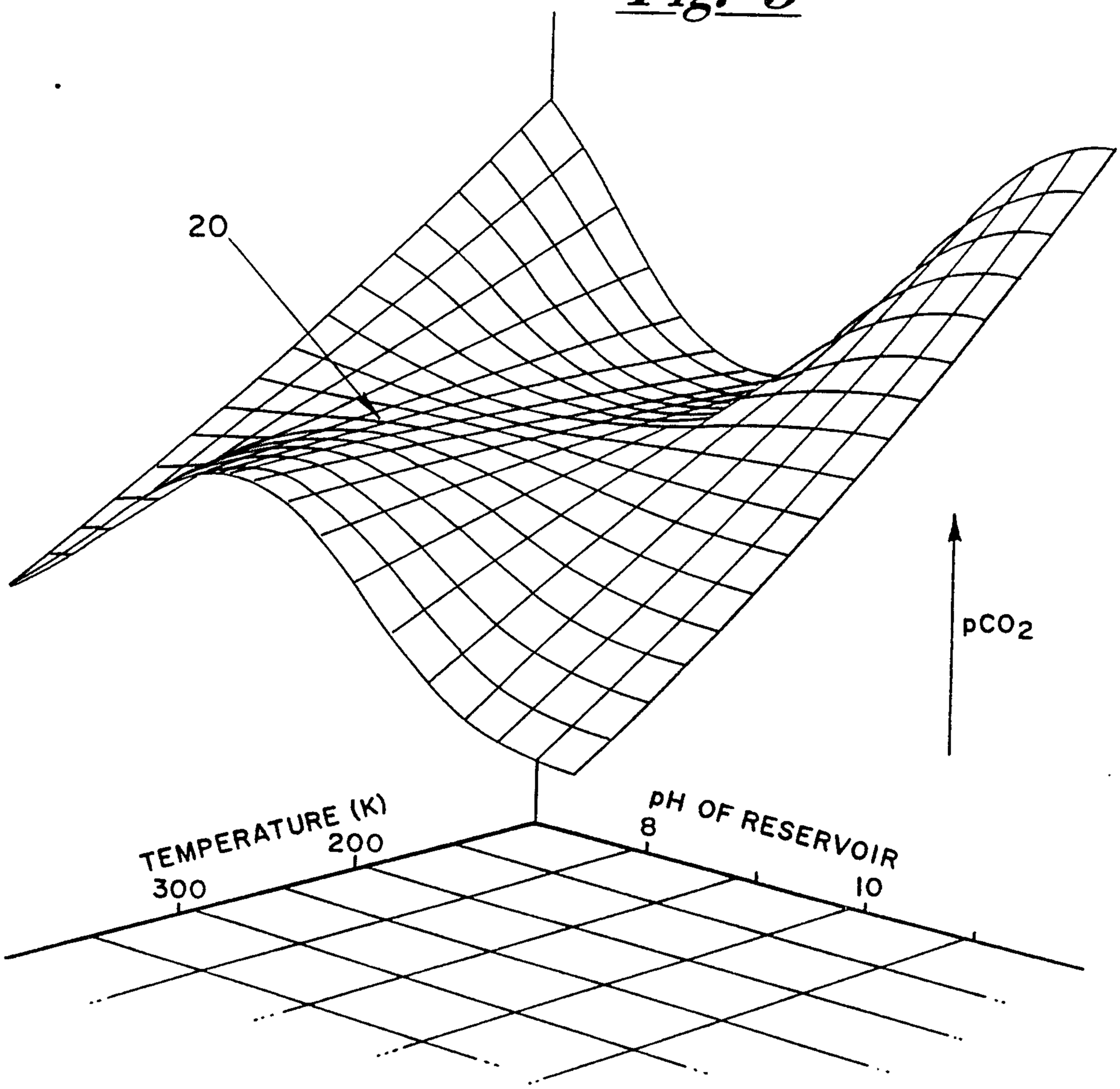

Fig. - 4

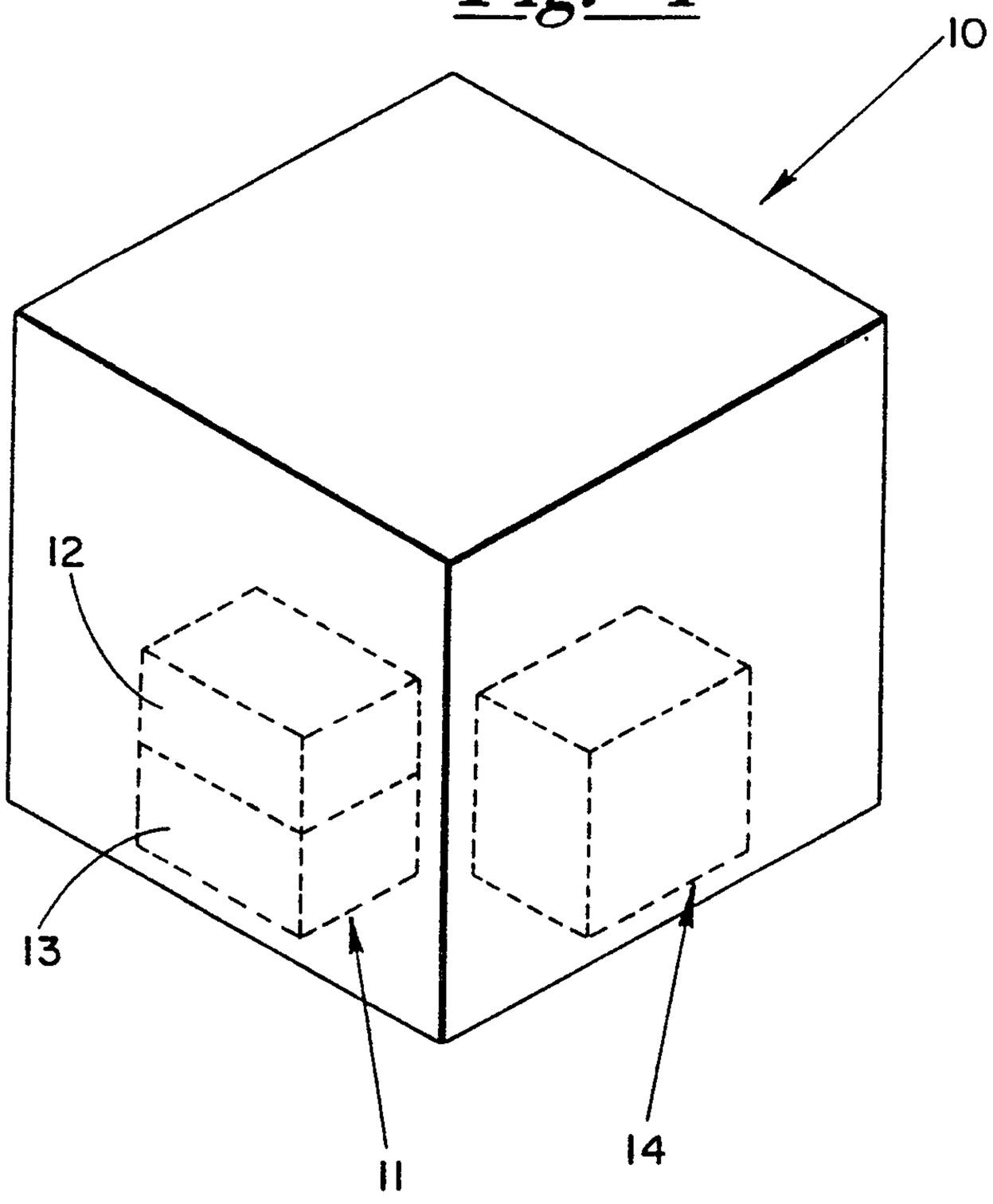

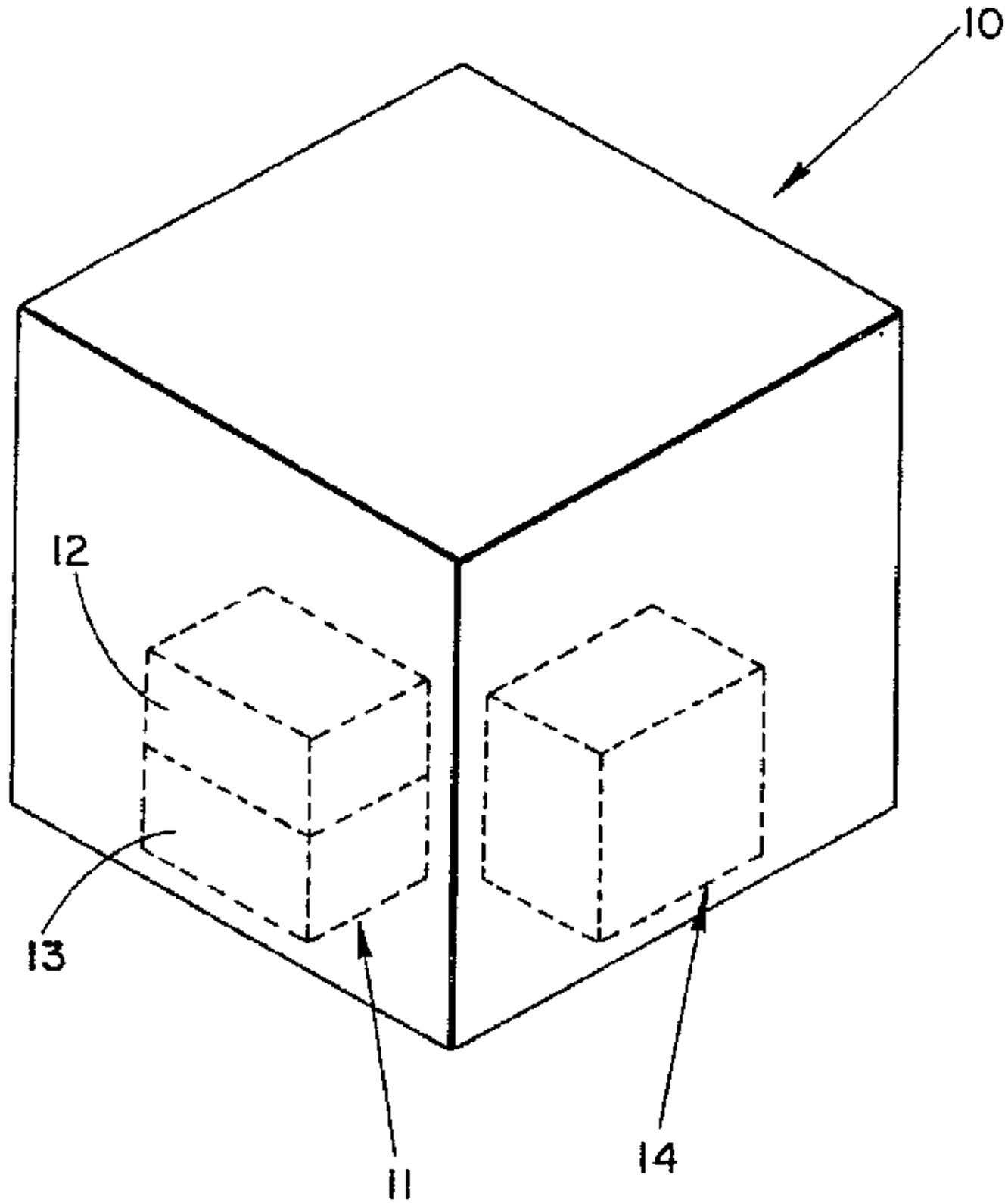
10
12
13
11
14