(12) INTERNATIONAL APPLICATION PUBLISHED UNDER THE PATENT COOPERATION TREATY (PCT)

(19) World Intellectual Property Organization
International Bureau

(43) International Publication Date
23 March 2006 (23.03.2006)

PCT

(10) International Publication Number
WO 2006/031439 A1

(51) International Patent Classification:
G07F 17/32 (2006.01)

(21) International Application Number:
PCT/US2005/030901

(22) International Filing Date: 30 August 2005 (30.08.2005)

(25) Filing Language: English

(26) Publication Language: English

(30) Priority Data:

10/939,772	13 September 2004 (13.09.2004)	US
60/610,262	16 September 2004 (16.09.2004)	US
11/052,391	7 February 2005 (07.02.2005)	US

(71) Applicant *(for all designated States except US)*: **POKERTEK, INC.** [US/US]; 1020 Crews Road, Suite J, Matthew, NC 28106 (US).

(72) Inventors; and

(75) Inventors/Applicants *(for US only)*: **WHITE, Gehrig, Henderson** [US/US]; 6207 Glynmoor Lakes Drive, Charlotte, NC 28277 (US). **CRAWFORD, James, T., III** [US/US]; 5237 Lancelot Drive, Charlotte, NC 28270 (US).

(74) Agent: **YEE, James, R.**; 39400 Woodward Avenue, Suite 101, Bloomfield Hills, MI 48304-5151 (US).

(81) Designated States *(unless otherwise indicated, for every kind of national protection available)*: AE, AG, AL, AM, AT, AU, AZ, BA, BB, BG, BR, BW, BY, BZ, CA, CH, CN, CO, CR, CU, CZ, DE, DK, DM, DZ, EC, EE, EG, ES, FI, GB, GD, GE, GH, GM, HR, HU, ID, IL, IN, IS, JP, KE, KG, KM, KP, KR, KZ, LC, LK, LR, LS, LT, LU, LV, MA, MD, MG, MK, MN, MW, MX, MZ, NA, NG, NI, NO, NZ, OM, PG, PH, PL, PT, RO, RU, SC, SD, SE, SG, SK, SL, SM, SY, TJ, TM, TN, TR, TT, TZ, UA, UG, US, UZ, VC, VN, YU, ZA, ZM, ZW.

(84) Designated States *(unless otherwise indicated, for every kind of regional protection available)*: ARIPO (BW, GH, GM, KE, LS, MW, MZ, NA, SD, SL, SZ, TZ, UG, ZM, ZW), Eurasian (AM, AZ, BY, KG, KZ, MD, RU, TJ, TM), European (AT, BE, BG, CH, CY, CZ, DE, DK, EE, ES, FI, FR, GB, GR, HU, IE, IS, IT, LT, LU, LV, MC, NL, PL, PT, RO, SE, SI, SK, TR), OAPI (BF, BJ, CF, CG, CI, CM, GA, GN, GQ, GW, ML, MR, NE, SN, TD, TG).

Published:

— *with international search report*

— *before the expiration of the time limit for amending the claims and to be republished in the event of receipt of amendments*

For two-letter codes and other abbreviations, refer to the "Guidance Notes on Codes and Abbreviations" appearing at the beginning of each regular issue of the PCT Gazette.

WO 2006/031439 A1

(54) Title: SYSTEM AND METHOD FOR PROVIDING A CARD TOURNAMENT USING ONE OR MORE ELECTRONIC CARD TABLES

(57) Abstract: A system and method provides a card tournament on one or more electronic card tables. The card tables have a table top with a playing surface and a plurality of electronic player interaction areas located around a periphery of the table top. Each electronic player interaction area provides a player interface for interaction with one of a plurality of players. A tournament computer is coupled to the electronic player interaction areas of the electronic card table for administering the card tournament. The card tournament includes a series of card hands of a card game played at the electronic card table using electronic cards and electronic chips.

SYSTEM AND METHOD FOR PROVIDING A CARD TOURNAMENT USING ONE OR MORE ELECTRONIC CARD TABLES

RELATED APPLICATIONS

[0001] The present application is a continuation-in-part of U.S. Patent Application Serial No. 10/939,772, filed September 13, 2004, and claims the benefit of U.S. Provisional Patent Application Serial No. 60/610,262 filed on September 16, 2004, both of which are incorporated herein by reference.

FIELD OF THE INVENTION

[0002] The present invention relates generally to electronic poker tables, and more particularly, to a system and method for providing an electronic poker tournament on one or more electronic poker tables.

BACKGROUND OF THE INVENTION

[0003] Gaming is an increasingly popular form of entertainment. Games, particularly, games of chance and skill in which one or more players play and place wagers on the outcome thereof may be played in a variety of ways, including at a casino or other venue or on the Internet. Of the various forms of games which are available for play, many are played with playing cards. Of these, poker is arguably the most popular.

[0004] Traditionally, poker is played at a table with several players wagering paper, coin money or chips on a series of playing cards dealt from a deck of fifty-two cards. This deck is comprised of four suits at thirteen cards per suit. This form of poker requires a human dealer to coordinate the game, including dealing, wagering, folding, etc. One of the problems with traditional poker is that it suffers from the possibility of human/dealer error. In "social" card games, especially poker, the players take turns acting as the dealer, but in licensed commercial gaming establishments, such as casinos, the dealer is typically a non-playing employee. Thus, another problem associated with traditional poker games in this context is the training and retention of dealers.

[0005] One alternative form of gaming, with particular reference to poker, has flourished on the Internet. Internet gaming has become quite successful in that it provides many choices for the players. In particular, Internet gaming is fast and convenient, with registration, betting and payouts available from almost any computer with Internet access and with payments typically arranged via a credit card.

[0006] Poker or other card games may also be provided by stand-alone machines similar to slot machines.

[0007] One major drawback of Internet and stand-alone type games is the lack of the human element. Many people prefer to play poker against other players, due in part to the drama associated with "live" gaming. Undoubtedly, an elevated level of competition exists when humans compete directly against one another. In gaming establishments, experienced players are trying to hone strategy and read other players' intentions through their movements and style of play to be more competitive.

[0008] The present invention is aimed at one or more of the problems set forth above.

SUMMARY OF THE INVENTION

[0009] In one aspect of the present invention a system provides a card tournament. The system includes an electronic card table and a tournament computer. The electronic card table includes a table top and a plurality of electronic player interaction areas. The table top has a playing surface. The plurality of electronic player interaction areas are located around a periphery of the table top. Each electronic player interaction area provides a player interface for interaction with one of a plurality of players. The tournament computer is coupled to the electronic player interaction areas of the electronic card table for administering a card tournament, the card tournament including a series of card hands of a card game played at the electronic card table using electronic cards and electronic chips.

[0010] In a second aspect of the present invention, a system for providing a card tournament to a plurality of players is provided. The system includes a plurality of electronic card tables and a tournament computer. Each electronic card table has a table top with a playing surface and a plurality of electronic player interaction areas located around a periphery of the table top. Each electronic player interaction area provides a player interface for interaction with one of the plurality of players. The tournament computer is coupled to the electronic player interaction areas of the electronic card tables for administering a card tournament, the card tournament including a series of card hands of a card game played at each electronic card table using electronic cards and electronic chips.

[0011] In a third aspect of the present invention, a method for providing card tournaments using an electronic card table is provided. The electronic card table includes

a table top and a plurality of electronic player interaction areas. The table top has a playing surface. The plurality of electronic player interaction areas are located around a periphery of the table top. Each electronic player interaction area provides a player interface for interaction with one of a plurality of players. The method includes the step of administering a card tournament using electronic cards and electronic chips by the tournament computer. The card tournament includes a series of card hands of a card game played at the electronic card table.

[0012] In a fourth aspect of the present invention a method for providing card tournaments on a plurality of electronic card tables is provided. Each electronic card table has a table top with a playing surface and a plurality of electronic player interaction areas located around a periphery of the table top. Each electronic player interaction area provides a player interface for interaction with one of the plurality of players. A tournament computer is coupled to the electronic player interaction areas of the electronic card tables. The method includes the step of administering a card tournament using electronic cards and electronic chips by the tournament computer, the card tournament including a series of card hands of a card game played at each electronic card table.

[0013] In a fifth aspect of the present invention, a method of administering a card tournament on at least one electronic card table is provided. The electronic card table includes a table top and a plurality of electronic player interaction areas. The table top has a playing surface. The plurality of electronic player interaction areas are located around a periphery of the table top. Each electronic player interaction area provides a player interface for interaction with one of the plurality of players. Each player has an associated player ID number. The card table has an associated tournament computer coupled to the electronic player interaction areas of the electronic card tables. The method includes the steps of registering for the card tournament by each player using the players' player ID number, assigning each player an electronic player interaction area, allowing each player to log-in to the assigned electronic player interaction area through their player ID number, and administering the card tournament by dealing one or more card hands using electronic chips and/or electronic cards.

[0014] In a sixth aspect of the present invention, a method of administering a card tournament on at least one electronic card table is provided. The electronic card table has

a table top and a plurality of electronic player interaction areas. The table top has a playing surface. The plurality of electronic player interaction areas are located around a periphery of the table top. Each electronic player interaction area provides a player interface for interaction with one of the plurality of players. Each player has an associated player ID number. The card table has an associated tournament computer coupled to the electronic player interaction areas of the electronic card tables. The method includes the steps of registering the players for the card tournament, assigning each player an electronic player interaction area, disbursing a predetermined value in electronic chips to each player, and administering the card tournament by dealing one or more card hands using the electronic chips and electronic cards.

[0015] In a seventh aspect of the present invention, a method of administering a card tournament on a plurality of electronic card tables is provided. Each card table includes a table top and a plurality of electronic player interaction areas. The table top has a playing surface. The plurality of electronic player interaction areas are located around a periphery of the table top. Each electronic player interaction area provides a player interface for interaction with one of the plurality of players. Each player has an associated player ID number. The electronic card tables have an associated tournament computer coupled to the electronic player interaction areas of the electronic card tables. The method includes the steps of establishing a break order associated with the electronic card tables, registering the players for the card tournament, assigning each player an electronic player interaction area, administering the card tournament by dealing one or more card hands using the electronic chips and electronic cards, and breaking a next electronic card table in the break order if a triggering condition occurs and responsively assigning any remaining players at the next electronic card table to empty electronic player interaction areas at other electronic card tables.

[0016] In an eighth aspect of the present invention, a method of administering a card tournament on at least one electronic card table is provided. The electronic card table includes a table top and a plurality of electronic player interaction areas. The table top has a playing surface. The plurality of electronic player interaction areas are located around a periphery of the table top. Each electronic player interaction area provides a player interface for interaction with one of the plurality of players. Each player has an associated player ID number. An associated tournament computer is coupled to the

electronic player interaction areas of the electronic card tables. The method includes the steps of registering the players for the card tournament, assigning each player an electronic player interaction area, administering the card tournament by dealing one or more card hands using electronic chips and electronic cards, and providing information to the players regarding player statistics related to the card tournament.

BRIEF DESCRIPTION OF THE DRAWINGS

[0017] Other advantages of the present invention will be readily appreciated as the same becomes better understood by reference to the following detailed description when considered in connection with the accompanying drawings wherein:

[0018] Figure 1 is a diagrammatic illustration of a system for providing an electronic poker game on one or more electronic poker tables, according to an embodiment of the present invention;

[0019] Figure 2 is a simplified diagram of a table top of the electronic poker tables of Figure 1, according to an embodiment of the present invention;

[0020] Figure 3 is a simplified diagram of a table top of the electronic poker tables of Figure 1, according to another embodiment of the present invention;

[0021] Figure 4 is a block diagram of the system of Figure 1, according to an embodiment of the present invention;

[0022] Figure 5 is a second block diagram of the system of Figure 1, including the element of an electronic poker table, according to an embodiment of the present invention;

[0023] Figure 6 is a diagrammatic illustration of an electronic poker table, according to an embodiment of the present invention;

[0024] Figure 7 is a top view of the electronic poker table of Figure 6;

[0025] Figure 8 is a diagrammatic illustration of a module of the electronic poker table of Figure 6, according to an embodiment of the present invention;

[0026] Figure 9 is a representation of a first screen shot displayed on an electronic player interaction area of the system of Figure 1, according to an embodiment of the present invention;

[0027] Figure 10 is a representation of a second screen shot displayed on an electronic player interaction area of the system of Figure 1, according to an embodiment of the present invention;

[0028] Figure 11 is a representation of an electronic player interaction area of the system of Figure 1 embodied in a hand-held device;

[0029] Figure 12 is a representation of a front side and a back side of an electronic playing card;

[0030] Figure 13A is a block diagram of software components of the system of the present invention;

[0031] Figure 13B is a simplified block diagram of a system for providing an electronic poker game, according to an embodiment of the present invention;

[0032] Figure 14A is a block diagram of a system for providing an electronic poker tournament on an electronic poker table, according to an embodiment of the present invention;

[0033] Figure 14B is a block diagram of a system for providing an electronic poker tournament on a plurality of electronic poker tables, according to an embodiment of the present invention;

[0034] Figure 15A is a method for providing an electronic poker tournament on an electronic poker table, according to an embodiment of the present invention;

[0035] Figure 15B is a method for providing an electronic poker tournament on an electronic poker table, according to another embodiment of the present invention;

[0036] Figure 15C is a method for providing an electronic poker tournament on an electronic poker table, according to another embodiment of the present invention;

[0037] Figure 15D is a method for providing an electronic poker tournament on an electronic poker table, according to another embodiment of the present invention; and,

[0038] Figure 15E is a method for providing an electronic poker tournament on an electronic poker table, according to another embodiment of the present invention.

DETAILED DESCRIPTION OF INVENTION

[0039] With reference to the drawings and in operation, the present invention relates generally to a system 10 and method for providing, and being related to an electronic card game, such as electronic poker. With specific reference to Figure 1, the system 10 is designed to be situated in a gaming environment, such as a casino 12. Typically, such gaming environments 12 are a specialized or designated area within the casino 12, such as a poker room or poker area 14, which has been cordoned off by, for example, a railing 16. While the above refers to one possible implementation or location in which the

system 10 may be used, the present invention is not limited to any such location or implementation. Other details of the system may be found in U.S. Patent Application Serial Nos. N/A (File No. 60,667-007), N/A (File No. 60,667-008), N/A (File No. 60,667-009), N/A (File No. 60,667-010), N/A (File No. 60,667-011), N/A (File No. 60,667-012), N/A (File No. 60,667-013), N/A (File No. 60,667-014), N/A (File No. 60,667-015), N/A (File No. 60,667-016), N/A (File No. 60,667-017), N/A (File No. 60,667-018), N/A (File No. 60,667-020), N/A (File No. 60,667-021), N/A (File No. 60,667-022), N/A (File No. 60,667-023), N/A (File No. 60,667-024), N/A (File No. 60,667-025), N/A (File No. 60,667-026), N/A (File No. 60,667-027), N/A (File No. 60,667-028), N/A (File No. 60,667-029), N/A (File No. 60,667-030), N/A (File No. 60,667-031) and N/A (File No. 60,667-032), which are hereby incorporated by reference.

[0040] In the illustrated embodiment, the system 10 utilizes electronic chips and electronic playing cards to provide an automated card game for play by two or more players. In one aspect of the present invention, a human dealer is not required. The system 10 may handle all dealer functions.

[0041] The system 10 may be used to play any variation or version of any card game. However, for the purposes of discussion, the system 10 will be described as adapted for use in implementing the version of poker known as, Texas Hold'em.

[0042] In one aspect of the present invention, the system 10 may handle assigning players to a seat, providing electronic chips, accepting wagers, and assigning a pot to the winning player. The system 10 electronically shuffles a set of electronic playing cards and deals the electronic playing cards to the player and any common cards to an electronic card or poker table 18. The system 10 may also handle wagering, folding, calling by the players and may restrict such, based on whose turn it is.

[0043] In another aspect of the present invention, the card or poker tables 18 in the system 10 are networked and connected to one or more servers (see below). The server may be used to implement and facilitate, player tracking, ticket in ticket out (cashless) wagering, assigning players to a seat at a particular table, tournament play, table set-up (including turning the tables on and off and modifying table parameters), and progressive jackpots.

[0044] As shown in the illustrated embodiment, the system 10 includes a plurality of electronic poker tables 18. In the embodiment shown in Figure 1, the system 10 includes

five electronic poker tables 18, although the present invention is not limited to a specific number of electronic poker tables.

[0045] A simple representative layout of a table top 20 of the poker tables 18, according to first and second embodiments of the present invention are shown in Figures 2 and 3, respectively.

[0046] In the top view of the table top 20 shown in Figure 2, the table top 20 includes a playing surface 22 and a plurality of electronic player interaction areas 24. In the illustrated embodiment, the poker tables 18 are able to seat a maximum of ten players at a time, and thus, includes ten electronic player interaction areas 24A-24J.

[0047] In the top view of the table top 20 shown in Figure 3 (in which like elements are labeled with the same reference numbers), the table top 20 includes a playing surface 22 and a plurality of electronic player interaction areas (EPIAs) 24. In the illustrated embodiment, the poker tables 18 are able to seat a maximum of ten players at a time, and thus, includes ten electronic player interaction areas 24. The table top 10 also includes a central or common display area (CDA) 26.

[0048] In one embodiment, the individual electronic player interaction areas 24 are used to convey game information directly to a player assigned to a specific electronic player interaction area 24A-24J and to implement a player user interface (see below) to effectuate interaction or input from the player. The central or common display area 26 is used to display information to all of the players.

[0049] For example in one embodiment, the system 10 is used to play the version of poker known as Texas Hold'em. In Texas Hold'em, each player is dealt a number of cards, e.g., two cards, face down. These are known as a player's "hole" cards 28. A number of cards, e.g., three or five, are dealt face-up and displayed in the common display area 26. These are known as the common cards 30. A player's hand, thus, comprises the player's hole cards 28 and the common cards 30. At the end of each hand, of the remaining players, whichever player's hand makes the highest poker hand is the winner of that round or hand of poker.

[0050] In one aspect of the present invention, the hole cards 28 are displayed face-down on the respective electronic player interaction area 24 and the common cards are displayed in the central display area 26. The hole cards 28 are displayed at a first predetermined ratio and the common cards 30 are displayed at a second predetermined

ratio. The first and second predetermined ratios may be expressed as a ratio of a standard size playing card or a predetermined default size. In one embodiment, the first and second ratios are the same. In another embodiment, the first and second ratios are different. For example, the first and second ratios may be defined such that the common cards 30 are displayed larger than the hole cards 28.

[0051] With reference to Figures 6, 7, and 8 in one embodiment, the electronic player interaction areas 24 are implemented using separate display devices, such as touchscreen displays 32. Each display 32 may be housed in a removable module 34.

[0052] The module 34 may incorporate a fully-functional computer. The computer includes a processor capable of running an operating system, such as Windows XP or Windows CE, both available from Microsoft Corporation of Redmond, Washington. In one embodiment, the module 34 includes a card reader 36 for reading a player ID card (not shown).

[0053] In the illustrated embodiment, the modules 34 are mounted into the table top 20, such that the touchscreen display 32 is parallel to the table top 20. However, the touchscreen display 32 may be mounted at an angle with respect to the table top 20. Alternatively, the modules 34 may be adjustable to provide an adjustable viewing angle of the touchscreen display 32.

[0054] In one embodiment, the central display area 26 is implemented in a separate display, such as a LCD or plasma monitor or similar device.

[0055] The remainder of the table top may be covered in a material such as felt, or more specifically, green, blue, or red felt. Logos, game information, or other information may be printed on the material.

[0056] In an alternative embodiment, the electronic player interaction areas 24 and the central display area 26 may be implemented in a single display which covers a large portion of the table top. The electronic player interaction areas 24 and the central display area 26 may be set apart from the rest of the table top 20 by virtual borders. The areas of the display around the electronic player interaction areas 24 and the central display area 26 may be used to simulate the table top of a standard poker table, e.g., an image of material, such as green felt, may be displayed. Furthermore, logos, game information, other information, advertisements, announcements, pictures, videos, or other information

may be displayed, rotated, cycled, or displayed for a limited period of time on the table top 20 and/or the electronic player interaction areas 24.

[0057] As discussed below, the system 10 and poker tables 18, although electronic, are designed to convey and retain the overall sense and ambience of a standard poker room with non-electrical poker tables. Each electronic poker table 18 is surrounded by a number of poker chairs 40. The number of poker chairs 40 being equal to the number of electronic player interaction areas 24 on the electronic poker table 18.

[0058] With particular reference to Figures 6 and 7, in the illustrated embodiment the poker tables 18 have an oval shape and may seat a maximum number of players. For example, the poker tables 18 may be sized to seat a maximum of 7, 8, 9, 10, or 11 players, although the present invention is not limited to any particular sized poker table. As stated above the table top is covered, in between the electronic player interaction area 24, and the central or common display area 26 if provided, by material, such as green felt, or simulation thereof. The poker table includes one or more bases 42 to which one or more legs 44 are connected. The legs 44 support the table top. A rail or bumper 46 encircles the outer circumference of the table top 20.

[0059] With specific reference to Figures 4 and 5, as discussed above the system 10 may include one or more electronic poker tables 18. In one aspect of the present invention, the poker tables 18 are networked together using, e.g., an Ethernet network 48. One or more servers 50 may be used to provide functionality for the system 10. For example, the server 50 may be used to implement various functions, including, but not limited to:

- starting and stopping the tables 18 on a game,
- data and player tracking,
- cashless wagering,
- defining and modifying table parameters, including, turning the tables 18 on and off, setting the poker game being played at the table 18, setting wager parameters, etc.,
- defining and managing jackpots, including the a house percentage, i.e., the rake,
- defining and managing progressive jackpots,
- establishing and managing a queue for players and assigning players to seats and/or specific tables from the queue, and

- establishing and managing tournament play, including assigning player seats, collapsing tables, etc.

[0060] With particular reference to Figure 5, in one embodiment each table 18 includes ten electronic player interaction areas 24 which are implemented in the computer based modules 34. Each module 34 is connected to the server 50 through the network 48. As shown, another computer 52, such as a personal computer running on Windows XP, may also be connected to the server 50 through the network 48. The primary function of the PC 52 may be to control and drive the central display area 26.

[0061] In one embodiment, the server 50 runs the poker games on each of the tables 18. The primary function of the modules 34 is to run the electronic player interaction areas 24, to display and run a user interface.

[0062] In another embodiment, the poker game or portions of the poker game may be executed or run by the modules 34 and/or the computer 52.

[0063] In another aspect of the present invention, the system 10 will implement a player-account based cash in/cash out system. The system 10 will create a user account for each player. Once an account is established for the player, the player is issued a Player Card having an associated personal identification number or PIN. Once the player has been issued a Player Card, their account may be funded. The Player Card is used to identify the player at the tables 18. The player may fund their account by bringing cash to a cage, where the cash is accepted and credited to the player's account. Printed receipts are given to the player and maintained by the casino 12. To bring electronic chips to the table 18, the player sits down at a seat, swipes their Player Card and enters their PIN. The system 10 informs the player of their account balance and allows them to convert all or a portion of the account balance to electronic chips to bring to the game.

[0064] With particular reference to Figure 13A, from a software perspective the system 10 may be implemented using six program groups: a game engine 82, a table server 84, a table client 86, a player client 88, a table manager 90, and a cage manager 92. The table server 84 implements the network communication, control and authentication as well as inter-table functions (seat reservations, multi-table tournaments). The game engine 82 administers the electronic poker game and is responsible for all game functions, e.g., electronic playing card deck generation, dealing, betting, determining winners and awarding pots. The table client 86 is the graphical control for the central display area 26.

The player client 90 implements the user interface for the electronic player interaction areas 24 and the logic for capturing player input and communication from the player input to the table client server. The table manager 88 contains the user interface for setting user, network, and game parameters, for starting, pausing, and stopping games, and for monitoring game activity and responding to system or user generated alerts. The cage manager 92 provides the ability to create and fund player accounts and to create the Player Cards.

[0065] With reference to Figures 9 and 10, each electronic player interaction area 24 implements a player interface 54. The player interfaces 54 may be implemented on the table top 20 (see above), or in the module 34. In another embodiment, the player interface 54 may be implemented on a hand-held device 58, such as a personal data assistant (PDA).

[0066] The player interface 54 may be graphical in nature (as shown in Figures 9 and 10), or may take other forms, such as a simple textual format. In one embodiment the electronic player interaction areas 24 provide the player with the option of choosing between several player interfaces 54, such as a graphical representation of an electronic poker table 56 or the text interface.

[0067] Returning to Figures 9 and 10, in one embodiment the player interface 54 includes a graphical representation of a poker table 56. Each player in the poker game may be represented by a user graphic or icon 62, which may list their names as well as their chip totals. The pot of the current hand may be represented in the center of the poker table 56 by stack(s) of chips 64 and/or a number 66 representing the value of the current pot. Each player's contribution to the pot may be represented by stack(s) of chips 68 and/or a number 70 adjacent their user graphic 62.

[0068] The player interface 54 may also include a series of player option buttons 72 and a series of game buttons 74. The player option buttons 72 may include, for example, a sit in button 72A, a leave table button 72B, and an options button 72C. Generally, only one of the sit in button 72A and the leave table button 72B would be active at any time. The options button 72C allows the player to access an option menu or screen (not shown) which allow the player to modify certain parameters of the player interface 54, such as, for example, to choose between different formats of the player interface 54. The series of game buttons 74 allow the player to signal their game play decisions to the system 10

during the play of the game. The game buttons 74 may include a fold button 74A, a call button 74B and a raise button 74C. These typically would only be active when it is a player's turn in the poker game. In one embodiment, the buttons 72 are implemented on the touch screen display devices 32. In an alternative embodiment, the buttons 72 are embodied in electro-mechanical switches or buttons (not shown).

[0069] In one embodiment, the player interface 54 may also include the community cards 30. Other information which may be displayed on the player interface includes, but is not limited to indicator of the player whose turn it is, a total of chips for each player, any cards of the other players which are face-up, and/or messages to the player, such as advertising.

[0070] In another aspect of the present invention, the player interface 54 includes a graphical representation of one or more of electronic playing cards 76 (see Figure 12). Each electronic playing card 76 has a front side 76A and a back side 76B. The back side 76B of each card has an identical pattern or image such that the cards cannot be told apart when viewing the back side 76B. The electronic playing card 76 is typically one of a set or deck of standard playing cards. The deck may be a standard deck of 52 cards, each card having a value. The value being two components: the first component being one of a two through ACE and the second component being one of four suits (hearts, diamonds, clubs, spades). The value of each card is indicated on the front side 76A of each playing card 76.

[0071] The image displayed on the back side 76B of the playing cards may be a logo, a random image (chosen from a set of predetermined images), or may be advertising directed at the player. The image may include a video. In one embodiment, the image displayed on the back side 76B of the playing cards may be cycled through a set of predetermined images. The image may be selectable by a user, who may be the player or an employee of the casino.

[0072] In one embodiment, the electronic playing card or cards 76 are a player's hole card(s) in an electronic poker game. However, the electronic playing cards 76 may be used in any sort of electronic card game in which it is desirable to controllably display/hide the player's cards. Thus, while the present invention may be described below in the context of an electronic poker game (and more specifically, with respect to a

player's hole cards in a Hold'em style poker game), the present invention is not limited to such a card game.

[0073] In a playing card game with physical cards, in which the player's cards are dealt "face-down" and not revealed to any other player, the player may look at their cards, while attempting to keep the cards secret from the other players in several ways. For example, the player may lift the cards close to their bodies, spread them out, and shield them with their hands, so only the player can see the front side of their cards. Or the player may leave the cards face down on the table and lift one side or corner revealing at least a portion of the front side, while shielding the cards with their hands.

[0074] A controller, which is either, the module 34, the personal computer 52, the hand-held device 58, the server 50 or a combination thereof, controls the player interface 54, i.e., controls the information components of the player interface 54 displayed on the electronic player interaction areas 24, detects touches on the touch screen display devices 32 (when utilized) and interprets the touches as trigger or touch events (see below). As discussed below, the controller 24, 52, 58, 50 may control the display or obscuring (hiding) of the player's hole electronic playing card(s) such that the player may controllably display and view the cards, while maintaining them secret from the other players. As if the player was playing with physical playing cards, the player, thus, has the opportunity to shield their cards with their hand or hands prior to them being revealed.

[0075] A system and method for controllably displaying/obscuring the player's hole electronic playing card(s) is disclosed in U.S. Patent Application Serial No. 10/939,772, filed September 13, 2004, which is hereby incorporated by reference.

[0076] In one aspect of the present invention, each electronic player interaction area 24 is assigned to a player. Once the player is assigned to a particular seat at a table 18, the associated EPIA 24 may set as inactive or locked and may indicate the assigned player's name. Once the EPIA 24 is locked, the assigned player must login to the EPIA 24 (see below).

[0077] Once the player logs-in, the EPIA 24 becomes active and the player interface 54 is displayed. Also, since the EPIA 24 is active, the player may enter or sit-in on the game being played at the table 12 or adjust/modify any available options by actuating the options button 72C.

[0078] In one embodiment as discussed above, the EPIAs 24 may be implemented using a separate or modular computer 34. In one embodiment, the modular computer 34 includes a display 32 which may be a touch-screen display 32. The touch-screen display 32 displays information (text and/or graphics) regarding the play of the game and implements buttons or selectable areas on the EPIA 24 for user input.

[0079] A player may log-in to the system 10 or table 18 through the EPIA 24. In one embodiment, the player may log-in to the system 10 using a player tracking card. The player inserts or swipes their player tracking card through the card reader 36. The EPIA 24 may also require entry of a PIN into an attached keypad or keypad implemented on the touch-screen display device 32. Alternatively or in addition, the player may log-in using a biometric parameter, such as a fingerprint, sensed by a sensor and a RFID card or chip.

[0080] In one aspect of the present invention, the EPIA 24 includes a sound generation device which is used to generate sounds audible to the player assigned to the EPIA 24. The sound generation device may be implemented as an earpiece or headphones or one or more speakers. Generated sounds may be categorized as system sound or player sounds. System sounds include sounds which are intended or suitable to be heard by everyone, including other players and non-players. Player sounds include sounds which are intended to be heard, but not necessarily only, by the player. Example, system sounds may include sounds imitating the shuffling of cards, the dealing of cards, chips thrown into the pot, or sounds related to the winning of the jackpot. Player sounds may include a reminder or indication of a player's turn or if the game is timed, an indication of the time remaining or that time is running out. Player exclusive sounds are sounds that can or should only be heard by the player and may indicate an audible signal indicating the player's hole cards or the highest hand of the player or a winning percentage associated with the player's hand.

[0081] In another aspect of the present invention, the EPIAs 24 may be implemented via a touchscreen display device 32. The devices 32 may be integrated with a computer in a module. Alternatively, the touchscreen devices 32 may be separate devices controlled by separate computers or the computer 52 at the table 18 or the server 50.

[0082] In many gaming environments 12, such as a poker room at a casino, a portion or percentage of each pot goes to the house for running the poker game. This portion of the

pot is known as the rake. In one embodiment, the amount of the rake corresponding to the current pot is displayed on each EPIA 24. The rake may be shown as an amount in dollars and may include a graphical representation of electronic chips.

[0083] In one aspect of the present invention, the system 10 utilizes both electronic chips and electronic playing cards. In one embodiment, the EPIA 24 may include a graphical representation of the chips and/or a dollar amount indicative of the amount of chips each player at the table has remaining. Additionally, the EPIA 24 may include a graphical representation of the chips and/or a dollar amount indicative of the amount of the current pot. The pot may be shown in the middle of a graphical representation of the poker table.

[0084] In one embodiment, each EPIA 24 may also include a graphical representation of the community cards in the middle of the graphical representation of the poker table. Graphical representations of the other player's cards may also be shown (face-down during the current hand and face-up at the end of the hand).

[0085] As discussed above, the system 10 may require that the player logs-in to the EPIAs 24 which is open or to which they have been assigned. The log-in may be accomplished in a variety of ways (see above). Once a player's identity has been established, however, the player can access a player account, purchase chips using an account balance. Additionally, information regarding the player's play at the table may be tracked and recorded to the player's account.

[0086] The EPIAs 24 may be provided with an ear-phone or head-phone to provide the sounds (see above) or other signals to the player.

[0087] In one aspect of the present invention, the sounds provided by the EPIA 24 (see above), are provided using a simulated voice.

[0088] In one aspect of the present invention, the system may utilize a cashless system, such as Ticket-In Ticket-Out or "TITO" (see below)

[0089] In one embodiment, the system 10 requires that each player has a player account. The player account may have an associated balance which contains a dollar amount based on an amount of money deposited by the player and/or any winnings that they have collected, either through poker or some other game. Once a player has been identified by the EPIA 24, the player may download a dollar amount and purchase chips to play.

[0090] Alternatively, a ticket (with for example a barcode), magnetic card, RFID card, or some other media (jointly referred to as a TICKET) may be inserted in the EPIA 24, the table 18, or at a kiosk. The TICKET may have an associated value which is either printed and/or encoded thereon or which is associated with the TICKET in the system 10.

[0091] Additionally, once the player decides to leave the table 18, any remaining chips they have, may be instantly converted back into dollars and stored in their player account and/or a new Ticket may be generated.

[0092] In another aspect of the present invention, each EPIA 24 may provide an indication of whose turn it is to act. If it is the player's turn who is assigned to an EPIA 24, then the EPIA 24 may provide an appropriate signal, such as an icon, either next to their name or anywhere on the EPIA 24, a sound such as a beep or musical tones, and/or a voice message. If it is another player's turn, the EPIA 24 may indicate whose turn it is by an icon and/or flashing text, e.g., adjacent the player's name.

[0093] As discussed above, the EPIA 24 includes a set of player option buttons 72 which allow the player to take an appropriate action, such as bet, fold, or call, during their turn. In one embodiment, the EPIA 24 only activates those buttons 72 which are appropriate, given the rules of the game being played, during the current turn. For example, if the maximum number of raises for a particular game have already been made, then the wager or raise button would be inactive. Additionally, all of the buttons 72 will be inactive when it is not the player's turn.

[0094] As discussed above, each seat or EPIA 24 is assigned to a particular player. The player may be assigned to a seat off an electronic waiting list using a queuing system or may be assigned by an employee of the casino using the system 10. However, under certain situations, the player may desire to change seats or move to another table. For example, if another player or players have left the table leaving fewer players at the table and the player does not like to play at a table with that few of players, the player may request through the EPIA 24 another seat assignment.

[0095] The present invention includes methods for displaying and/or obscuring a player's hole cards (see above). Additionally or separately, the EPIA 24 may be adapted to provide an indication of the winning percentage based on the player's current hand and the community cards. The winning percentage may be shown textually, e.g., 55%, and/or graphically, e.g., a pie-chart or bar chart. The winning percentage may be

triggered and shown using the same trigger event associated with the hole cards. Alternatively, a separate trigger event, such as a touch-event on another location on the EPIA 24 may be used to show the winning percentage.

[0096] The present invention includes methods for displaying and/or obscuring a player's hole cards (see above). Additionally or separately, the EPIA 24 may be adapted to provide an indication of the player's current highest hand based on the player's current hand and the community cards. The highest hand may be shown textually, e.g., two-pairs, and/or graphically, pictures of the five cards which make the highest hand. The highest hand may be triggered and shown using the same trigger event associated with the hole cards. Alternatively, a separate trigger event, such as a touch-event on another location on the EPIA 24 may be used to show the highest hand.

[0097] As discussed above, a poker table 18 may include one or more EPIAs 24. For example, each poker table may have 11 seats and accommodate up to 11 players. Each EPIA 24 may have one or more of the features described in IV.

[0098] In one embodiment as discussed above, the EPIAs may be implemented using a separate or modular computer 34. In one embodiment, the modular computer 34 includes a display 32 which may be a touch-screen display 32. The touch-screen display 32 displays information (text and/or graphics) regarding the play of the game and implements buttons or selectable areas on the EPIA 24 for user input.

[0099] In one aspect of the present invention, the table 18 includes a table sound generation device which is used to generate sounds audible to the players. The table sound generation device may be implemented on one or more speakers mounted to or integral with the table 18. Alternatively, the table sound generation device may include one or more speakers adjacent to or integral with each EPIA 24. Generally, the sound generation device plays system sounds or player sounds which are suitable for every player to hear.

[00100] For example, system sounds may include sounds imitating the shuffling of cards, the dealing of cards, chips thrown into the pot, sounds related to the winning of the jackpot. Player sounds may include a reminder or indication of a player's turn or if the game is timed, an indication of the time remaining or that time is running out. Generally, player exclusive sounds will not be played through the player sound generation device.

[00101] Typically displays, such as LCD or Plasma monitors are rectangular in form. As shown in Figures 6 and 7, the overlay may be integral with the table top 20 and may include a cut out. The overlay covers the outer edge of the display. Only the portion of the display inside the cut-out is visible. In the illustrated embodiment, the cut out has a shape, such as an oval shape, which is similar to the shape of the table.

[00102] As discussed above, the rake is defined as a portion or percentage of each pot that goes to the house for running the poker game. This portion of the pot is known as the rake. In one embodiment, the amount of the rake corresponding to the current pot is displayed on the central display area 26. The rake may be shown as an amount in dollars and may include a graphical representation of electronic chips.

[00103] In another aspect of the present invention, the central display area 26 may provide an indication of whose turn it is to act. In one embodiment, the central display area 26 may provide an appropriate signal, such an icon, e.g., an arrow or other symbol, a sound such as a beep or musical tones, and/or a voice message. This indication of a player's turn may be in addition to the indication on the EPIA 24.

[00104] During a poker hand, even at a standard poker table with a human dealer, one of the players is designated as the "dealer", for the purposes of the order in which the playing cards are dealt and in which wagers are made. In one aspect of the present invention, the central display area 26 may provide an indication of which player is designated the "dealer" for the current hand. In one embodiment, the central display area 26 may provide an appropriate signal, such as an icon, e.g., an arrow or other symbol. This indication of a player's turn may be in addition to the indication on the EPIA 24.

[00105] As discussed above, the hole cards 28 are displayed face-down on the respective electronic player interaction area 24 and the common cards are displayed in the central display area 26. In one aspect, the common cards 30 are displayed at a larger size than the hole cards 28.

[00106] In one aspect of the present invention, the table 18 provides a poker game, such as Texas Hold'em for the players. In one embodiment, the provided poker game is a timed game, i.e., the player's have a predetermined time period in which to complete each turn. For example, the player's have a set period of one minute to complete each turn. Alternatively, the period of time may vary based, e.g., the first turn may have a period of completion of one minute, while the second turn may have a shorter or longer

period of completion. Alternatively, each player may have a bank of time. The time used to complete each turn may be deducted from their time bank.

[00107] In another aspect of the present invention, the central display 38 may be used to display advertising messages. The advertising messages may be from the casino or third parties and may comprise graphics, pictures, animations, video and/or audio. The advertising may be presented at specific location on the central display 38 and may be varied, based on time, i.e., cycled through a set of advertising messages.

[00108] With particular reference to Figure 13B, in one embodiment the game engine 82 is implemented or run on a game computer 94. If the electronic poker table 18 is a stand-alone table 18, then the electronic poker table 18 may include its own game computer 94. Alternatively, the game computer 94 may be the server 50, which may be networked to multiple electronic poker tables 18.

[00109] In one embodiment, the game engine 82 includes a random number generator or RNG (not shown). At the beginning of each hand of the electronic poker game, the RNG is used to shuffle a deck of 52 electronic cards and to determine the deck order. One of the players is designated as the dealer.

[00110] If the poker table 18 is playing Texas Hold'em, the player on the dealer's left (typically designated by the dealer button) is known as the "Little Blind" and the player on the left of the Little Blind is known as the "Big Blind". At the beginning of the hand, the player known as the Big Blind must post into the pot a predetermined amount, e.g., $1, $5, or $10. This amount is also known as the Big Blind. Prior to that, the player known as the Little Blind must also post into the pot a predetermined amount, typically ½ of the Big Blind. This amount is also known as the Little Blind. Typically, the game engine 82 will automatically deduct the Big Blind and the Little Blind from the respective player's stacks and add them to the pot.

[00111] After the blinds have been posted, the game engine 82 will deal two cards, i.e., the players' hole cards, face down to each player. These cards are displayed face down on each player's electronic player interaction area 24. As described above, each player may controllably view their hole cards.

[00112] After the hole cards are dealt, the game engine 82 administers a betting round. The first betting round starts with the player on the left of the Big Blind. Generally, each player is given an appropriate set of selections in the form of the game buttons 74. In one

embodiment, the game buttons 74 are displayed only during the player's turn. Furthermore, only the game buttons 74 which, according to the rules of the poker game being played, are appropriate are displayed.

[00113] After the first betting round, three community cards, i.e., the "flop" are dealt face up by the game engine 82 and displayed. In one embodiment, the community cards are displayed in each electronic player interaction area 24, as shown. If a central display area 26 is used, then the community cards may alternatively or in addition be displayed thereon.

[00114] This is followed by a second betting round. After the second betting round, a fourth community card, i.e. the "turn" is dealt by the game engine 82, followed by a third betting round.

[00115] After the third betting round, the fifth and final community card, i.e., the "river" is dealt face up. This is followed by the fourth and final betting round. If more than one player remains after the final betting round, the player with the highest hand is determined as the winner of the hand.

[00116] If after any of the first through third betting rounds, only one player remains, then the remaining player is automatically determined as the winner. Since one or more of the community cards have not been dealt, the rabbit button 72D on each electronic player interaction area 24 becomes active or is displayed, as described above.

[00117] In one aspect of the present invention, the poker tables 18 in the system 10 are networked and connected to one or more servers 50. The server 50 may be used to implement and facilitate, player tracking, ticket in ticket out (cashless) wagering, assigning player's to a seat at a particular table, tournament play, table set-up (including turning the tables on and off and modifying table parameters), and progressive jackpots. Each table 18 may have one or more EPIAs 24. The poker tables 18 and the EPIAs may have one or more of the features described below.

[00118] In addition, other devices may be connected to the server 50 for providing additional features and/or functions. For example, a queuing system may be provided (see below). This system may be implemented using a separate computer which implements this function. The separate computer may also implement other features or functions of the system. It should be noted, however, that in some systems, these additional features or function could be provided, at least in part, by the server(s) 50.

[00119] In one aspect of the present invention, the server 50 runs the games. In other words, the server 50 electronically "shuffles" the playing cards, deals the cards, controls the players' turns, receives the player's inputs and acts accordingly, tracks, manages, and awards the pot, tracks the rake, etc. Game data is stored in a database. Each input, wager, play, etc. is stored in the database.

[00120] In one aspect of the present invention, a queueing system assigning player's to seats at a poker table 18 is provided. The queueing system may also implement an electronic waiting list if there are no seats available. In one embodiment, one or more devices, such as a personal, notebook, or tablet computer, handheld computer, or PDA, is accessible by one or more employees of the casino. The device(s) allow the employee(s) to enter a customer's name or player ID or to swipe the player's ID Card. If there is a seat at a table 18 available, the player may be assigned to the seat.

[00121] If there is more than one seat available, in one embodiment the employee, may select one of the seats (with or without input from the player). Alternatively, the device may select the seat using a predetermined set of rules.

[00122] If there are no seats available, the player is placed in a queue, until a seat opens up. In one embodiment, players are taken off of the queue and assigned a seat on a first come, first served basis. However, the system 10 may allow the casino to implement special rules for players to bypass the queue or list. For example, the casino may present vouchers to players under certain conditions, such as a win in a tournament, to be placed at the head of a queue.

[00123] In one aspect of the present invention, the server 50 provides an interface which allows a user, such as an authorized or designated employee of the casino, to set-up a new table 18 or to modify the parameters of an existing table 18. The interface may be implemented on a server 50 or on another device networked to the server 50.

[00124] The interface may provide one or more of the following features: ability to turn a table on/off, and ability to change game parameters, such as the permitted wagers, the game being played, the rake, etc.

[00125] In one aspect of the present invention, as stated above the system 10 tracks each transaction, wager, card dealt in a database. The system 10 also tracks the players which are playing at each table 18. This information is stored in the database, summarized, and may be presented in any numerous forms of reporting formats. Any information

regarding the player's, the games, and how each hand is played may be tracked. This available data may also be analyzed for purposes of determining the frequency of poker hands (per hour) for a table or all games in which a particular player or players played or detecting, e.g., collusion between players.

[00126] As discussed above, in one embodiment every player must belong to a player club and have an assigned player ID card to log-in to an EPIA 24 to play poker at a table 18. Each player has an account in the player tracking club. The player's account in the tracking club tracks the amount of cash or money that the player has available for play at poker. The player's account also tracks the player's play at a poker table 18, including amounts wagered and amounts won.

[00127] The system 10 allows jackpots, i.e., progressive jackpots, to be generated by and won across multiple hands and/or multiple tables. A progressive jackpot may increase based on the amounts wagered and/or won at the included tables. The progressive jackpot may continue to increase until won under a set of predetermined conditions. Alternatively, it may be active for only a predetermined time period. The conditions for winning the jackpot may be that it is won by one or more players before the end of the time period.

[00128] The system 10 allows a progressive jackpot to be funded in multiple ways. The way in which a progressive jackpot is funded may be funded through a computer program application on the server 50 or other device. For example, the progressive jackpot may be funded by taking a set percentage from every pot, every other pot, or every n^{th} pot.

[00129] The amount of the progressive jackpot may be displayed on the central display 38 and/or a remote display.

[00130] The progressive jackpot may be initiated randomly, under certain defineable conditions, and/or for a specific event, i.e., a marketing event. The progressive jackpot may be a single hand (across multiple hands), a predetermined number of hands at one table or across multiple hands, for a predetermined time period, etc.

[00131] In another aspect of the present invention, after a jackpot is won by a player or the player logs out or any winner exceeds a predetermined amount, or at any other appropriate time, one or more government reporting forms may be presented to the player on their EPIA 24. The form may accept the player's electronic signature (if permissible)

or may notify the player of the requirements and direct them to a location where they can fill out the form. The device may be a personal, notebook, or tablet computer, handheld computer, PDA, or other suitable device.

[00132] In one aspect of the present invention, one or more employees of the casino may be assigned to manage a plurality of tables. One of the employees may manage the queueing system (where provided). A device, networked to the server, may be provided which provides various functions to the employees. The device provides a dashboard application which allows the employee to manage various aspect of the tables 18

[00133] In one aspect of the present invention, the employee may view various data related to the current state of a table, including, but not limited to, the players, the pot, wager information, the common cards, etc.

[00134] The employee, for example, in response to an in-person query or a query made through an EPIA 24, may view tracked data to look for evidence of collusion between two or more players. For example, the employee may determine if two or more persons at a particular table have a habit of playing at the same time and to determine if there is any pattern discernable in the play which would provide evidence that they are impermissibly working together.

[00135] In one aspect of the present invention, each EPIA 24 may provide a player with buttons which summon or direct specific employees of the casino. For example the player may request a host/hostess to order a drink. Additionally, the player may request that an employee review something that occurred or is occurring at the table 18, e.g., possible collusion. This may be done anonymously.

[00136] As described above, the device which allows the players to manage the tables 18, may also allow the employee to automatically or manually assign players to particular tables and/or seats and/or EPIA 24.

[00137] In one embodiment, the server 50 controls the advertising on the central display 38. Advertising may also be provided on the EPIA's 24 and/or a remote display associated with the poker tables 18. The server 50 may control the content, frequency, and/or the cycling of the advertising.

[00138] In one aspect of the present invention, a player may refrain from playing in one or more hands or get up from a table and not play in one or more hands. Typically, however, if the player decides to play a subsequent hand, then the player owes the current

pot a predetermined amount, i.e., the "missed blind", per hand missed. In one embodiment, if the player decides to sit-out one or more hands, then the system 10 tracks the number of hands missed and automatically deducts an amount equal to the number of hands missed multiplied by the blind once the player decides to play another hand.

[00139] As discussed above, the system 10 records every transaction, card dealt or played, wager, etc. in a database. This allows the system 10 to recover from any error and put the game back into the same state.

[00140] The system 10 facilitates tournament play. In a tournament, a predetermined number of tables 18 having a predetermined number of players are involved. A buy-in, e.g., $100 is required. Typically, after a player loses all of their money, they are eliminated from the tournament.

[00141] Under predetermined rules, players may register for a tournament and be assigned to seats at a table. During play, under predetermined rules, tables may be broken down and the players distributed to other tables. The system 10 facilitates the tournament by providing one or more of the following features:

a) Registration

b) Tracking tournament information

c) Display of tournament information on central display and/or remote display

d) Tournament set-up, e.g., buy-in

e) Re buy-in

f) Tournament jackpot, cash or entry voucher for entry another tournament (specific tournament or expiration date)

g) Process for breaking tables

(1) message that table is breaking

(2) convey new seat assignment

(3) determination of breaking order

(4) display of breaking order

h) Display information on status of other tables and players at other tables

i) System to monitor and adjust hands per hour of an individual table during a tournament: During a poker

tournament it is important that each table play roughly the same number of hands per hour as all other tables. This can be accomplished by pausing a game and/or slowing a game down with out pausing.

j) Multi-site tournaments.

k) System for automatically paying players tournament winnings based on tournament pay tables and their final position in the tournament.

[00142] In one aspect of the present invention, remote or virtual games may be provided by the system 10. The remote or virtual games may be provided on wireless devices and may be played at predetermined locations.

[00143] Virtual games may also be provided through the EPIAs 24. For example, the virtual or remote games may be played by the poker players when it is not their turn. The virtual or remote games may be another poker hand, played against other players, at the table or at other tables, or played against virtual players. Alternatively, the remote or virtual games may be other types of games, including, but not limited to blackjack, keno, slot machines, etc.

[00144] In addition to running other casino games on the EPIAs 24 or other terminals, the system 10 can be run on other gaming devices throughout the casino. For example, a virtual poker game can be run on an existing electronic bingo terminal or an electronic race book terminal.

[00145] With reference to Figures 14A, 14B, 15A, 15B, 15C, 15D, and 15E, in another aspect of the present invention, the system 10 may be used to provide a poker tournament.

[00146] Generally, poker tournaments may be provided at a single poker table or using a plurality of poker tables (see below). In one configuration, players who want to enter a tournament register for the tournament. There is a buy-in or registration fee from which the host, such as a casino, takes a percentage. The remainder is used to purchase chips. Each player is assigned to a seat at a poker table and the players use their purchased chips to play poker. Once a player wagers and loses all of their chips they are eliminated from the tournament. If it is a single table tournament, then the last player remaining is

the winner of the tournament. Generally, players cannot purchase additional chips during the tournament, although, this may be allowed in early rounds of the tournament.

[00147] If it is a multiple table tournament, tables are broken down according to a predetermined set of rules and order, and the remaining players at one of the tables are redistributed at one or more of the other tables. This continues until there is only one table remaining. Thereafter, the last player remaining at the last table is the tournament winner.

[00148] With specific reference to Figure 14A, in one embodiment of the present invention, the system 10 for providing poker tournaments includes an electronic poker table 102 and a tournament computer 104. The tournament computer 104 runs the poker tournament, as well as the individual hands of the electronic poker game. Thus, the tournament computer 104 includes the functionality of the server 50 and/or the game computer 94. Furthermore, the tournament computer 104 may be located at, or near the electronic poker table 102 or at a remote location.

[00149] The electronic poker table 102 includes a table top 20 and a plurality of electronic player interactions areas 24 (see above). The table top 20 has a playing surface 22. The plurality of electronic player interaction areas 24 are located around a periphery of the table top 20. Each electronic player interaction area 24 provides a player interface 54 for interaction with one of a plurality of players. The tournament computer 104 is coupled to the electronic player interaction areas 24 of the electronic poker table 102 for administering a poker tournament. The poker tournament includes a series of poker hands of a poker game played at the electronic poker table 102 using electronic cards and electronic chips.

[00150] In one embodiment, after the players have registered and paid the registration fee, the tournament computer 104 provides a predetermined value in the electronic chips to each player at the beginning of the poker tournament.

[00151] As discussed above, each poker hand includes one or more betting rounds during which the players may make wagers. The wagers are deducted from the player's electronic chips and added to a pot. The tournament computer 104 determines a winner of each poker hand and awards the pot to the winner.

[00152] Each player must pay an entry or registration fee to enter the tournament. In one embodiment a player who has been eliminated may be allowed to re-buy into the

tournament under a set of predetermined rules. For example, the predetermined rules may allow an eliminated player to buy more electronic chips during the first or early levels of the tournament or during the first X number of hands.

[00153] Any player who loses all of their electronic chips is eliminated by the tournament computer 104. The tournament computer 104 determines a winner of the tournament as the last player having any electronic chips, and awards a tournament award to the winner of the tournament. The tournament award may include a predetermined award, such as cash, a predetermined prize pool, a predetermined percentage of the players' entry fees, merchandise, entry into another poker tournament, and/or an additional prize(s). Other players, such as the second and third place finishers may also be awarded an award. The awards may be predetermined and defined by a pay schedule.

[00154] As discussed above, the tournament computer 104 administers the electronic poker game using electronic cards and electronic chips. The electronic cards are dealt by the tournament computer 104 and displayed on the electronic player interaction areas 24 and/or the central display area 26. Each hand of the first and second poker games includes at least one betting round, the tournament computer 104 for allowing the players to place wagers using electronic chips through the electronic player interaction areas 24 during the at least one betting round.

[00155] In one embodiment of the present invention, the tournament computer 104 may be used to register players for the tournament and to assign each player to one of the electronic player interaction areas 24. This may be done randomly, by the tournament computer 104 or may be done in accordance with a set of predetermined rules. For example, the predetermined rules may be include a set order for electronic player interaction areas 24 to be assigned. The predetermined rules may also take into account information regarding the player, e.g., forbidding players who know each other to sit at adjacent electronic player interaction areas 24 or even at the same table 102.

[00156] In another aspect of the present invention, the poker tournament has a variable level associated therewith. For example, the tournament computer 102 may set an initial level for the poker tournament and increase the level associated with the poker tournament as a function of a number of hands played and/or a time elapsed during the poker tournament. The value, in terms of electronic chips, may be varied as a function of

the level of the poker tournament at any given time. For example, in one embodiment, each player may be required to ante, or place an initial bid, into the pot at the beginning of each hand. Similarly, one or more players may be required to place a blind wager before the beginning of the hand (see above). The values of the ante or the blinds may be set as a function of the current level of the poker tournament. Generally, the level of the poker tournament will increase as the tournament progresses, and thus, the value of the ante or the blinds will increase.

[00157] With specific reference to Figure14B, the system 10 includes a plurality of electronic poker tables (EPTs) 102A, 102B, 102C. Although only three are shown, any number of poker tables may be included. The tournament computer 104 is coupled to the electronic player interaction areas 24 of the electronic poker tables 102A, 102B, 102C for administering the poker tournament. The poker tournament includes a series of poker hands of a poker game played at each electronic poker table 102A, 102B, 102C using electronic cards and electronic chips. Operation of the poker tournament by the tournament computer 104 operates in a similar manner as described above.

[00158] In one embodiment, the tournament computer 104 automatically breaks down one of the electronic poker tables 102A, 102B, 102C and assigns any remaining players at the electronic poker table to be broken down to electronic player interaction areas 24 at other electronic poker tables 102A, 102B, 102C.

[00159] In one embodiment, the tournament computer 104 automatically, randomly, determines a breakdown order of the electronic poker tables 102A, 102B, 102C. The tournament computer 104 may automatically break down in the breakdown order when a predetermined triggering event occurs. For example, the triggering event may be defined by a number of empty electronic player interaction areas 24 at the other electronic poker tables being equal to a number of players remaining at a next electronic poker table in the breakdown order.

[00160] When a player is assigned to an electronic player interaction area 24, they may be required to log-on by entering a personal identification number (which may be provided at registration) and/or by inserting a player ID card into a card reader (not shown).

[00161] Once the tournament computer 104 determines that one of the tables 102A, 102B, 102C needs to be broken down, the tournament computer 104 provides a message

to each player at the table 102A, 102B, 102C to be broken down, that their table will be broken down at the end of the current hand, next hand, or some subsequent hand. The players may also be given their new seat assignment. At the end of the designated hand, the players are automatically logged out of their current electronic player interaction area 24 and their electronic chip stack is transferred to their new seat assignment and will be available when they log in to their new electronic player interaction area 24.

[00162] With reference to Figure 15A, a method 110 for providing poker tournaments on a electronic poker table 102 is shown. In a first step 112, the electronic poker table 102 is provided. In a second step 114, the tournament computer 104 is provided. As discussed above, the electronic poker table 102 has a table top 20 with a playing surface 22 and a plurality of electronic player interaction areas 24 located around a periphery of the table top 20. Each electronic player interaction area 24 provides a player interface for interaction with one of a plurality of players. The tournament computer 104 is coupled to the electronic player interaction areas 24 of the electronic poker table 102. In a third step 116, the poker tournament is administered by the tournament computer 104 using electronic cards and electronic chips. The poker tournament includes a series of poker hands of a poker game played at the electronic poker table 102.

[00163] In one embodiment, the method 110 includes the step of providing a predetermined value in the electronic chips to each player at the beginning of the poker tournament. Each poker hand includes on or more betting rounds during which the players may make wagers. In one embodiment, the wagers are deducted from the player's electronic chips, i.e. their chip stack and the wagers are added to the pot. A winner of each poker hand is determined and awarded the pot.

[00164] With particular reference to Figure 15B, in another aspect of the present invention, a method 120 of administering a poker tournament on at least one electronic poker table is shown. Each player has an associated player ID number. The player ID number may be assigned at the time of registration or may be an ID number already assigned to the player. The player ID number may be specifically used for tournaments or may be used for other purposes as well, including but not limited to a player tracking system or accessing a player account.

[00165] In a first step 122, the players register for the poker tournament using their players' player ID number. Registration may be performed at 1) a kiosk 106 coupled or

networked to the tournament computer, 2) via the internet, or other suitable means. In a second step 124, the players are assigned to one of the electronic player interaction areas 24. In a third step 126, the players log-in to the assigned electronic player interaction area 24 through their player ID number. Log-in may also require entry of a personal identification number. The players' ID number may be entered manually through a screen of the player interface 54 or transmitted through some other means, such as a RFID tag or a player ID card read by a card reader (not shown).

[00166] In a fourth step 128 , the poker tournament is administered using electronic or electronic chips and cards by dealing one or more hands of an electronic poker game.

[00167] In one embodiment, each player must create an account on the tournament computer 104. The player's account includes an associated player ID number. The player account may include the player's name or may be anonymous. In one embodiment, the player's account must be funded. Typically, this would be accomplished at a cashier's station or cage.

[00168] With reference to Figure 15C, in another aspect of the present invention a method 130 administers a poker tournament on at least one electronic poker table 102. The electronic poker table 102 has a table top 20 with a playing surface 22 and a plurality of electronic player interaction areas 24 located around a periphery of the table top 20. Each electronic player interaction area 24 provides a player interface 54 for interaction with one of the plurality of players. Each player has an associated player ID number.

[00169] In a first step 132, the players register for the tournament. In a second step 134, each player is assigned to an electronic player interaction area 24. In a third step 136, the tournament computer 106 disburses a predetermined value in electronic chips to each player. In one embodiment, the predetermined value is a function of the registration fee and the amount retained by the host of the poker tournament. In a fourth step 138, the poker tournament is administered by dealing one or more poker hands using the electronic chips and electronic cards.

[00170] With particular reference to Figure 15D, a method 140 administers a poker tournament on a plurality of electronic poker tables 102A, 102B, 102C. Each electronic poker table 102 has a table top 20 with a playing surface 22 and a plurality of electronic player interaction areas 24 located around a periphery of the table top 20. Each electronic player interaction area 24 provides a player interface 54 for interaction with

one of the plurality of players. Each player has an associated player ID number. The tournament computer 104 is coupled to the electronic player interaction areas 24 of the electronic poker tables 102A, 102B, 102C.

[00171] In a first step 142, a break order associated with the electronic poker tables 102A, 102B, 102C is established. In a second step 144, the players register for the poker tournament. In a third step 146, each player is assigned to one of the an electronic player interaction areas 24. In a fourth step 148, a predetermined value of electronic chips are assigned to each player. In a fifth step 150, the poker tournament is administered by dealing one or more hands of the electronic poker game using electronic cards and electronic chips. In a sixth step 152, a next electronic poker table (EPT) 102A, 102B, 102C, is broken down if a triggering condition occurs and any remaining players are re-assigned to electronic player interactions areas 24 located at other tables 102A, 102B, 102C.

[00172] As discuss above, for each hand of the electronic poker game, a dealer position corresponding to one of the player interactions areas 24 is established. When the players are re-assigned to other tables 102A, 102B, 102C, their position with respect to the dealer at the new table is based, to the extent possible, on their position with respect to the dealer position at the old table.

[00173] In another embodiment, the players must log-in to the newly assigned electronic player interaction areas 24. The players may be automatically assessed any missed required wagers if the player has not logged into to the newly assigned electronic player interaction area 24 in a predetermined period of time.

[00174] With particular reference to Figure 15E, a method 160 administers a poker tournament on at least one electronic poker table 102. The electronic poker table 102 has a table top 20 with a playing surface 22 and a plurality of electronic player interaction areas 24 located around a periphery of the table top 20. Each electronic player interaction area 24 provides a player interface 54 for interaction with one of the plurality of players. Each player has an associated player ID number. The tournament computer 104 is coupled to the electronic player interaction areas 24 of the electronic poker table 102. In a first step 162, the players register for the poker tournament. In a second step 164, each player is assigned to an electronic player interaction area 24.

[00175] In a third step 166, the poker tournament is administered by dealing one or more poker hands using electronic chips and electronic cards. In a fourth step 168, information is provided to the players regarding player statistics related to the poker tournament. For example, the player statistics may be displayed on the electronic player interaction areas 24, and/or a central display area 26, and/or a remote display 108. The player statistics may include, but are not limited to a tournament leader, an average chip stack, a leader chipstack, and a differential representing the difference between an average chip stack or a leader chipstack and the player's chipstack.

[00176] Obviously, many modifications and variations of the present invention are possible in light of the above teachings. The invention may be practiced otherwise than as specifically described within the scope of the appended claims.

CLAIMS

1. A system for providing card tournaments, comprising:

an electronic card table having a table top with a playing surface and a plurality of electronic player interaction areas located around a periphery of the table top, each electronic player interaction area providing a player interface for interaction with one of a plurality of players; and

a tournament computer coupled to the electronic player interaction areas of the electronic card table for administering a card tournament, the card tournament including a series of card hands of a card game played at the electronic card table using electronic cards and electronic chips.

2. A system, as set forth in claim 1, wherein the tournament computer provides a predetermined value in the electronic chips to each player at the beginning of the card tournament.

3. A system, as set forth in claim 2, wherein each card hand includes one or more betting rounds during which the players may make wagers, the wagers being deducted from the player's electronic chips and added to a pot, the tournament computer for determining a winner of each card hand and awarding the pot to the winner.

4. A system, as set forth in claim 3, the tournament computer eliminating any player who loses all of their electronic chips.

5. A system, as set forth in claim 4, the tournament computer determining a winner of the tournament as the last player having any electronic chips.

6. A system, as set forth in claim 5, the tournament computer awarding a tournament award to the winner of the tournament.

7. A system, as set forth in claim 6, wherein the tournament award includes entry into another card tournament and/or cash.

8. A system, as set forth in claim 1, wherein the tournament computer administers the card hands by dealing the electronic cards and displaying the electronic cards on the electronic player interface areas.

9. A system, as set forth in claim 8, wherein each hand of the card games includes at least one betting round, the tournament computer for allowing the players to place wagers using electronic chips through the electronic player interaction areas during the at least one betting round.

10. A system, as set forth in claim 1, the electronic card table including a central display area located in a center of the table top.

11. A system, as set forth in claim 10, wherein the tournament computer displays the electronic cards and/or chips on the electronic player interaction areas and/or the central display area.

12. A card table, as set forth in claim 10, the central display area being implemented in a central display device, the card table including a central display computer connected to and for driving the central display device, the central display computer being connected to the tournament computer.

13. A card table, as set forth in claim 10, wherein the electronic player interaction areas are implemented using separate display devices, the display devices being housed in a computer based module, the central display area being implemented in a central display device, the card table including a central display computer connected to and for driving the central display device, the tournament computer being either located at the card table or located remotely, the central display computer and the computer based modules being networked to the tournament computer.

14. A system, as set forth in claim 1, the tournament computer for registering players for the tournament and assigning each player to one of the electronic player interaction areas.

15. A system, as set forth in claim 14, wherein the tournament computer assigns each player to a random electronic player interaction area.

16. A system, as set forth in claim 14, wherein the tournament computer assigns each player to one of the electronic player interaction areas as a function of a set of pre-determined rules.

17. A system, as set forth in claim 1, the card tournament having a variable level associated therewith, the tournament computer setting an initial level for the card tournament and increasing the level associated with the card tournament as a function of a number of hands played and/or a time elapsed during the card tournament.

18. A system, as set forth in claim 17, wherein each hand of the card tournament has an associated ante, the ante having a defined value, each player having to add the value of the ante in electronic chips to the pot at the beginning of each hand, the tournament computer determining the value of the ante as a function of the current level of the tournament.

19. A system, as set forth in claim 18, wherein the value of the ante increases with the level of the tournament.

20. A system, as set forth in claim 17, wherein each hand of the card tournament has at least one blind, the blind having a defined value, one of the payers having to add the value of the ante in electronic chips to the pot during the current hand, the tournament computer determining the value of the blind as a function of the current level of the tournament.

21. A system, as set forth in claim 20, wherein the value of the blind increases with the level of the tournament.

22. A system, as set forth in claim 20, wherein each hand of the card tournament has a little blind and a big blind.

23. A system for providing a card tournament to a plurality of players, comprising:

a plurality of electronic card tables, each electronic card table having a table top with a playing surface and a plurality of electronic player interaction areas located around a periphery of the table top, each electronic player interaction area providing a player interface for interaction with one of the plurality of players; and

a tournament computer coupled to the electronic player interaction areas of the electronic card tables for administering a card tournament, the card tournament including a series of card hands of a card game played at each electronic card table

using electronic cards and electronic chips.

24. A system, as set forth in claim 23, wherein the tournament computer provides a predetermined value in the electronic chips to each player at the beginning of the card tournament.

25. A system, as set forth in claim 24, wherein each card hand includes one or more betting rounds during which the players may make wagers, the wagers being deducted from the player's electronic chips and added to a pot, the tournament computer for determining a winner of each card hand and awarding the pot to the winner.

26. A system, as set forth in claim 25, the tournament computer eliminating any player who loses all of their electronic chips.

27. A system, as set forth in claim 26, the tournament computer determining a winner of the tournament as the last player having any electronic chips.

28. A system, as set forth in claim 27, the tournament computer awarding a tournament award to the winner of the tournament.

29. A system, as set forth in claim 28, wherein the tournament award includes entry into another card tournament and/or cash.

30. A system, as set forth in claim 23, wherein the tournament computer administers the card hands by dealing the electronic cards and displaying the electronic cards on the electronic player interface areas of the respective electronic card table.

31. A system, as set forth in claim 30, wherein each card hand includes at least one betting round, the tournament computer for allowing the players to place wagers using electronic chips through the electronic player interaction areas during the at least one betting round.

32. A system, as set forth in claim 23, the electronic card tables including a central display area located in a center of the respective table top.

33. A system, as set forth in claim 32, wherein the tournament computer displays the electronic cards and/or chips on the electronic player interaction areas and/or the central display area.

34. A system, as set forth in claim 32, the central display areas being implemented in central display devices, each of the card tables including a central display computer connected to and for driving the central display device, each central display computer being connected to the tournament computer.

35. A system, as set forth in claim 32, wherein the electronic player interaction areas are implemented using separate display devices, the display devices being housed in a computer based module, the central display area being implemented in a central display device, each card table including a central display computer connected to and for driving the central display device, the central display computer and the computer based modules being networked to the tournament computer.

36. A system, as set forth in claim 23, the tournament computer for registering players for the tournament and assigning each player to one of the electronic player interaction areas at one of the electronic card tables.

37. A system, as set forth in claim 36, wherein the tournament computer assigns each player to a random electronic player interaction area.

38. A system, as set forth in claim 37, wherein the tournament computer assigns each player to one of the electronic player interaction areas as a function of a set of pre-determined rules.

39. A system, as set forth in claim 23, the card tournament having a variable level associated therewith, the tournament computer setting an initial level for the card tournament and increasing the level associated with the card tournament as a function of a number of hands played and/or a time elapsed during the card tournament.

40. A system, as set forth in claim 39, wherein each hand of the card tournament has an associated ante, the ante having a defined value, each player having to add the value of the ante in electronic chips to the pot at the beginning of each hand, the

tournament computer determining the value of the ante as a function of the current level of the tournament.

41. A system, as set forth in claim 40, wherein the value of the ante increases with the level of the tournament.

42. A system, as set forth in claim 39, wherein each hand of the card tournament has at least one blind, the blind having a defined value, one of the payers having to add the value of the ante in electronic chips to the pot during the current hand, the tournament computer determining the value of the blind as a function of the current level of the tournament.

43. A system, as set forth in claim 42, wherein the value of the blind increases with the level of the tournament.

44. A system, as set forth in claim 42, wherein each hand of the card tournament has a little blind and a big blind.

45. A system, as set forth in claim 23, the tournament computer for automatically breaking down one of the electronic card tables and assigning any remaining players at the one of the electronic card tables to electronic player interaction areas at other electronic card tables.

46. A system, as set forth in claim 45, the tournament computer for automatically, randomly, determining a breakdown order of the electronic card tables.

47. A system, as set forth in claim 46, wherein the electronic card tables are broken down automatically in the breakdown order when a predetermined triggering event occurs.

48. A system, as set forth in claim 46, wherein the triggering event is defined by a number of empty electronic player interface areas at the other electronic card tables being equal to a number of players remaining at a next electronic card table in the breakdown order.

49. A method for providing card tournaments, comprising:

providing an electronic card table having a table top with a playing surface and a plurality of electronic player interaction areas located around a periphery of the table top, each electronic player interaction area providing a player interface for interaction with one of a plurality of players;

providing a tournament computer coupled to the electronic player interaction areas of the electronic card table; and,

administering a card tournament, using electronic cards and electronic chips by the tournament computer, the card tournament including a series of card hands of a card game played at the electronic card table.

50. A method, as set forth in claim 49, including the step of providing, by the tournament computer, a predetermined value in the electronic chips to each player at the beginning of the card tournament.

51. A method, as set forth in claim 50, wherein each card hand includes on or more betting rounds during which the players may make wagers, the method including the steps of:

deducting the wagers from the player's electronic chips;

adding the wagers to the pot;

determining a winner of each card hand; and,

awarding the pot to the winner.

52. A method, as set forth in claim 51, including the step of eliminating, by the tournament computer, any player who loses all of their electronic chips.

53. A method, as set forth in claim 52, including the step of determining a winner of the tournament as the last player having any electronic chips.

54. A method, as set forth in claim 53, including the step of awarding a tournament award to the winner of the tournament.

55. A method, as set forth in claim 54, wherein the tournament award includes entry into another card tournament and/or cash.

56. A method, as set forth in claim 49, wherein the step of administering the card hands includes the steps of dealing the electronic cards and displaying the electronic cards on the electronic player interface areas of the electronic card table.

57. A method, as set forth in claim 56, wherein each hand of the first and second card games includes at least one betting round, the method including the step of allowing the players to place wagers using electronic chips through the electronic player interaction areas during the at least one betting round.

58. A method, as set forth in claim 49, the electronic card table including a central display area located in a center of the respective table top.

59. A method, as set forth in claim 58, wherein the tournament computer displays the electronic cards and/or electronic chips on the electronic player interaction areas and/or the central display area.

60. A method, as set forth in claim 58, the central display area being implemented in a central display device, the card table including a central display computer connected to and for driving the central display device, the central display computer being connected to the tournament computer.

61. A method, as set forth in claim 58, wherein the electronic player interaction areas are implemented using separate display devices, the display devices being housed in a computer based module, the central display area being implemented in a central display device, the card table including a central display computer connected to and for driving the central display device, the tournament computer being either located at the card table or located remotely, the central display computer and the computer based modules being networked to the tournament computer.

62. A method, as set forth in claim 49, including the step of registering, by the tournament computer, players for the tournament and assigning each player to one of the electronic player interaction areas.

63. A method, as set forth in claim 62, wherein the players are randomly assigned to an electronic player interaction area.

64. A method, as set forth in claim 63, wherein the players are assigned to an electronic player interaction area as a function of a set of pre-determined rules.

65. A method, as set forth in claim 49, the card tournament having a variable level associated therewith, the method including the steps of setting an initial level for the card tournament and increasing the level associated with the card tournament as a function of a number of hands played and/or a time elapsed during the card tournament.

66. A method, as set forth in claim 65, wherein each hand of the card tournament has an associated ante, the ante having a defined value, each player having to add the value of the ante in electronic chips to the pot at the beginning of each hand, the tournament computer determining the value of the ante as a function of the current level of the tournament.

67. A method, as set forth in claim 66, wherein the value of the ante increases with the level of the tournament.

68. A method, as set forth in claim 65, wherein each hand of the card tournament has at least one blind, the blind having a defined value, wherein one of the payers having to add the value of the ante in electronic chips to the pot during the current hand, the method including the step of determining the value of the blind as a function of the current level of the tournament.

69. A method, as set forth in claim 48, wherein the value of the blind increases with the level of the tournament.

70. A method, as set forth in claim 68, wherein each hand of the card tournament has a little blind and a big blind.

71. A method for providing card tournaments, comprising:

providing a plurality of electronic card tables, each electronic card table having a table top with a playing surface and a plurality of electronic player interaction areas located around a periphery of the table top, each electronic player interaction area providing a player interface for interaction with one of the plurality of players;

providing a tournament computer coupled to the electronic player interaction areas of the electronic card tables; and,

administering a card tournament using electronic cards and electronic chips by the tournament computer, the card tournament including a series of card hands of a card game played at each electronic card table.

72. A method, as set forth in claim 71, including the step of providing a predetermined value in the electronic chips to each player at the beginning of the card tournament.

73. A method, as set forth in claim 72, wherein each card hand includes on or more betting rounds during which the players may make wagers, the wagers being deducted from the player's electronic chips and added to a pot, the method including the steps of determining a winner of each card hand and awarding the pot to the winner.

74. A method, as set forth in claim 73, including the step of eliminating any player who loses all of their electronic chips.

75. A method, as set forth in claim 74, including the step of determining a winner of the tournament as the last player having any electronic chips.

76. A method, as set forth in claim 75, including the step of awarding a tournament award to the winner of the tournament.

77. A method, as set forth in claim 76, wherein the tournament award includes entry into another card tournament and/or cash.

78. A method, as set forth in claim 71, including the steps of administering the card hands by dealing the electronic cards and displaying the electronic cards on the electronic player interface areas of the respective electronic card table.

79. A method, as set forth in claim 78, wherein each hand of the first and second card games includes at least one betting round, the method including the step of allowing the players to place wagers using electronic chips through the electronic player interaction areas during the at least one betting round.

80. A method, as set forth in claim 71, each electronic card tables including a central display area located in a center of the respective table top.

81. A method, as set forth in claim 80, wherein the electronic cards and/or chips are displayed on the electronic player interaction areas and/or the central display area.

82. A method, as set forth in claim 71, including the steps of registering players for the tournament and assigning each player to one of the electronic player interaction areas at one of the electronic card tables.

83. A method, as set forth in claim 82, wherein each player is assigned to a random electronic player interaction area.

84. A method, as set forth in claim 82, wherein each player is assigned to one of the electronic player interaction areas as a function of a set of pre-determined rules.

85. A method, as set forth in claim 71, the card tournament having a variable level associated therewith, the method including the step of setting an initial level for the card tournament and increasing the level associated with the card tournament as a function of a number of hands played and/or a time elapsed during the card tournament.

86. A method, as set forth in claim 85, wherein each hand of the card tournament has an associated ante, the ante having a defined value, each player having to add the value of the ante in electronic chips to the pot at the beginning of each hand, the method including the step of determining the value of the ante as a function of the current level of the tournament.

87. A method, as set forth in claim 86, wherein the value of the ante increases with the level of the tournament.

88. A system, as set forth in claim 85, wherein each hand of the card tournament has at least one blind, the blind having a defined value, wherein one of the payers having to add the value of the ante in electronic chips to the pot during the current

hand, the method including the step of determining the value of the blind as a function of the current level of the tournament.

89. A method, as set forth in claim 88, wherein the value of the blind increases with the level of the tournament.

90. A method, as set forth in claim 88, wherein each hand of the card tournament has a little blind and a big blind.

91. A method, as set forth in claim 71, including the steps of automatically breaking down one of the electronic card tables and assigning any remaining players at the one of the electronic card tables to electronic player interaction areas at other electronic card tables.

92. A method, as set forth in claim 91, including the step of automatically, randomly, determining a breakdown order of the electronic card tables.

93. A method, as set forth in claim 92, wherein the electronic card tables are broken down automatically in the breakdown order when a predetermined triggering event occurs.

94. A method, as set forth in claim 93, wherein the triggering event is defined by a number of empty electronic player interface areas at the other electronic card tables being equal to a number of players remaining at a next electronic card table in the breakdown order.

95. A method of administering a card tournament on at least one electronic card table, the electronic card table having a table top with a playing surface and a plurality of electronic player interaction areas located around a periphery of the table top, each electronic player interaction area providing a player interface for interaction with one of the plurality of players, each player having an associated player ID number, the card table having an associated tournament computer coupled to the electronic player interaction areas of the electronic card tables, the method including the step of:

registering for the card tournament by each player using the players' player ID

number;

assigning each player an electronic player interaction area;

allowing each player to log-in to the assigned electronic player interaction area through their player ID number; and,

administering the card tournament by dealing one or more card hands using electronic chips and/or electronic cards.

96. A method, set forth in claim 95, including the step of establishing an account for each player and assigning each player a player ID number.

97. A method, as set forth in claim 95, including the step of funding, by the player, the account.

98. A method, as set forth in claim 95, wherein the player logs into the electronic player interaction area using a player ID card and/or a person identification number.

99. A method of administering a card tournament on at least one electronic card table, the electronic card table having a table top with a playing surface and a plurality of electronic player interaction areas located around a periphery of the table top, each electronic player interaction area providing a player interface for interaction with one of the plurality of players, each player having an associated player ID number, the card table having an associated tournament computer coupled to the electronic player interaction areas of the electronic card tables, the method including the step of:

registering the players for the card tournament;

assigning each player an electronic player interaction area;

disbursing a predetermined value in electronic chips to each player; and,

administering the card tournament by dealing one or more card hands using the electronic chips and electronic cards.

100. A method of administering a card tournament on a plurality of electronic card tables, each electronic card table having a table top with a playing surface and a plurality of electronic player interaction areas located around a periphery of the table top, each electronic player interaction area providing a player interface for interaction with one of the plurality of players, each player having an

associated player ID number, the electronic card tables having an associated tournament computer coupled to the electronic player interaction areas of the electronic card tables, the method including the step of:

establishing a break order associated with the electronic card tables;

registering the players for the card tournament;

assigning each player an electronic player interaction area;

administering the card tournament by dealing one or more card hands using the electronic chips and electronic cards; and,

breaking a next electronic card table in the break order if a triggering condition occurs and responsively assigning any remaining players at the next electronic card table to empty electronic player interaction areas at other electronic card tables.

101. A method, as set forth in claim 100, including the step of establishing a dealer position, for each card hand, associated with one of the players at each electronic card table, and wherein the step of assigning the remaining players to empty electronic player interaction areas at other electronic card tables takes into account a player's position with respect to the dealer position at during the last card hand.

102. A method, as set forth in claim 100, wherein the remaining players are randomly assigned to empty electronic player interaction areas.

103. A method, as set forth in claim 100, wherein the step of assigning the remaining players to empty electronic player interaction areas at other electronic card tables, includes the steps of:

allowing the player to log-in to the newly assigned electronic player interaction areas; and,

automatically assessing blind values to the player if the player has not logged into to the newly assigned electronic player interaction area in a predetermined period of time.

104. A method, as set forth in claim 100, wherein the step of assigning the remaining players to empty electronic player interaction areas at other electronic card tables, includes the steps of:

allowing the player to log-in to the newly assigned electronic player interaction areas; and,

responsively transferring the player's electronic chips to the newly assigned electronic player interaction area.

105. A method of administering a card tournament on at least one electronic card table, the electronic card table having a table top with a playing surface and a plurality of electronic player interaction areas located around a periphery of the table top, each electronic player interaction area providing a player interface for interaction with one of the plurality of players, each player having an associated player ID number, the card table having an associated tournament computer coupled to the electronic player interaction areas of the electronic card tables, the method including the step of:

registering the players for the card tournament;

assigning each player an electronic player interaction area;

administering the card tournament by dealing one or more card hands using electronic chips and electronic cards; and,

providing information to the players regarding player statistics related to the card tournament.

106. A method, as set forth in claim 105, wherein the step of providing player statistics to the players includes the step of displaying the player statistics on the electronic player interaction areas, and/or a central display, and/or a remote display.

107. A method, as set forth in claim 105, the player statistics including at least one of a tournament leader, an average chip stack, a leader chipstack, and a differential representing the difference between an average chip stack or a leader chipstack and the player's chipstack.

108. A system for providing poker tournaments, comprising:

an electronic poker table having a table top with a playing surface and a plurality of electronic player interaction areas located around a periphery of the table top, each electronic player interaction area providing a player interface for interaction with one

of a plurality of players; and

a tournament computer coupled to the electronic player interaction areas of the electronic poker table for administering a poker tournament, the poker tournament including a series of poker hands of a poker game played at the electronic poker table using electronic cards and electronic chips.

109. A system for providing a poker tournament to a plurality of players, comprising:

a plurality of electronic poker tables, each electronic poker table having a table top with a playing surface and a plurality of electronic player interaction areas located around a periphery of the table top, each electronic player interaction area providing a player interface for interaction with one of the plurality of players; and

a tournament computer coupled to the electronic player interaction areas of the electronic poker tables for administering a poker tournament, the poker tournament including a series of poker hands of a poker game played at each electronic poker table using electronic cards and electronic chips.

110. A method for providing poker tournaments, comprising:

providing an electronic poker table having a table top with a playing surface and a plurality of electronic player interaction areas located around a periphery of the table top, each electronic player interaction area providing a player interface for interaction with one of a plurality of players;

providing a tournament computer coupled to the electronic player interaction areas of the electronic poker table; and,

administering a poker tournament, using electronic cards and electronic chips by the tournament computer, the poker tournament including a series of poker hands of a poker game played at the electronic poker table.

111. A method for providing poker tournaments, comprising:

providing a plurality of electronic poker tables, each electronic poker table having a table top with a playing surface and a plurality of electronic player interaction areas located around a periphery of the table top, each electronic player interaction area providing a player interface for interaction with one of the plurality of players;

providing a tournament computer coupled to the electronic player interaction

areas of the electronic poker tables; and,

administering a poker tournament using electronic cards and electronic chips by the tournament computer, the poker tournament including a series of poker hands of a poker game played at each electronic poker table.

112. A method of administering a poker tournament on at least one electronic poker table, the electronic poker table having a table top with a playing surface and a plurality of electronic player interaction areas located around a periphery of the table top, each electronic player interaction area providing a player interface for interaction with one of the plurality of players, each player having an associated player ID number, the poker table having an associated tournament computer coupled to the electronic player interaction areas of the electronic poker tables, the method including the step of:

registering for the poker tournament by each player using the players' player ID number;

assigning each player an electronic player interaction area;

allowing each player to log-in to the assigned electronic player interaction area through their player ID number; and,

administering the poker tournament by dealing one or more poker hands using electronic chips and/or electronic cards.

113. A method of administering a poker tournament on at least one electronic poker table, the electronic poker table having a table top with a playing surface and a plurality of electronic player interaction areas located around a periphery of the table top, each electronic player interaction area providing a player interface for interaction with one of the plurality of players, each player having an associated player ID number, the poker table having an associated tournament computer coupled to the electronic player interaction areas of the electronic poker tables, the method including the step of:

registering the players for the poker tournament;

assigning each player an electronic player interaction area;

disbursing a predetermined value in electronic chips to each player; and,

administering the poker tournament by dealing one or more poker hands using the

electronic chips and electronic cards.

114. A method of administering a poker tournament on a plurality of electronic poker tables, each electronic poker table having a table top with a playing surface and a plurality of electronic player interaction areas located around a periphery of the table top, each electronic player interaction area providing a player interface for interaction with one of the plurality of players, each player having an associated player ID number, the electronic poker tables having an associated tournament computer coupled to the electronic player interaction areas of the electronic poker tables, the method including the step of:

establishing a break order associated with the electronic poker tables;

registering the players for the poker tournament;

assigning each player an electronic player interaction area;

administering the poker tournament by dealing one or more poker hands using the electronic chips and electronic cards; and,

breaking a next electronic poker table in the break order if a triggering condition occurs and responsively assigning any remaining players at the next electronic poker table to empty electronic player interaction areas at other electronic poker tables.

115. A method of administering a poker tournament on at least one electronic poker table, the electronic poker table having a table top with a playing surface and a plurality of electronic player interaction areas located around a periphery of the table top, each electronic player interaction area providing a player interface for interaction with one of the plurality of players, each player having an associated player ID number, the poker table having an associated tournament computer coupled to the electronic player interaction areas of the electronic poker tables, the method including the step of:

registering the players for the poker tournament;

assigning each player an electronic player interaction area;

administering the poker tournament by dealing one or more poker hands using electronic chips and electronic cards; and,

providing information to the players regarding player statistics related to the poker tournament.

116. A system, as set forth in claim 1, wherein each player must pay an entry fee to enter the tournament, the tournament computer allowing a player who has been eliminated to re-buy into the tournament under a set of predetermined rules.

117. A method, as set forth in claim 49, wherein each player must pay an entry fee to enter the tournament, the method including the step of allowing a player who has been eliminated to re-buy into the tournament under a set of predetermined rules.

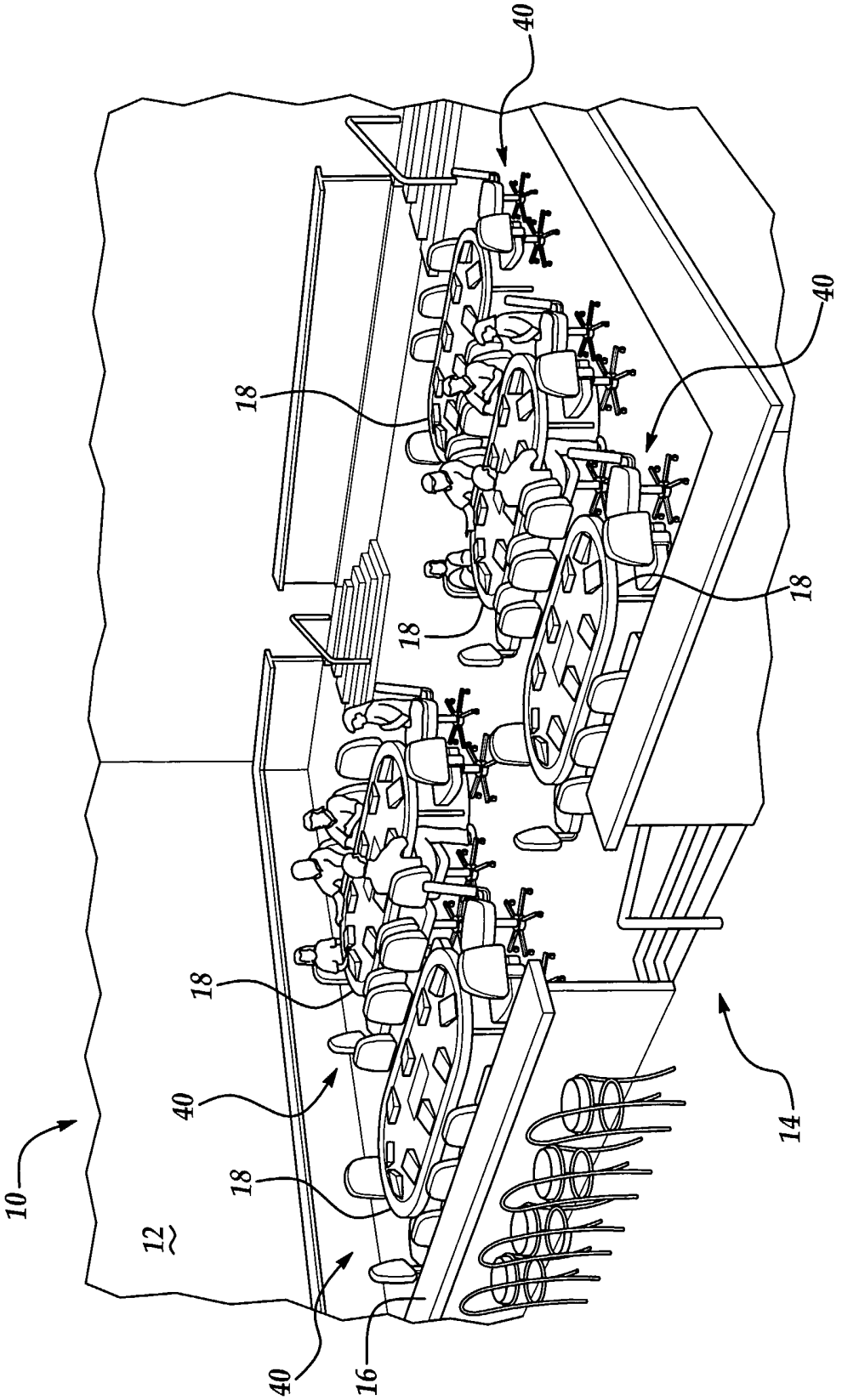

Figure 1

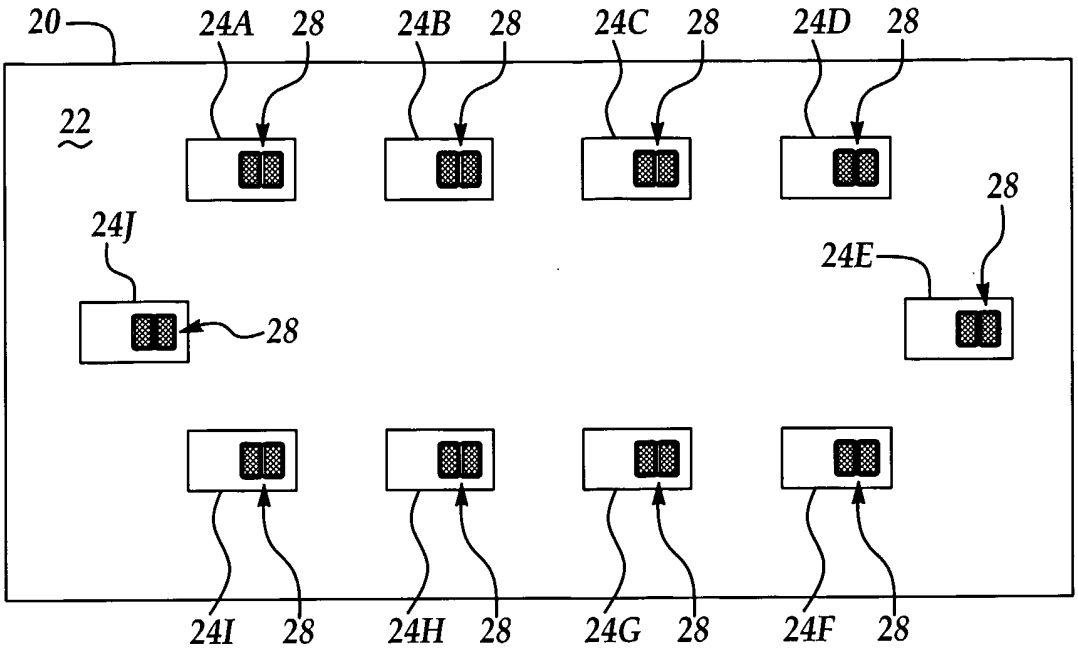

Figure 2

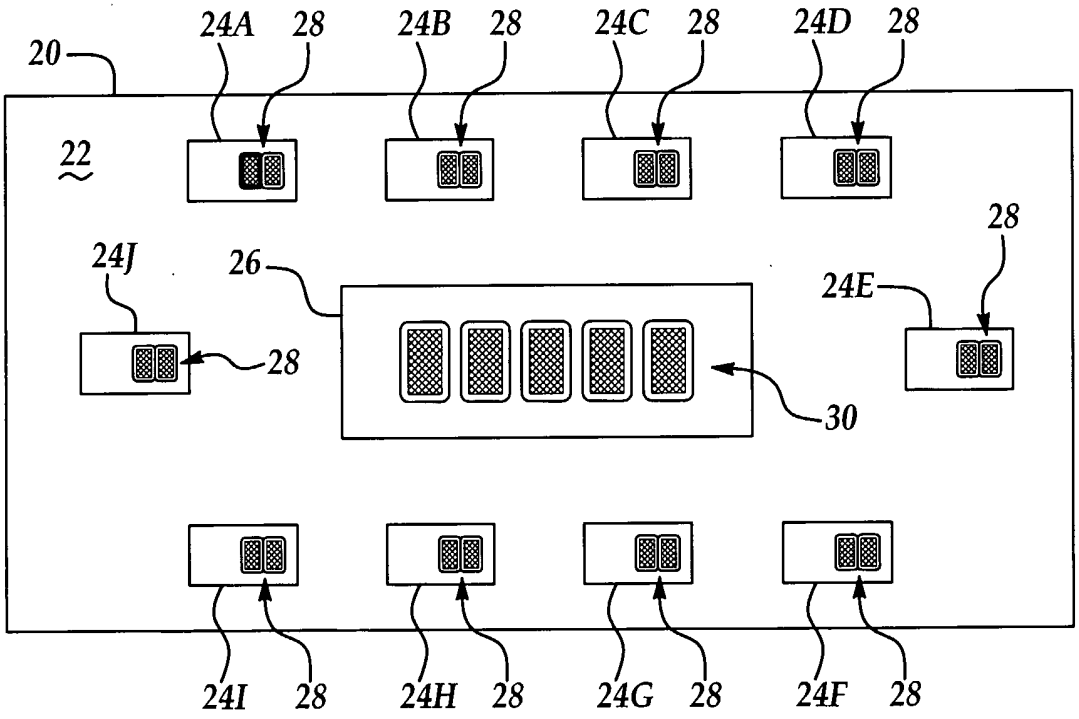

Figure 3

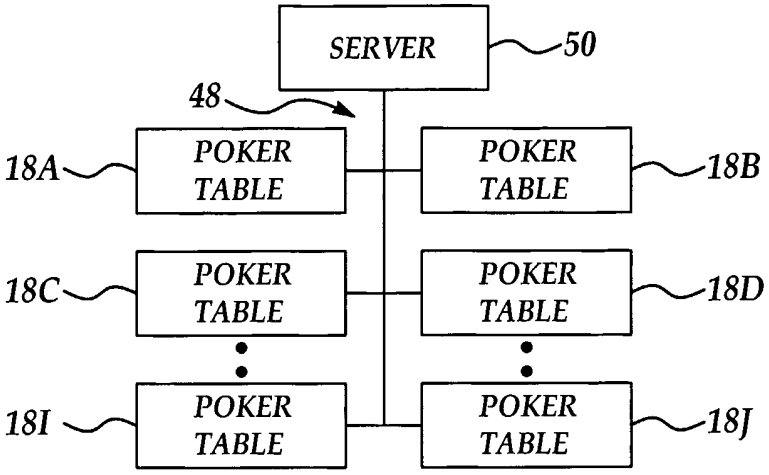

Figure 4

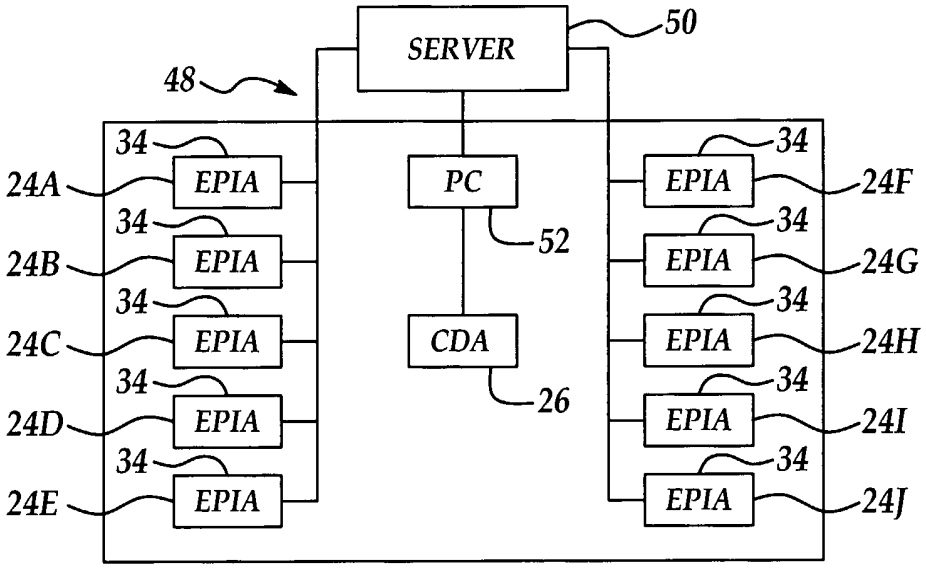

Figure 5

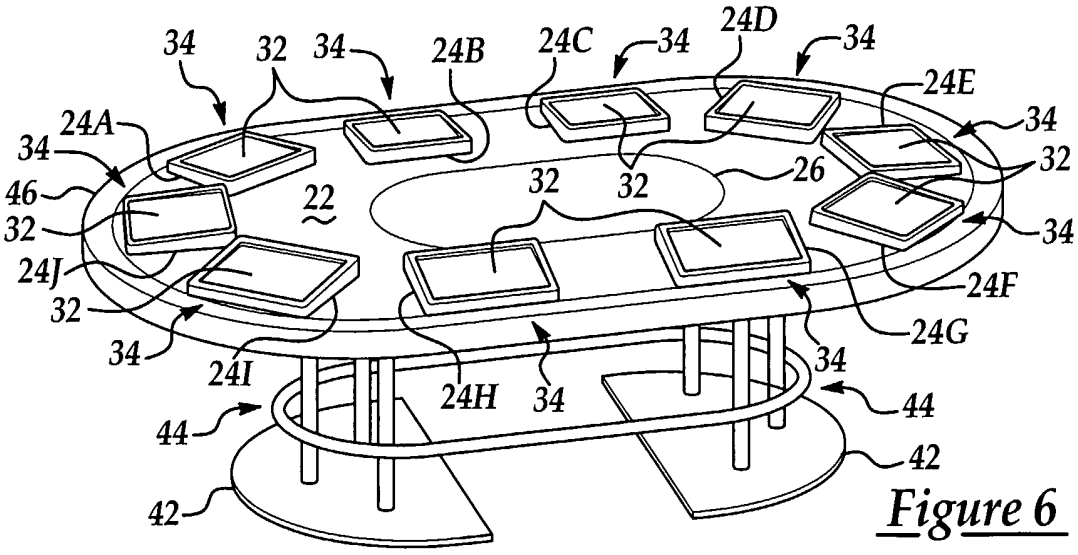

Figure 6

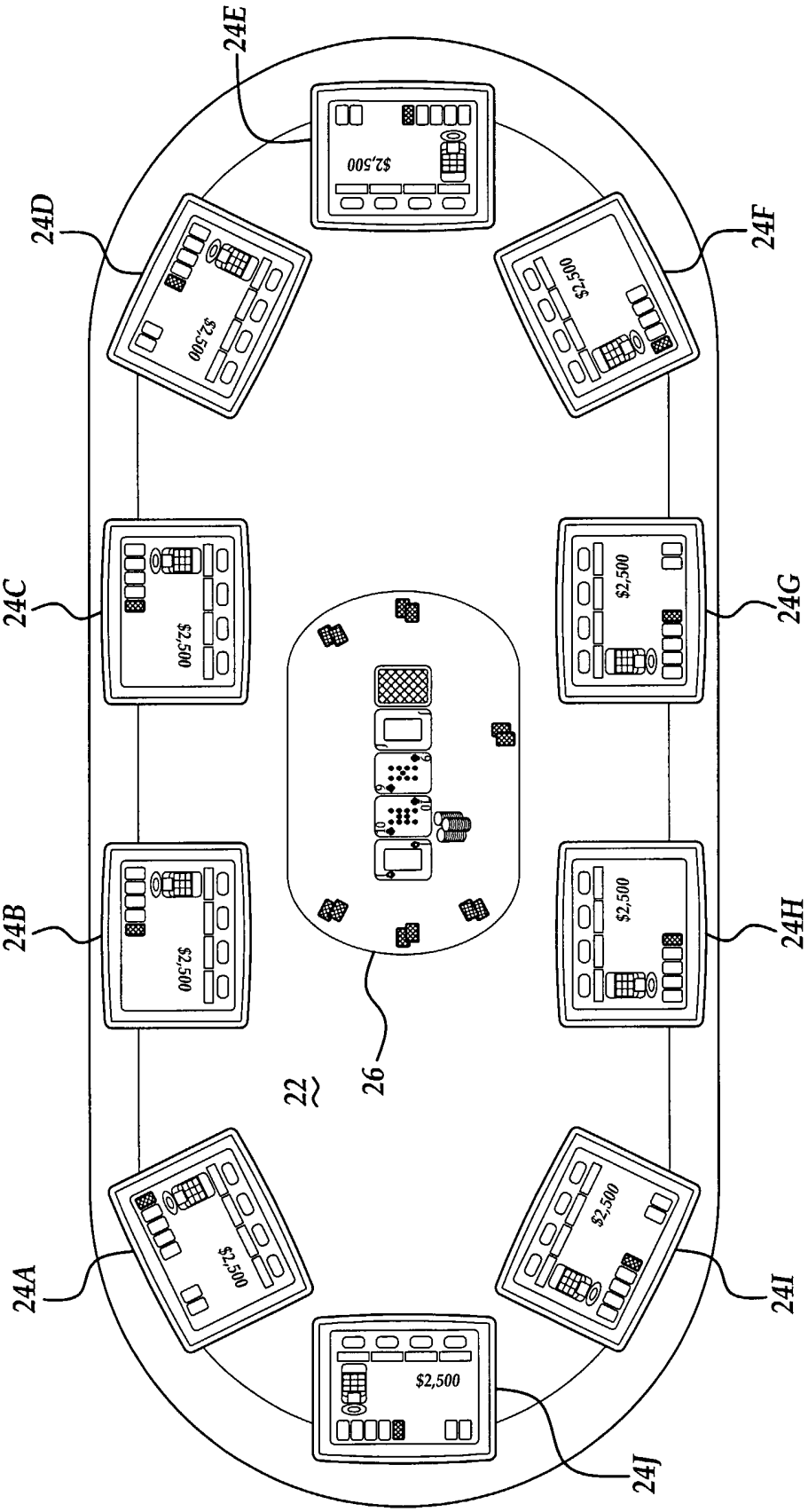

Figure 7

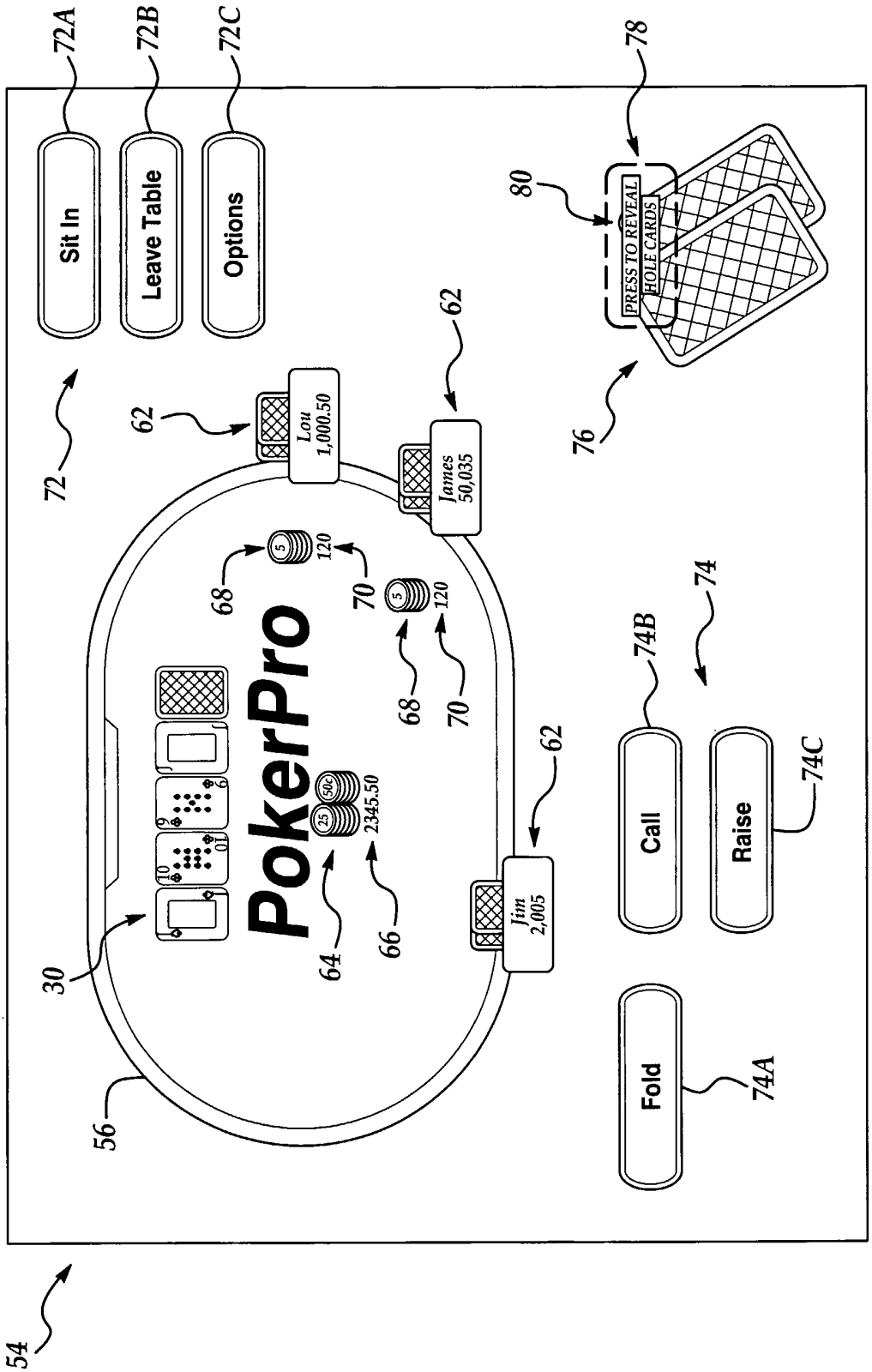
Sit In
Leave Table
Options
PRESS TO REVEAL HOLE CARDS
Lou 1,000.50
James 50,035
Jim 2,005
PokerPro
Call
Raise
Fold
72A
72B
72C
72
78
80
76
62
68
70
120
64
66
2345.50
30
56
74
74A
74B
74C
54

Figure 9

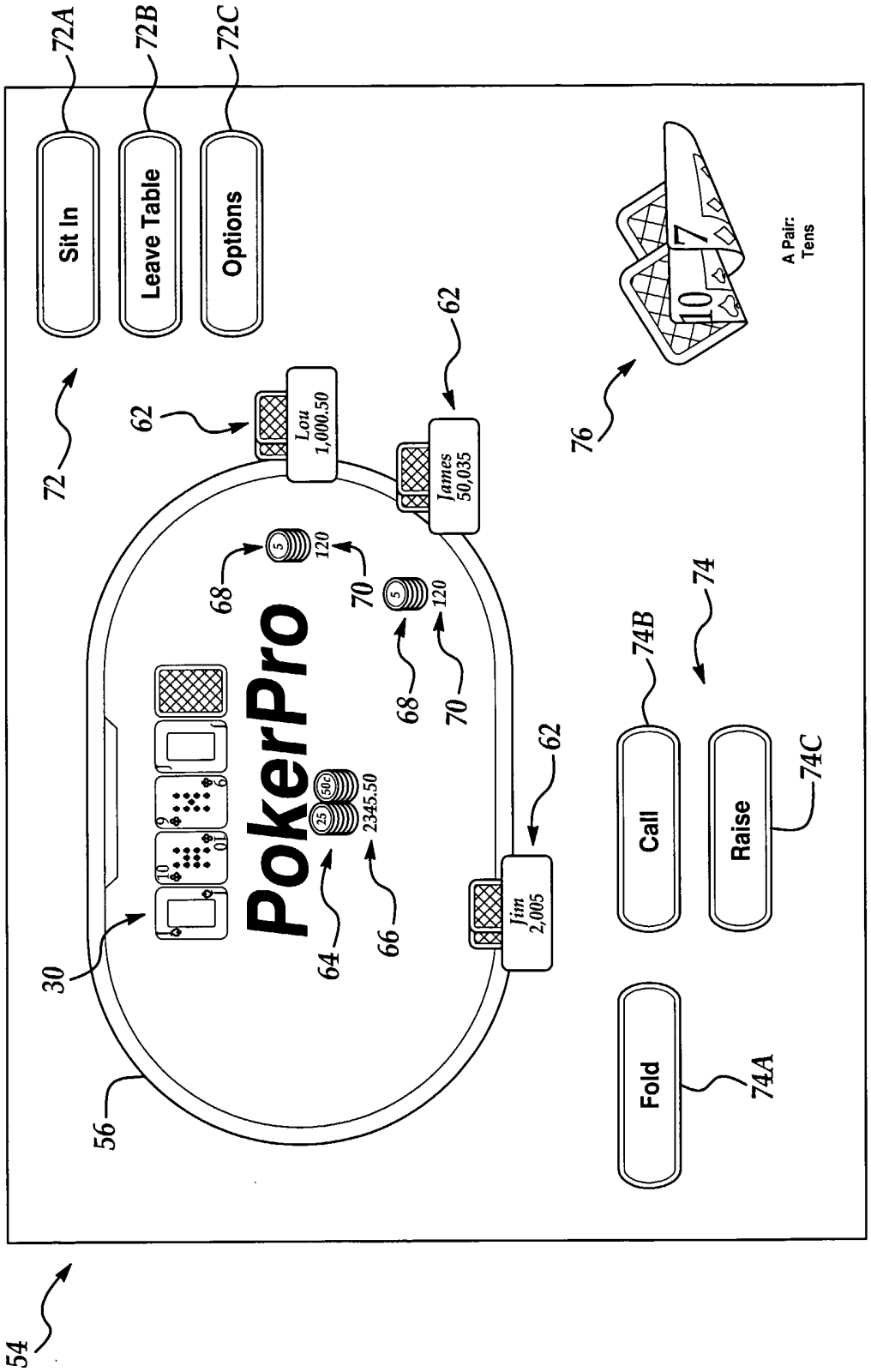
72A
72B
72C
Sit In
Leave Table
Options
72
62
Lou
1,000.50
James
50,035
76
A Pair:
Tens
10
7
68
70
120
5
PokerPro
2345.50
25
50c
64
66
30
Jim
2,005
74
74B
Call
Raise
74C
Fold
74A
56
54

Figure 10

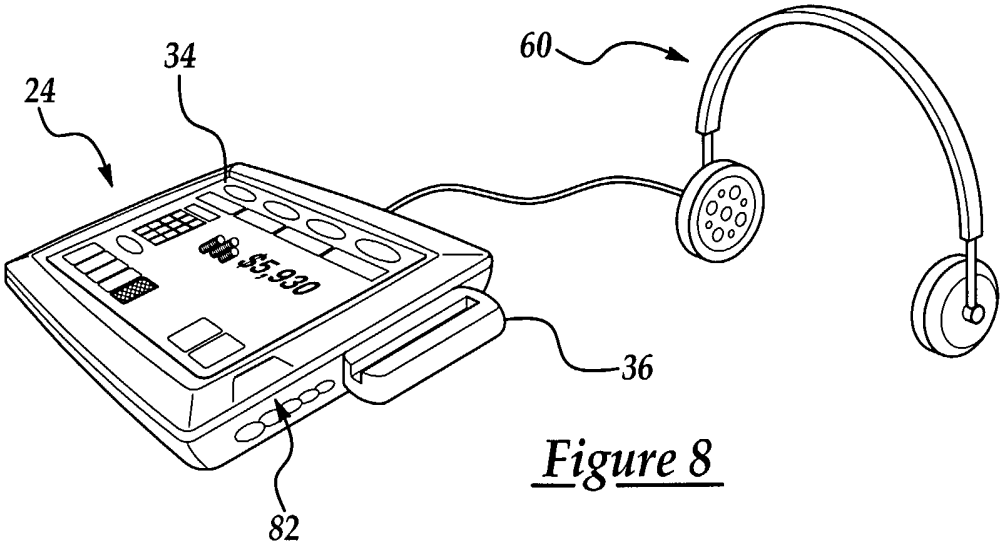

Figure 8

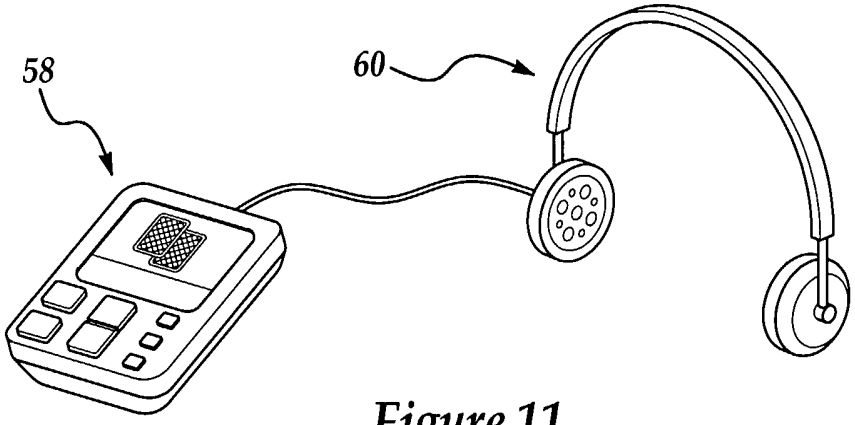

Figure 11

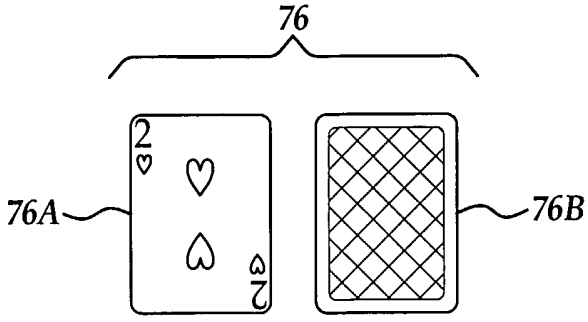

Figure 12

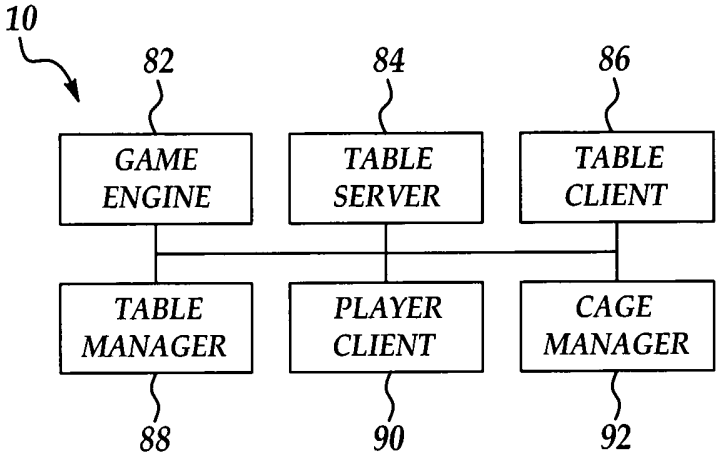

Figure 13A

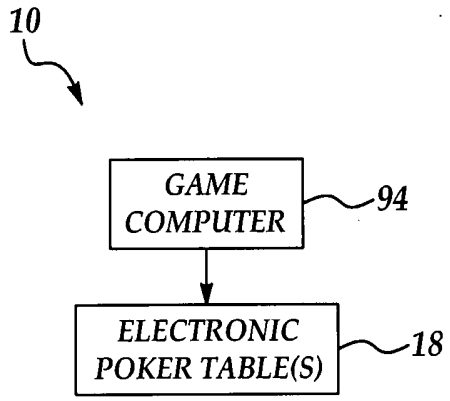

Figure 13B

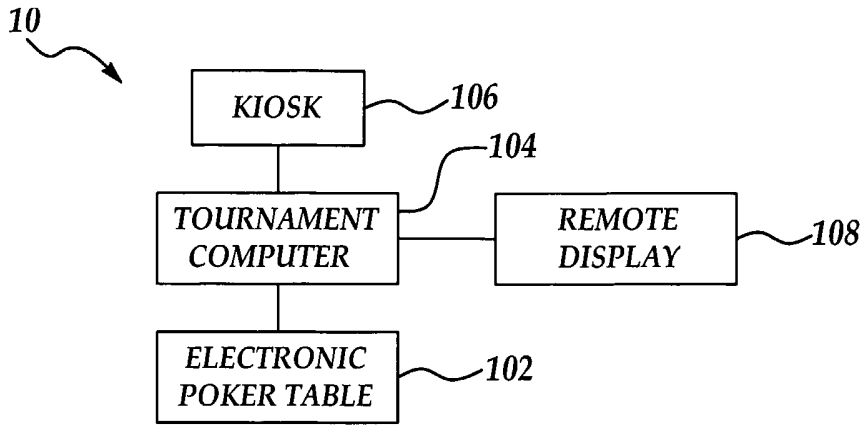

Figure 14A

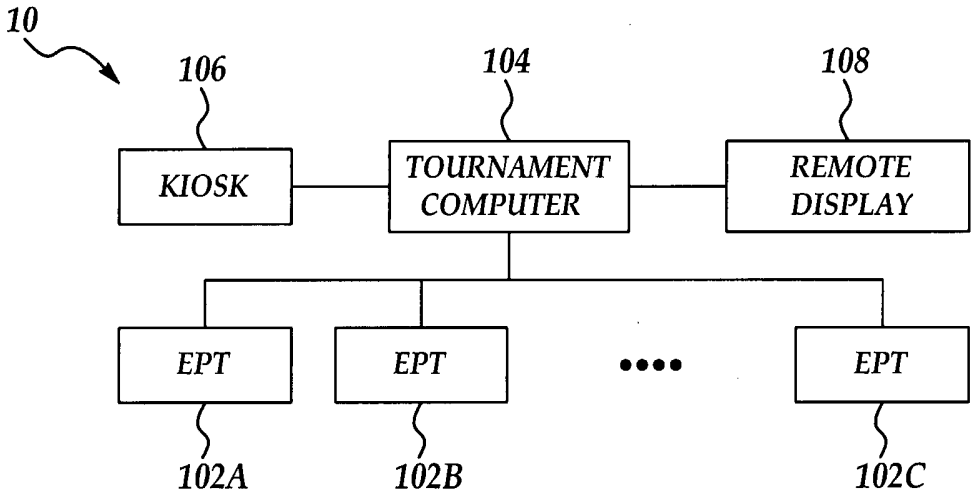

Figure 14B

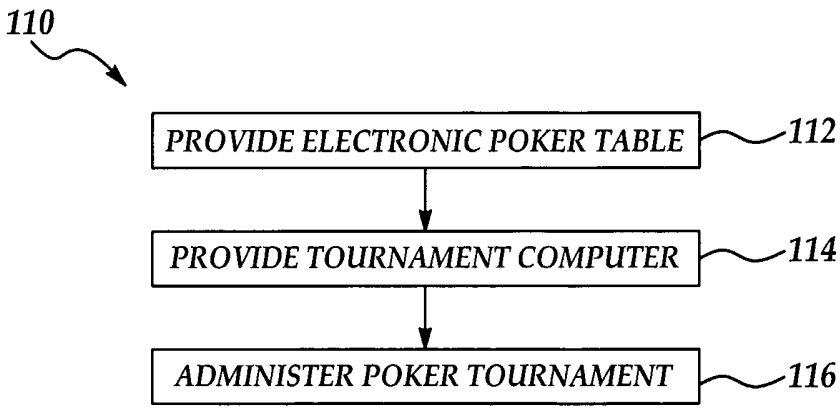

Figure 15A

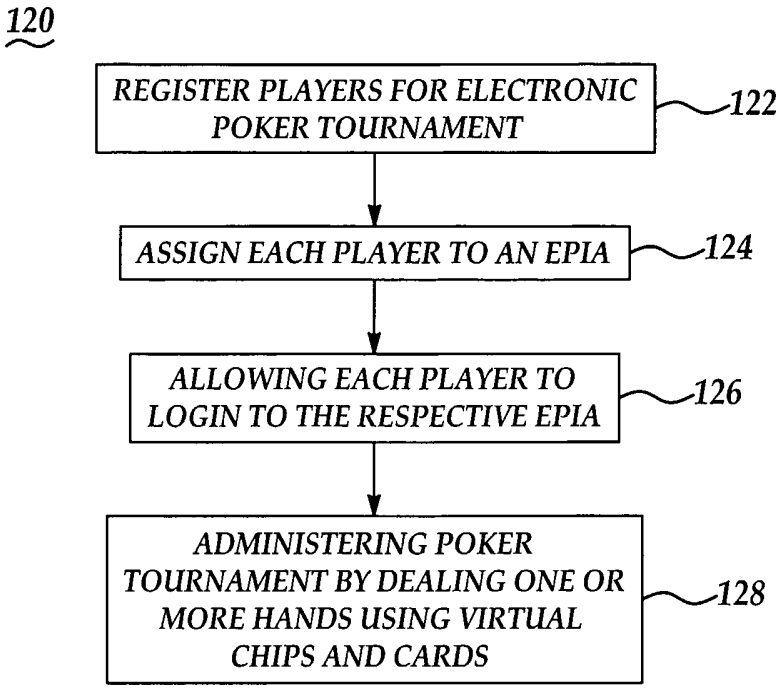

Figure 15B

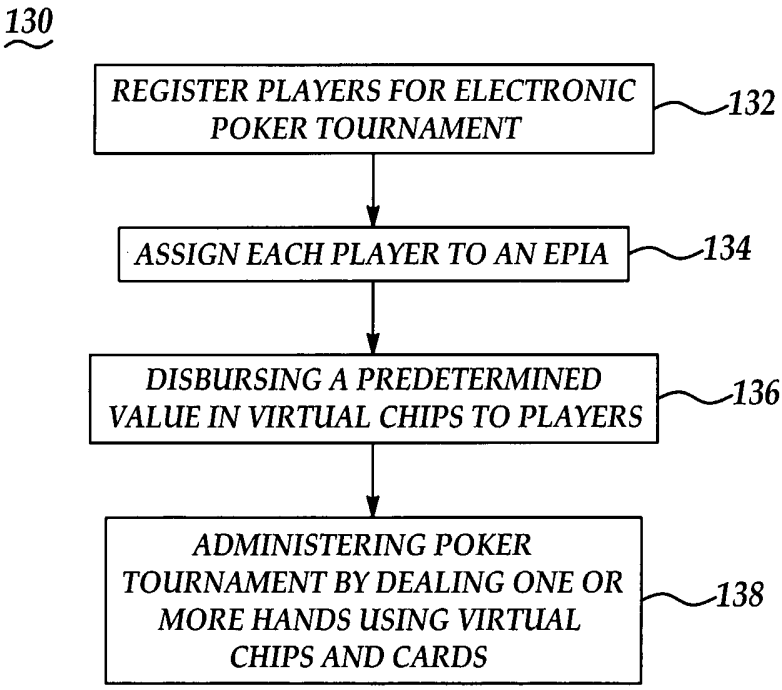

Figure 15C

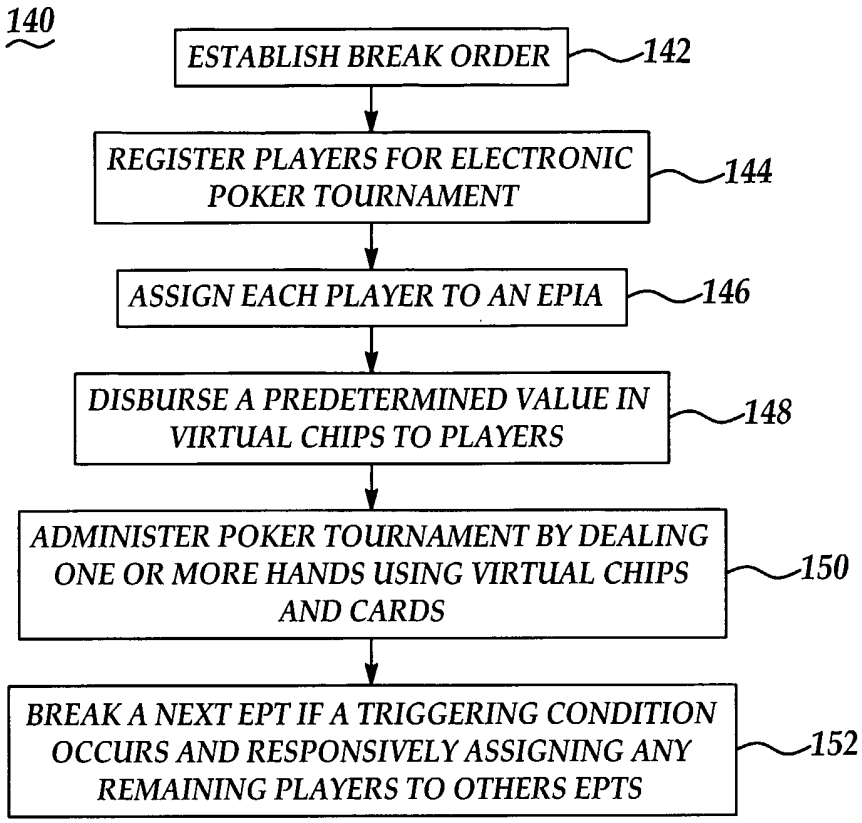

Figure 15D

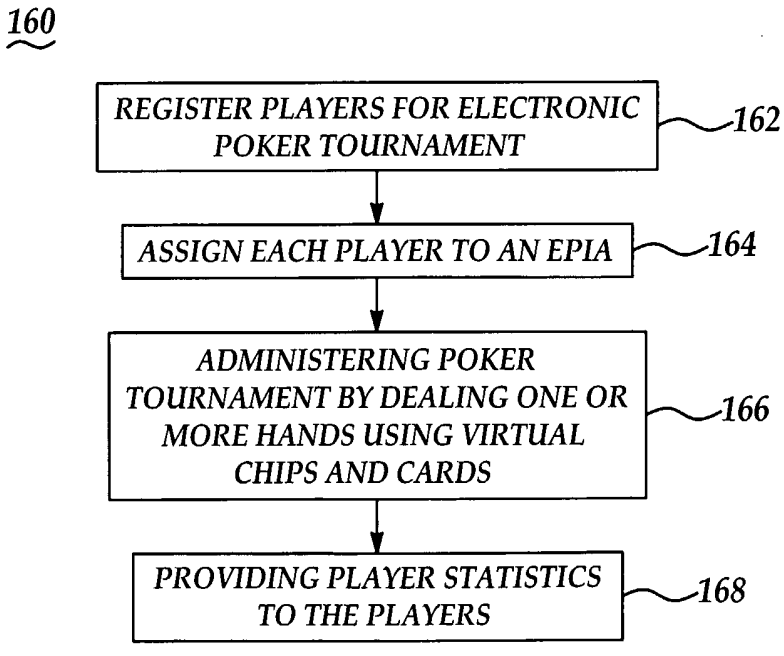

Figure 15E

INTERNATIONAL SEARCH REPORT

International application No
PCT/US2005/030901

A. CLASSIFICATION OF SUBJECT MATTER
G07F17/32

According to International Patent Classification (IPC) or to both national classification and IPC

B. FIELDS SEARCHED

Minimum documentation searched (classification system followed by classification symbols)
G07F

Documentation searched other than minimum documentation to the extent that such documents are included in the fields searched

Electronic data base consulted during the international search (name of data base and, where practical, search terms used)
EPO-Internal, WPI Data, PAJ

C. DOCUMENTS CONSIDERED TO BE RELEVANT

Category*	Citation of document, with indication, where appropriate, of the relevant passages	Relevant to claim No
X	US 5 669 817 A (TARANTINO ET AL) 23 September 1997 (1997-09-23) figures 1,4,6 column 1, line 55 - line 64 column 3, line 25 - line 26 column 3, line 64 - line 65	1-117
X	US 6 165 069 A (SINES ET AL) 26 December 2000 (2000-12-26) figures 3,4 column 9, line 2 - line 49	1-117
X	US 4 760 527 A (SIDLEY ET AL) 26 July 1988 (1988-07-26) figure 9 column 2, line 1 - line 45	1-117

-/--

[X] Further documents are listed in the continuation of Box C

[X] See patent family annex

* Special categories of cited documents

"A" document defining the general state of the art which is not considered to be of particular relevance

"E" earlier document but published on or after the international filing date

"L" document which may throw doubts on priority claim(s) or which is cited to establish the publication date of another citation or other special reason (as specified)

"O" document referring to an oral disclosure, use, exhibition or other means

"P" document published prior to the international filing date but later than the priority date claimed

"T" later document published after the international filing date or priority date and not in conflict with the application but cited to understand the principle or theory underlying the invention

"X" document of particular relevance, the claimed invention cannot be considered novel or cannot be considered to involve an inventive step when the document is taken alone

"Y" document of particular relevance, the claimed invention cannot be considered to involve an inventive step when the document is combined with one or more other such documents, such combination being obvious to a person skilled in the art

"&" document member of the same patent family

Date of the actual completion of the international search	Date of mailing of the international search report
2 February 2006	10/02/2006

Name and mailing address of the ISA/	Authorized officer
European Patent Office, P B 5818 Patentlaan 2 NL - 2280 HV Rijswijk Tel (+31-70) 340-2040, Tx. 31 651 epo nl, Fax: (+31-70) 340-3016	Kemény, M

INTERNATIONAL SEARCH REPORT

International application No
PCT/US2005/030901

C(Continuation). DOCUMENTS CONSIDERED TO BE RELEVANT

Category*	Citation of document, with indication, where appropriate, of the relevant passages	Relevant to claim No
X	WO 00/16863 A (GAME DATA, INC) 30 March 2000 (2000-03-30) abstract figures 1,2a,3b,4b,4c,4d,4e,5b	1-117
A	US 4 614 342 A (TAKASHIMA ET AL) 30 September 1986 (1986-09-30) figure 1	1-117

INTERNATIONAL SEARCH REPORT

ormation on patent family members

International application No
PC[redacted]US2005/030901

Patent document cited in search report	Publication date	Patent family member(s)	Publication date
US 5669817 A	23-09-1997	NONE	
US 6165069 A	26-12-2000	US 2001000778 A1	03-05-2001
US 4760527 A	26-07-1988	NONE	
WO 0016863 A	30-03-2000	AU 5819699 A	10-04-2000
US 4614342 A	30-09-1986	JP 1669969 C	12-06-1992
		JP 3031072 B	02-05-1991
		JP 60222077 A	06-11-1985