Jan. 5, 1932. A. COLEMAN 1,839,834

RURAL MAIL BOX

Filed Feb. 13, 1929 3 Sheets-Sheet 1

Fig. 1.

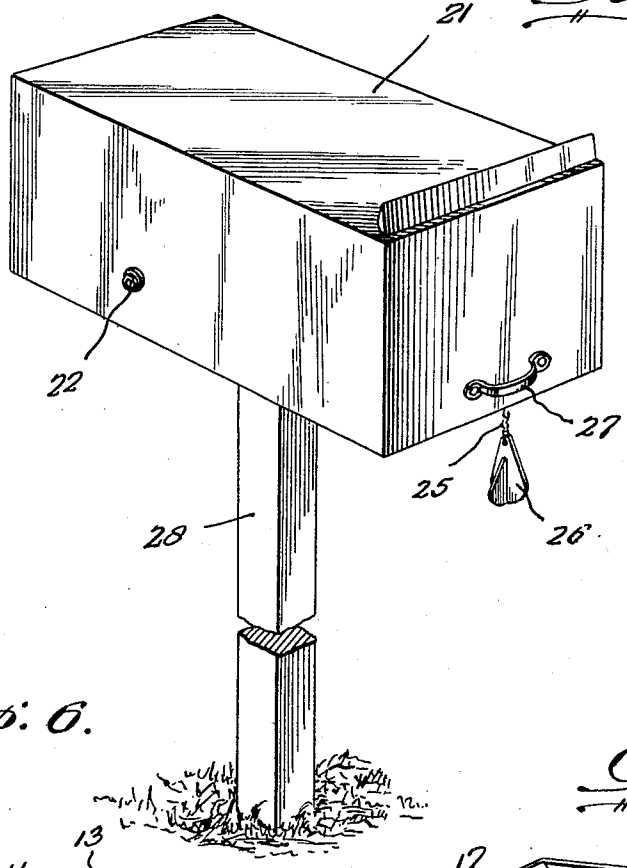

Fig. 6.

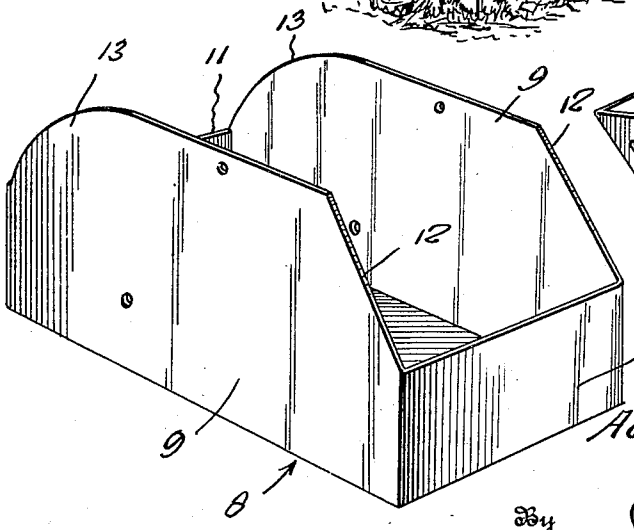

Fig. 7.

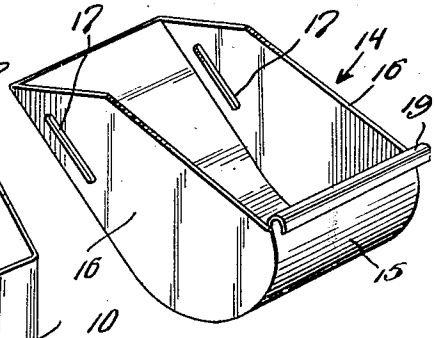

Inventor

Adney Coleman,

By J. Stanley Birch

Attorney

Jan. 5, 1932. A. COLEMAN 1,839,834

RURAL MAIL BOX

Filed Feb. 13, 1929 3 Sheets-Sheet 2

Fig. 2.

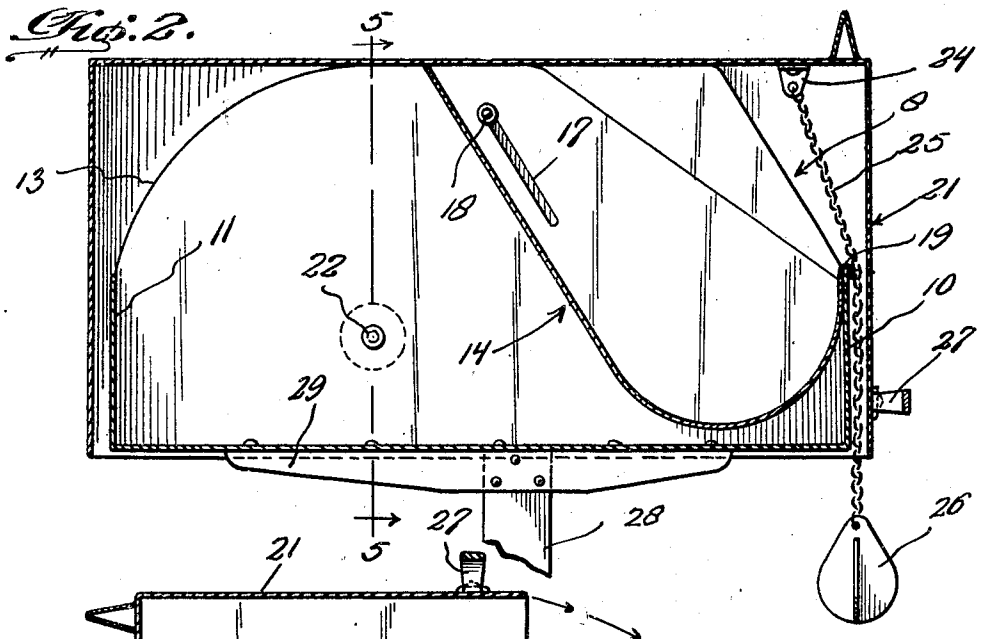

Fig. 3.

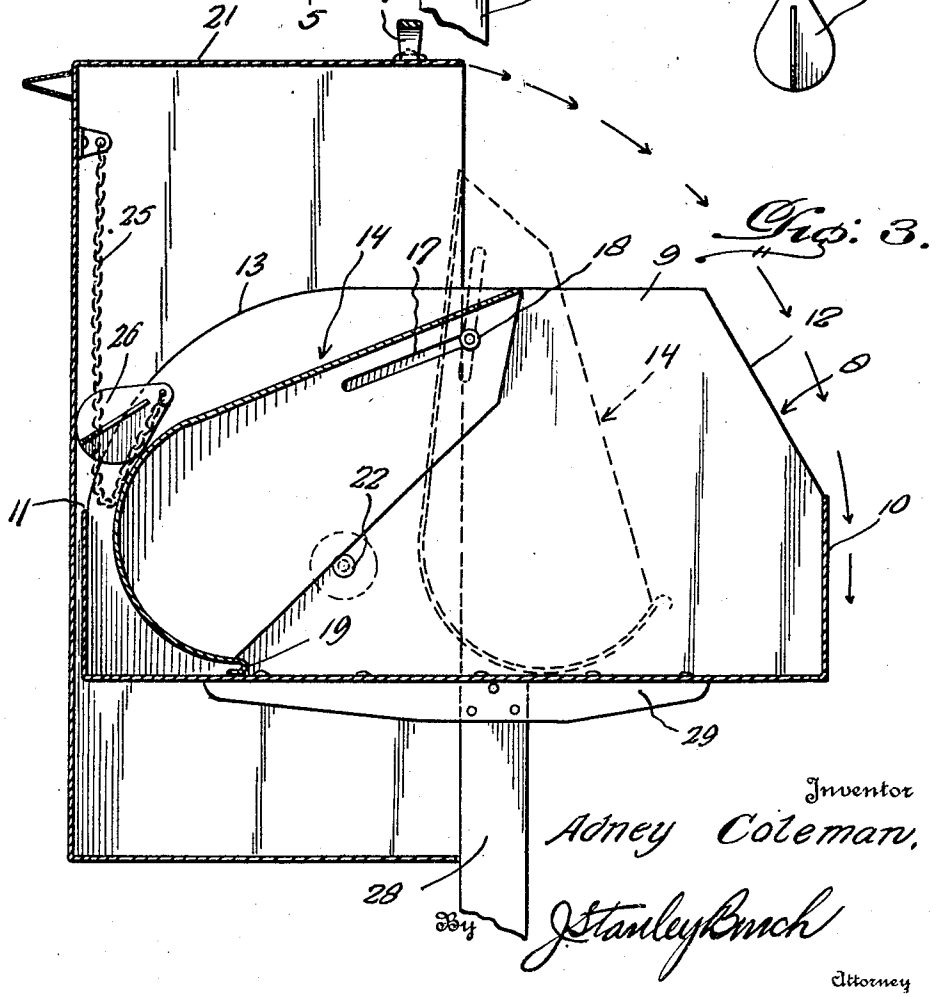

Inventor

Adney Coleman,

By J. Stanley Finch

Attorney

Jan. 5, 1932. A. COLEMAN 1,839,834

RURAL MAIL BOX

Filed Feb. 13, 1929 3 Sheets-Sheet 3

Fig. 4.

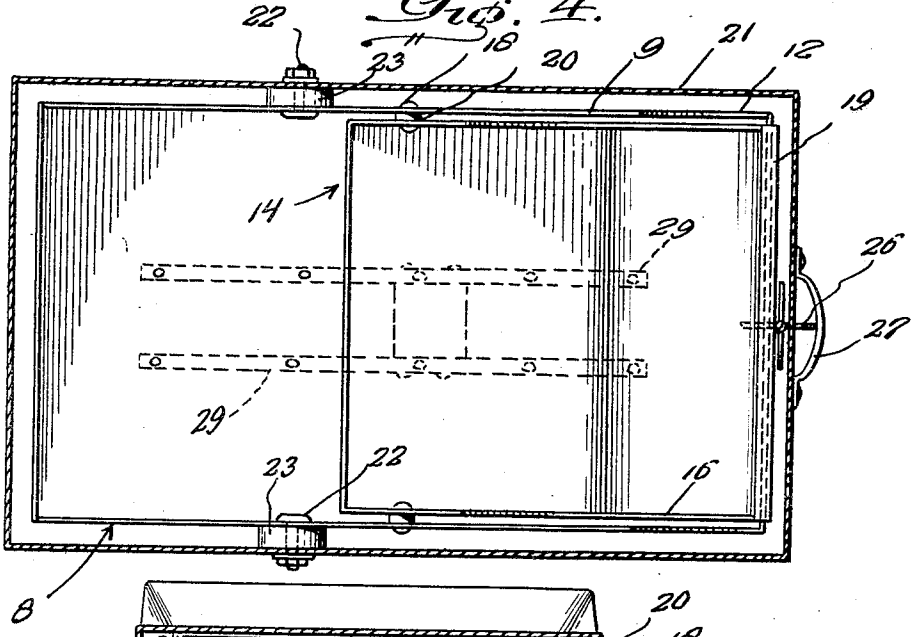

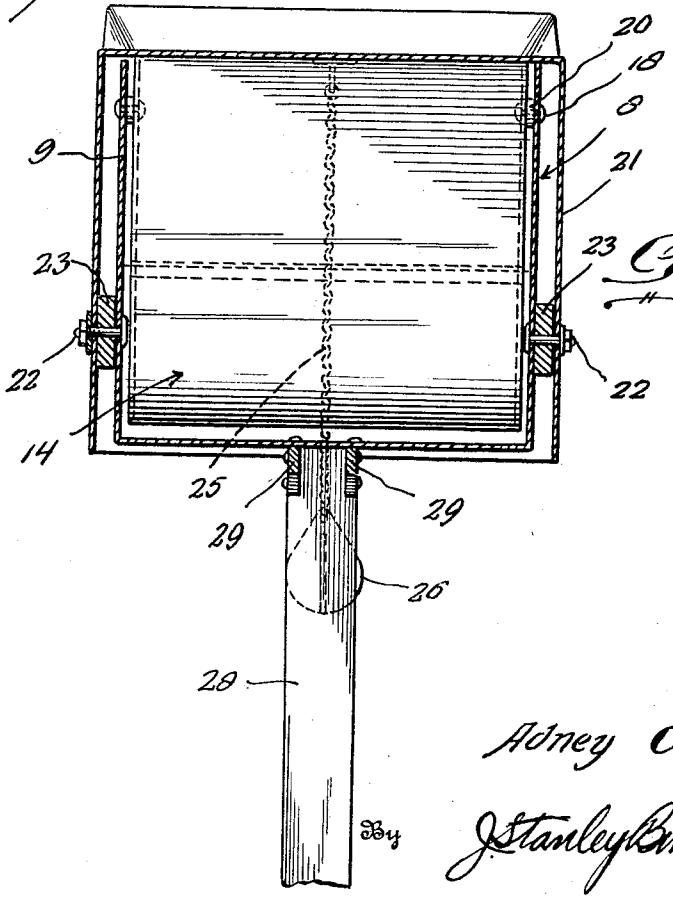

Fig. 5.

Inventor

Adney Coleman

By J. Stanley Church

Attorney

Patented Jan. 5, 1932 1,839,834

UNITED STATES PATENT OFFICE

ADNEY COLEMAN, OF MOUNT GILEAD, OHIO

RURAL MAIL BOX

Application filed February 13, 1929. Serial No. 339,643.

This invention relates to an improved mail box especially adapted for use at farm residences and similar places of abode in rural districts.

My principal object is to generally improve upon inventions of this class by providing a mail box which comprises interfitting complemental receptacles, and an appropriate swingably mounted cover therefor, this arrangement being particularly advantageous in that it provides for convenient placement and removal of both large and small mail articles and packages.

More specifically stated, the invention is characterized by inner and outer receptacles so constructed and cooperating with each other as to permit the inner receptacle to be normally arranged in an appropriate position for convenient reception and removal of small articles of mail, and to be manually moved to an out-of-the-way position when desired in order to utilize the outer receptacle for comparatively large packages, such as for instance, parcel post articles.

A further object is to provide a multiple receptacle assembly and a co-related cover pivotally mounted on the outer receptacle in a way to facilitate opening and closing, and to space the cover from said outer receptacle in order to minimize snow and ice accumulation, such as would decidedly interfere with the free opening and closing, were the space not present.

In carrying out the invention, I have endeavored to provide a structure which is economical in construction, practicable and efficient in performance and operation, and distinguished by a structural arrangement of parts not heretofore equaled in this art.

In the drawings:

Figure 1 is a perspective view of a mail box constructed in accordance with the present invention and attached to a supporting post to render it ready for use.

Figure 2 is a longitudinal sectional view through the complete structure showing the internal arrangement of details.

Figure 3 is a view based on Figure 2 showing the cover swung to open position and indicating the manner in which the inner receptacle is moved to an out-of-the-way position for depositing large packages.

Figure 4 is a horizontal sectional view through Figure 2.

Figure 5 is a vertical transverse sectional view taken approximately upon the plane of the line 5—5 of Figure 2.

Figure 6 is a perspective view of the box-like outer receptacle.

Figure 7 is a perspective view of the scoop-like inner receptacle.

The receiving portion of the structure comprises, as before indicated, two individual interfitting or telescopically arranged receptacles. The outer receptacle is generally designated by the reference character 8 and it is in the form of a substantially rectangular open top box. As shown in Figures 3 and 6 in particular, this receptacle embodies spaced parallel side walls 9 having connection with comparatively short front and rear walls 10 and 11 respectively. The forward edges of the side walls 9 are cut or beveled off as indicated at 12. Likewise, the rear edges are curved rearwardly and downwardly as at 13 to provide for clearance.

The outer receptacle 8 is adapted to receive parcel post and similar large packages and in addition it provides a housing for the complemental or inner receptacle 14. The receptacle 14 as shown in Figure 7 is of scoop-like design and comprises a longitudinally curved bottom 15 connected with spaced parallel side walls 16. The side walls are formed near their rear ends with longitudinally elongated slots 17 to pivotally and slidably connect the inner receptacle as at 18 with the side walls of the main or outer receptacle. The bottom 15 terminates in a curved or hook-shaped lip 19 which, when the inner receptacle is in proper or normal position, rests down on the top edge of the short front wall 10 as shown plainly in Figure 2. This is the ordinary or normal position for the inner receptacle. However, it can be lifted up and properly manipulated and swung to the dotted line position shown in Figure 3 and slid back to the full line position shown in the same figure wherein the forward portion of the main receptacle is

clear for reception of comparatively large mail packages.

It is to be observed in Figures 4 and 5 that the pivotal and slidable connection 18 between the two receptacles embodies a spacing washer 20 to facilitate freedom of movement of the inner receptacle within the outer one. This pin and slot pivotal and slidable connection together with a spacing between the walls of the receptacles insures easy movement of the inner receptacle from the position shown in Figure 2 to the out-of-the-way position shown in Figure 3.

The closure or cover for the receptacles designated by the reference character 21 is in the form of an open-bottom rectangular box pivotally connected by bolts or the like 22 to the outer receptacle as shown plainly in Figures 4 and 5. It is to be observed here that spacing washers 23 are provided to make a clearance space between the cover and the outer receptacle. As before stated this space is designed primarily to facilitate freedom of movement of the cover and to prevent accumulation and depositing of ice and snow which, if the parts were too close together, would cause sticking and make it difficult to open or close the cover. Incidentally it will be seen in Figure 2 that a bracket 24 carries a depending chain 25 adapted to be passed down though the front space in order to display a suitable indicator 26 on the lower end of the chain. The purpose of this indicator is to show when mail has been deposited. Attention is also called to an operating handle 27 on the front wall of the cover. Moreover it is to be observed that the pivotal connections 22 between the cover and box 8 are located at a point between the center and rear end of the cover. This produces a desirable counter-balancing action which aids in causing the cover to drop to closed position as shown by the arrows in Figure 3. Moreover it aids in holding the cover open. Hence, the mail man simply lifts the cover up and swings it back, and it stays open.

It is convenient in practice to support the entire structure on a post or the like 28. In doing this, I provide rails 29 on the bottom of the box 8 and secure the rails to the box by rivets or the like and in turn fasten the rails to the upper end of the post in any suitable manner. Consequently when the cover is swung to open position as shown in Figure 3 the lower portion, that is the portion below the pivot, will bear against the post so that the cover is substantially self-sustaining in open position. It follows too, that a slight pull or movement downwardly on the handle 27 will cause the cover to drop by gravity to closed position.

With this arrangement it is obvious that under normal circumstances the inner scoop-like receptacle 14 occupies the forwardly inclined position shown in Figure 2. At this time the hook lip 19 is engaged over the top edge of the short front wall 10 of the outer receptacle 8. Small articles are placed in this and can be subsequently and conveniently scooped out with the hand. When however it is desired to deposit larger packages such as would not conveniently fit within the receptacle 14, the latter receptacle is swung to the out-of-the-way position shown in Figure 3. It is simply necessary to lift up on the hooked lip 19 and through the medium of the pin and slot pivotal connection 18, this receptacle can be swung to the dotted line position and finally slid to the full line position shown in Figure 3.

A careful consideration of the description in conjunction with the drawings will permit a clear comprehension of the structure, advantages and features of the invention to be had. Consequently a more lengthy description is thought unnecessary.

Minor changes in shape, size and rearrangement of details, coming within the field of invention claimed may be resorted to in actual practice if desired.

I claim:

1. A rural mail box structure of the class described comprising a fixedly mounted rectangular outer package receptacle, an inner scoop-like small article receptacle arranged within said outer receptacle, elongated slots in the sides of the scoop and extending longitudinally thereof for slidably receiving a pin extending through the package receptacle sides, and a cover for said receptacles.

2. In a rural mail box structure of the class described, a fixedly mounted main receptacle in the form of a rectangular box including spaced parallel side walls connected together by front and rear walls, said front wall being comparatively short, an inner small article scoop having elongated slots in the sides thereof for cooperating with pins extending from the main receptacle and arranged for swinging movement within said main receptacle and having a hook releasably connected with the upper edge of said short front wall, and a cover for said receptacles.

3. In a mail box structure of the class described, a fixedly mounted outer receptacle having a comparatively short front wall, a small article receptacle arranged within said outer receptacle and being of general scoop-like design and provided with elongated slots for slidably cooperating with pins extending from the outer receptacle and having a hooked lip engageable over the upper edge of said front wall, means for spacing said receptacles apart to facilitate swinging movement of the inner receptacle within the outer one, and a closure for said receptacles.

In testimony whereof I affix my signature.

ADNEY COLEMAN.