April 23, 1929. F. L. RAWSON 1,710,551

PRINTING MACHINE

Filed May 7, 1928 3 Sheets-Sheet 1

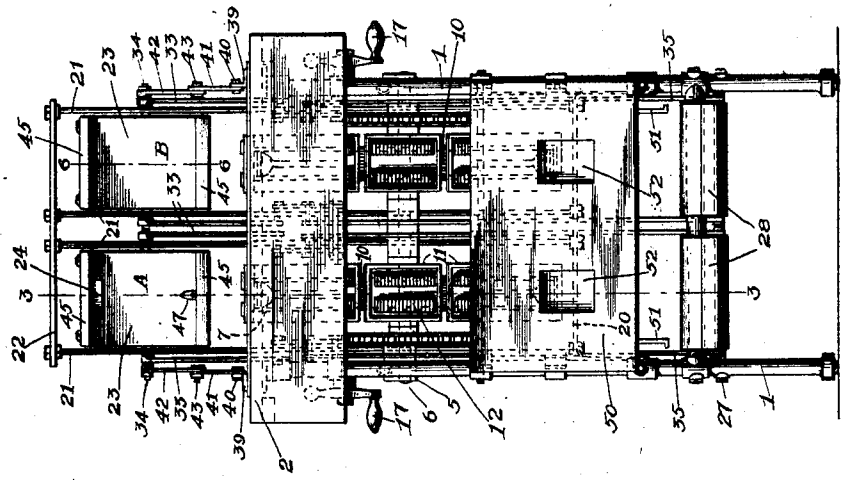

Fig. 2

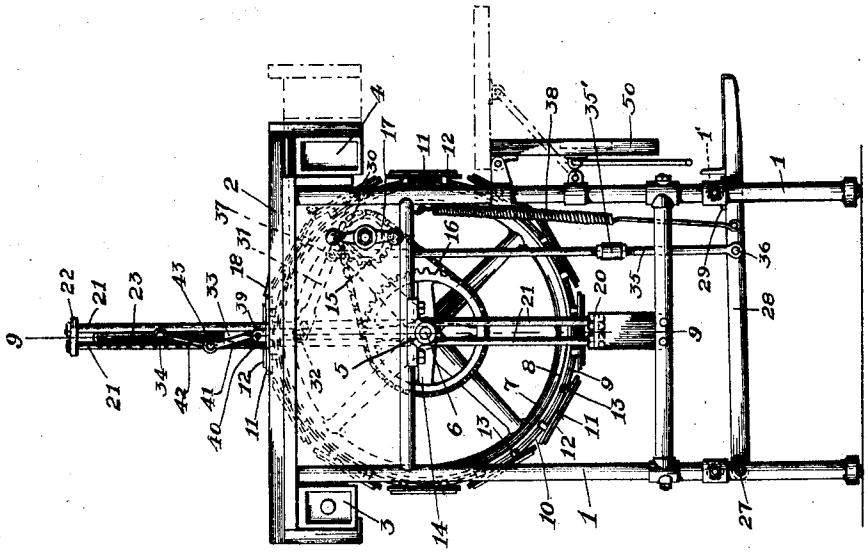

Fig. 1

*Inventor:*

FRANK L. RAWSON.

BY

Henry L. Chenery

Atty.

April 23, 1929. F. L. RAWSON 1,710,551

PRINTING MACHINE

Filed May 7, 1928 3 Sheets-Sheet 2

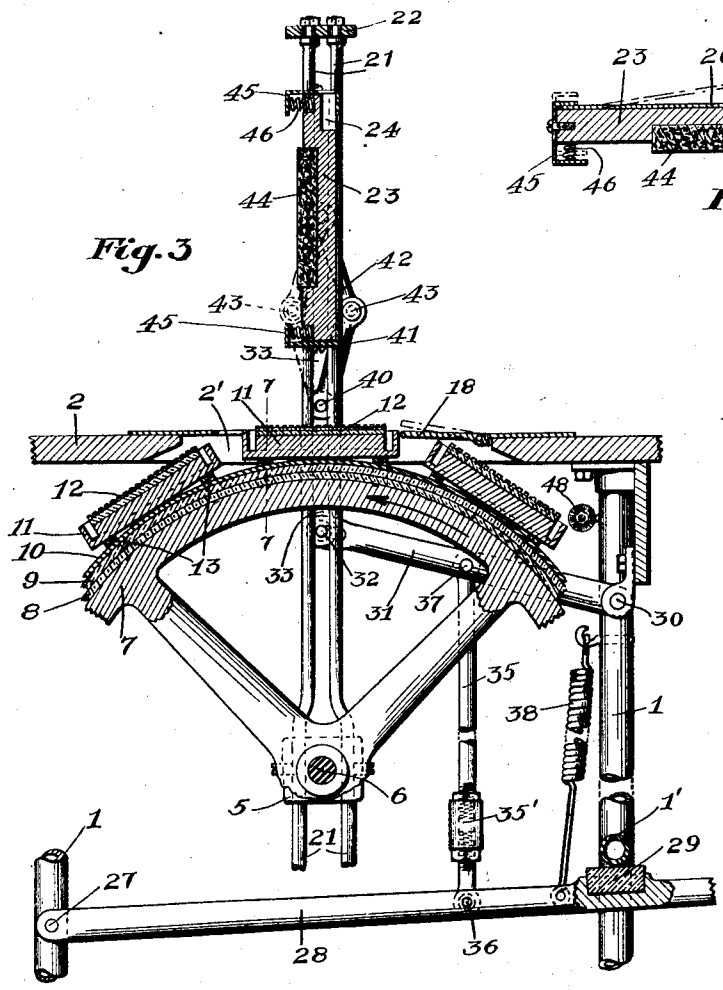


Fig. 3

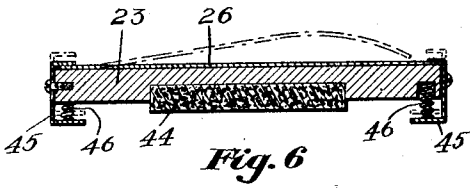


Fig. 6

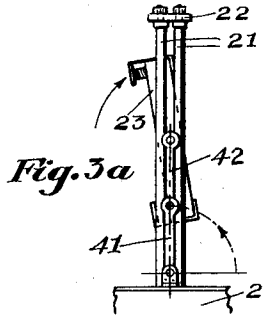


Fig. 3a

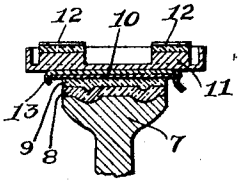


Fig. 7

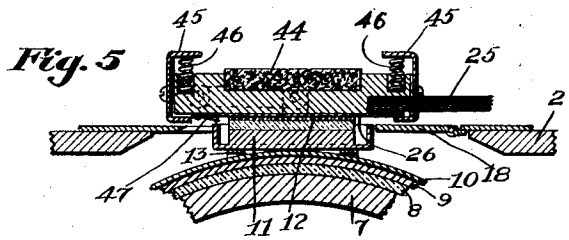


Fig. 5

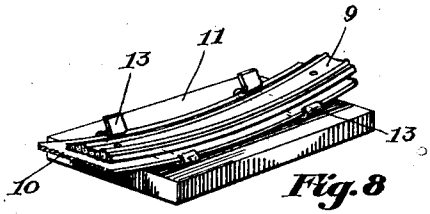


Fig. 8

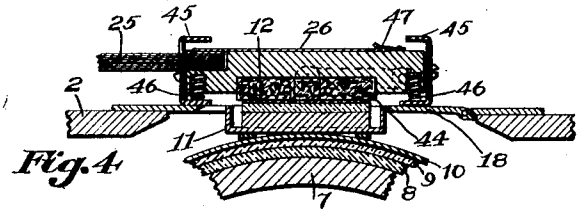


Fig. 4

Inventor:
FRANK L. RAWSON.

BY Henry L. Chenery
Atty.

April 23, 1929. F. L. RAWSON 1,710,551

PRINTING MACHINE

Filed May 7, 1928 3 Sheets-Sheet 3

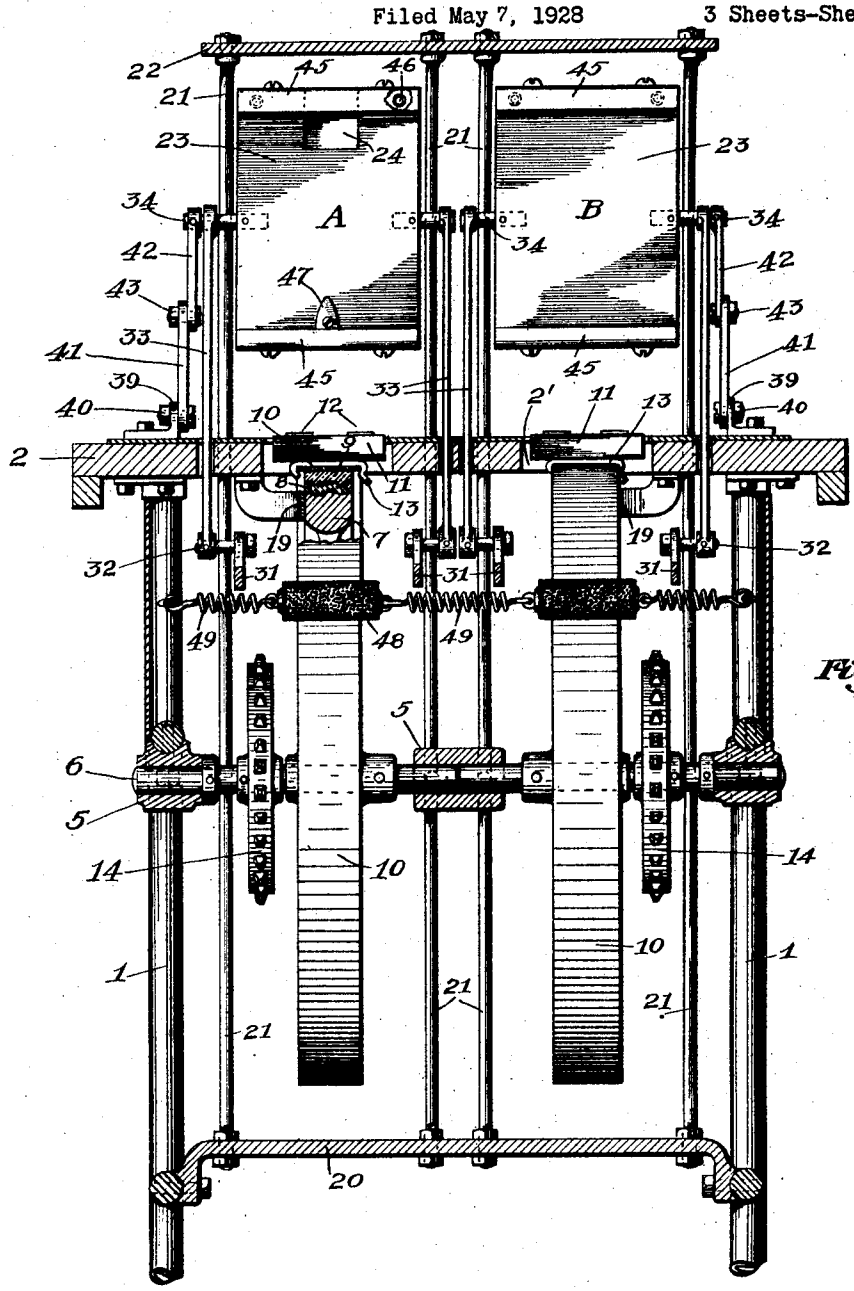


Fig. 9

Inventor:
FRANK L. RAWSON.

BY
Henry L. Chenery
ATTY.

Patented Apr. 23, 1929. 1,710,551

# UNITED STATES PATENT OFFICE.

FRANK L. RAWSON, OF PORTLAND, MAINE.

## PRINTING MACHINE.

Application filed May 7, 1928. Serial No. 275,779.

In the counting rooms and offices of banks, insurance companies and many of the large mercantile houses having their own somewhat specialized systems of accounting, there are required for tabulating and recording purposes, certain blank forms which have, heretofore, usually been supplied by mercantile printers.

In some cases the expedient of doing their own printing has been resorted to by these concerns, using for the purpose small, hand-operated devices which not only are slow in production but give very inferior results in the grade of work produced.

Furthermore, these hand-operated stamping affairs are much disliked by the general run of office help, especially by the female employees, as they require considerable strength to operate, soil the hands by contact with the inked parts and are quite apt to smear the blank with ink or blur the copy unless painstaking care is exercised in handling them.

My invention relates, in general terms, to printing machinery, but more particularly applies to a foot or power operated machine for offices, and with which any formal printed matter may be done on cards, covers for coupon books, pads and the like, and accomplished with dispatch, neatness and accuracy.

One of the objects of my invention is to provide apparatus which can be operated by any of the smaller paid employes in the office, the work being performed at times when they are not otherwise occupied,—resulting in a saving in cost of the printed matter.

Another object is to make the machine more or less automatic in its action, requiring the least amount of handling of parts, once the proper type set-up is made.

A specific object resides in the arrangement for conveying the type forms in rotative order to the printing position. I employ for this purpose a wheel or drum on which a plurality of the type forms are mounted, the wheel being rotated to bring any particular one of the respective type forms from which it is desired to obtain an imprint into the position in which the printing operation can be performed.

Another object is the means provided for making the chases in which the type is set, quickly attachable and detachable to and from, respectively, the conveying element.

A further and very important object is the method of resiliently mounting these type chases on the rotatable wheel, giving the type a yieldableness when the impression is being taken.

And a still further object concerns the novel construction and operation of the combined blank carrier and inking pad, the actuation of which, both to ink the type and strike of an impression, is accomplished solely by two strokes of a foot treadle.

Other objects and advantages will be apparent from the description hereinafter found in the specification when taken in connection with the accompanying drawings wherein is disclosed one embodiment which, at the present time, I consider preferable to other possible forms in which the invention might be carried out.

In the drawings,—

Fig. 1 is an end elevation of my printing machine;

Fig. 2 is a front elevation thereof;

Fig. 3 is a fragmentary sectional elevation, taken on line 3—3, Fig. 2;

Fig. 3ª is a view showing the relative positions of certain elements in the machine at a certain period in the operation thereof;

Fig. 4 is a sectional view of the blank carrier showing the ink pad in position to ink the type;

Fig. 5 is a sectional view, similar to Fig. 4, except that the blank carrier is in reverse position and the blank receiving an impression;

Fig. 6 shows a section through a modified form of blank carrier, section being taken on line 6—6, Fig. 2;

Fig. 7 is a sectional view taken on line 7—7, Fig. 3;

Fig. 8 is a perspective view of the inner side of a type chase, showing the elements which secure it to the flexibly mounted band, and

Fig. 9 is a framentary, longitudinal sectional elevation of the machine, certain parts being shown in full lines and the sectioned portion taken on line 9—9, Fig. 1.

Similar reference characters identify like parts in all views.

Referring to the drawings, 1 represents a stand or frame to which the different elements of the machine are attached.

On the top of the frame is a table 2, beneath and at one end of which is a drawer 3

for tools, and at the other end a drawer 4 in which type chases having various arrangements of type thereon are stored.

Journalled in bearings 5 is a shaft 6 and fixed thereon is a wheel 7 which may be made in various forms as to the spoke or web construction, but always incorporating in its make-up a rim on which may be suitably secured a generally flat rubber band 8.

Before proceeding further with the description of the machine it might be well to state that, while I have illustrated my invention as embodying two distinct printing outfits, the principles involved are susceptible of being in corporated in a single, or unitary structure, and my purpose of showing it as a duplex printer is principally for the reason that the two units cover practically every requirement in handling various forms of printed matter.

Surrounding the band 8 is a larger but quite similar band 9 which I fasten to the metal band 10 in any approved manner. It is conceivable that a single flexible element between the rim of the wheel and the band 10 might suffice, but I preferably employ the construction as shown.

The cross sectional forms of the bands and the rim of the wheel are illustrated in Fig. 7,—the convex and concave shapes being for the purpose of preventing transverse displacement of the bands from the wheel. The particular function exercised by these bands will hereinafter be more full set forth.

Disposed around the periphery of the band 10 are a plurality of type-holding chases 11, each containing a different set-up of type 12. The type itself may be either metal or rubber, and the composition made up of pi or slugs.

These chases are frictionally secured to the band 10 by strips 13 riveted to the chase and extending transversely across the band, one end being bent inwardly to clamp one edge of the band and the other similarly bent to embrace the opposite side of the band, an extended end being left on one side to provide a finger-hold with which the chase may be disengaged and removed from the band.

An opening 2′ is provided in the table 2 through which the chases may move as each is successively brought into printing position, as seen in Fig. 3. The wheel 7 is so located in the frame, vertically, that the top chase, or the one in printing position, extends slightly above the table, the arrangement as a whole constituting a rotary conveyor for the type chases.

On the shaft 6 is a large sprocket wheel 14 and located at any convenient position on the frame is a smaller sprocket wheel 15, the two being connected by the chain 16. A handle 17 serves as means by which to actuate the rotary conveyor mechanism.

A pawl 18, the free end of which abuts on the rearward end of the top chase, insures correct alignment of the latter when, after passing the proper printing position, the chase is turned back to firmly engage the pawl.

Co-acting with the pawl to hold the parts in a partially locked condition is an impeditive element, the spring 19, which, by engaging the rim of the wheel 7, resists the rotative movement of the wheel and prevents slight disalignment of the chase, due to jars or other causes tending to move it after it has once been placed in close contact with the pawl.

From a flat bar 20 secured to and running longitudinally of the frame, are a plurality of upwardly extending standards 21, arranged in pairs and all tied to the cross-bar 22. These standards serve principally as supports and guides for the actuating elements for the combined blank carrier and inking pad members 23.

In Figs. 2 and 9 the face views of the two blank carriers are shown, the one marked A being ordinarily used for printing the outside leaf of pass or coupon books, and the other, identified by the character B being employed where single blank cards or leaves are to be stamped.

The difference between these two blank carriers lies wholly in the depression 24, which latter, as reference to Figs. 4 and 5 will disclose, serves as a well within which the body of the coupon book 25 may be partially housed while the outer leaf or cover 26 is drawn across the face of the blank carrier into a position to receive the imprint.

These two views, Figs. 4 and 5, show, respectively, the carrier when inking the type and printing the blank; and the function of each of the elements used and their method of actuation in performing the two operations I will now describe.

Pivoted on the rearward side of the frame, at 27, is a treadle 28, and at a point near its operating end is a resilient element 29 which may be either a rubber pad or a spring. This element abuts on a fixed portion of the frame, as for instance the cross tie-bar 1′, and provides for a slight over-travel or movement upwardly of the treadle beyond the position which the resilient member normally holds it located. The necessity for this over-travel will shortly be apparent.

Also pivotally secured to the frame 1, at 30, is a swinging arm 31, making connection at its opposite end, on the pin 32, to the blank carrier connecting-rod 33.

The upper end of the member 33 is journalled on the pin 34 which is fixed in the blank carrier 23. A connecting-rod 35 extends from the treadle 28 to the arm 31, journalled, respectively, over pins 36 and 37 in these latter members. It will be understood that in this duplex printing machine there are four each of the elements 31 and 35, there

being one of the latter on each side of each treadle 28.

An expansible spring 38 is provided for each treadle and maintains the position of the latter, normally, as shown in Fig. 3,—the compression of the resilient member 29 being but slight at this time, but subject to a greater degree of compacting under certain operating conditions.

It is desirable although not absolutely essential that the distance between the two pins 36 and 37 be varied at times. For this purpose there is located on the connecting-rod 35 a turnbuckle 35′ having right and left hand threads which either increases or decreases the length of the rod, when rotated thereon.

Fixed on the table 1 is an angular bracket 39, in one leg of which is secured a pin 40. Connecting the two pins 34 and 40 are two links 41 and 42, one end of each of which is journalled on the pin 43. The link 42 is fixed on the pin 34 and oscillates on the pin 43 and the link 41 is fixed on the pin 43 and is swingingly connected to the pin 40. It will be observed, by reference to Figs. 1 and 3, that, when the treadle 28 is in its normal position—which is when the element 29 lightly abuts on the member 1′—the links 41 and 42 are disposed, relatively, in slight disalignment.

Referring to Figs. 3, 4 and 5, let it be assumed that an imprint is to be taken on the leaf or cover 26 of the pad 25. Fig. 3 delineates the parts at the start of the operation with respect to their relative positions on the printing machine.

By lowering the treadle 28 the blank carrier is drawn downwardly, rotating contra-clock-wise as it descends; and the links 41 and 42 which cause this rotative movement of the carrier will jack-knife toward the right, as seen in Fig. 4. This first down stroke of the treadle operates to bring the inking pad 44 into contact with the type 12 and at the same time the U shaped members 45, by making contact with the table top, compress the springs 46, the opposite sides of the members 45 now being extended beyond the face of the blank carrier, and in this way providing a space in which to insert the pad 25 into the depression 24 and extend the leaf 26 across the face of the blank carrier into position for printing. The springs 46 normally hold the members 45 extended on the inking pad side of the blank carrier.

After the operation of inserting the material on which the printing is to be done (the inking of the type having been accomplished in the meantime) the treadle is quickly released and the element 29 is impacted with enough force against the member 1′ to compress it sufficiently to allow the treadle to overtravel its normal up position, the blank carrier rising to a point at which the links 41 and 42 are in line (see Fig. 3ª) and itself slightly inclined from perpendicular. But in the upward, quick movement of the blank carrier it has acquired considerable rotative momentum and this will result in still further swinging the link 42 and carrying the pin 43 beyond the vertical dead center line through the pins 34 and 40. The links will now be disaligned, as seen in dot and dash lines, Fig. 3, and the resilient member 29 be returned to its former condition of being but slightly compressed. The treadle will also be lowered from its extreme high to its normal high position due to the toggling action of the links after the pin 43 has passed the dead center line.

Another downward movement of the treadle will bring the cover 26 into contact with the type and an impression thereof taken. It will be observed that in this last downward movement of the blank carrier the links jack-knife on the opposite side of the central vertical line from that on which they positioned themselves on the previous down stroke of the treadle.

On again releasing the treadle a duplication of the movements of the parts takes place, the links returning to their original, disaligned relation with each other, as seen in full lines in Fig. 3.

At this stage, the blank carrier is in up position with the pad and cover just printed firmly grasped by the members 45. To release the pad another down movement of the blank carrier must be made, but while in the down position the type is being inked and after removing the printed leaf another to be printed is inserted in the blank carrier—and similar sequence of movements continued until the work has been completed.

The blank carrier marked B operates in exactly the same manner as does the carrier A. With the exception of the depression 24 and a small independently operated holding clip 47, which is sometimes used on carrier A, the two blank carriers are identical in every particular.

As the type is subject to more or less clogging, due to the ink drying thereon and dust and dirt accumulation, I provide a simple wire brush cleaner comprising the bristle brush 48 yieldingly supported by the springs 49 and disposed on the machine in a position to rub across the type as they pass on the wheel 7 into printing position.

In re-arranging the chases or when changing the type set-up therein, it is convenient to have some place in which the chase may be held firmly while doing the work. I supply a table 50 which is hinged to the frame 1 and when in use it is raised to a horiontal position and held by the brace rods 51. Depressions 52, formed in the table serve to receive the chases and hold them securely while the type-changing operation is under way.

Reverting to a consideration of the functional characteristics of the rubber bands 8

and 9, the fact must be borne in mind at the start that the machine embodying my invention is a lightly built although well constructed piece of mechanism. To obtain machine accuracy in moving parts it is generally necessary to employ heavy construction for the different elements. This is the case, for instance, in the ordinary commercial printing machines in which the movement of the parts are minutely controlled so that absolute register and synchronism of the different elements are procurable. For the service to which my printing machine is to be put this super-accuracy is not required for the reason that I have anticipated this difficulty by providing means to eliminate the source of this trouble.

Were the chases rigidly attached to the rotary conveyor member it would be necessary to provide expensive apparatus to insure accurate alignment between the type and the material on which the printing is to be done. This is wholly done away with in my conception, as the contact of the paper with any portion or part of the type set-up will, when the proper pressure is applied, automatically bring the whole surface of the type into strong impingement with the paper, insuring a fully inked impression throughout.

Moreover, as these chases are quick-attachable and detachable devices, any slight inaccuracy in mounting them on the holding band will be taken care of by the flexibility of their supporting agent.

Furthermore, the element of cost must be considered in placing a machine of this type on the market, and with the construction as disclosed the machine will qualify on this point.

As I have hereinbefore stated, a single, thick rubber band might be substituted for the two bands 8 and 9; it might also be possible to incorporate a metal spring structure in lieu of the rubber material,—the object, in any event being to flexibly mount the type, so that, first, a fully inked impression is obtained over the whole copy, and second, that a uniform impression, strong enough to give a good imprint but not so potent as to blur the copy, if rubber was used for type purposes, by distortion of the type.

My printing machine is built exceptionally light so that it may be moved handily from place to place in an office; is nicely finished and extremely easy to operate, and will, it is believed, be found a valuable addition to the list of time-saving devices with which all modern offices are usually equipped.

Having thus described my invention, what I claim and desire to secure by Letters Patent is:

1. A printing machine comprising a frame, a table on said frame having an aperture therein, a wheel revolubly mounted in said frame, a band on said wheel disposed in spaced relation to the rim thereof, a plurality of type chases secured to said band, an element interjacent said band and the rim of said wheel whereby said band may be yieldingly supported on and with respect to said wheel, and means whereby said chases may, individually and successively, be brought into printing position at the surface of said table.

2. A printing machine comprising a frame, a table on said frame, a wheel revolubly mounted on said frame, a metallic band on said wheel disposed in spaced relation to the rim thereof, a rubber band interposed between the said metallic band and the rim of said wheel, a plurality of type chases detachably secured on and around the periphery of said metallic band, and means to rotate said wheel.

3. A printing machine comprising a frame, a table having an aperture therein mounted on said frame, a wheel revolubly mounted in said frame, a rubber band secured to the rim of said wheel, a metallic band secured to and exteriorly of said rubber band, a plurality of type chases arranged around the periphery of said metallic band, quick attaching clamping means secured to said chases and adapted to be sprung on to the edges of said metallic band, means to rotate said wheel, and means to positively prevent retrograde rotary movement of said wheel.

4. A printing machine comprising a frame, a table having an aperture therein mounted on said frame, a wheel revolubly mounted in said frame, a band disposed in spaced relation to the periphery of said wheel, yielding means between said band and said wheel whereby said band may be brought into closer relation to said wheel, a plurality of type chases detachably mounted on said band, a pawl, means to bring, successively, the rearward ends of each of said chases into engagement with said pawl whereby rotary retrograde movement thereof may be prevented, and yielding means adapted to engage said wheel and frictionally hold the same against rotation.

5. A printing machine comprising a frame, a table having an aperture therein mounted on said frame, a wheel revoluble in said frame, a flexibly mounted band on said wheel, means applied to said wheel yieldingly resisting rotary movement thereof, a plurality of type chases detachably secured to said band, a plurality of standards extending upwardly from said table, a blank carrier reciprocably mounted between said standards, means to reciprocate said blank carrier, and means to rotate said wheel independently of the actuation of said blank carrier.

6. A printing machine comprising a frame, a table on said frame, standards projecting above said table, a blank carrier disposed be-

tween said standards, means to vertically reciprocate said blank carrier, and means coacting with said reciprocatory means to impart a rotary movement to said blank carrier.

7. A printing machine comprising a frame, an apertured table on said frame, a wheel revolubly mounted in said frame, a plurality of type-holding chases yieldingly mounted on said wheel, a plurality of standards on said table, a blank carrier reciprocably mounted between said standards, means to reciprocate said blank carrier, means to rotate said blank carrier simultaneously with the reciprocation thereof, and a yielding element adapted to force said blank carrier downwardly a spaced distance from its extreme upward position to its normal upward position between said standards, said return movement occurring at the end of each upward reciprocation of said blank carrier.

8. A printing machine comprising a frame, a table having an aperture therein mounted on said frame, a blank carrier adaptable of vertical reciprocation above said table, means to reciprocate said blank carrier, means to rotate said blank carrier simultaneously with the reciprocation thereof, means to reverse the direction of rotation of said blank carrier on each alternate reciprocation, a plurality of resiliently mounted type-holding chases, rotary conveying means adapted to bring, singly, any one of said type-holding chases into printing position at the surface of said table, means to lock said rotary conveying means against retrograde rotary movement in said frame, and means yieldingly applied adapted to frictionally resist rotary movement of said rotary conveying means in either direction.

9. A printing machine comprising a frame, a table having an aperture therein mounted on said frame, a revoluble wheel, a plurality of resiliently mounted type-holding chases on said wheel, means to bring, singly, any one of said type-holding chases into printing position within the aperture of said table, means to lock said wheel against rotary retrograde movement, a blank carrier reciprocably mounted on said table, an inking pad extending out of one side of said blank carrier, blank-clamping means at each end of said blank carrier, and means whereby said blank-clamping means is automatically released when said blank carrier reaches its lowermost position on said table and said inking pad is downwardly disposed on said blank carrier.

10. A printing machine comprising a frame, a table having an aperture therein mounted on said frame, a revoluble wheel, a plurality of resiliently mounted type-holding chases on said wheel, a plurality of standards on said table, a blank carrier reciprocably mounted between said standards, an inking pad on one side of said blank carrier, a well on one end of said blank carrier adapted to receive the body of a pad to be imprinted, blank-clamping means on each end of said blank carrier, one of said clamping elements embracing said well and adapted to impinge on the body portion of the pad placed therein, springs yieldingly holding the said clamping elements in retracted position on the blank carrying side of said blank carrier, and means whereby said blank-clamping means is released upon the blank carrier reaching its lowermost position and the inking pad is downwardly disposed.

11. A printing machine comprising a frame, a table having an aperture therein mounted on said frame, a wheel revolubly mounted in said frame, a circumferential band yieldingly mounted on said wheel, a plurality of type-holding chases detachably secured to said band, means to rotate said wheel, a plurality of standards rising from said table, a blank carrier disposed normally in a vertical position between said standards, a treadle, connecting means between said treadle and said blank carrier whereby the latter may be reciprocated, a compressible element on the top side of said treadle, a helical spring adapted to exert an upward strain on said treadle whereby in the normal, upward position of the latter the said compressible element will abut on a fixed portion of said frame and be compressed but a portion only of its possible compressibility, a pair of connected links on each side of said blank carrier, the lower end of one link in each pair being pivotally secured to said table and the upper end of the other link being fixedly secured to the said blank carrier, and means to locate said blank carrier in its normal, upward position so that the links in each of said pairs of links may be disposed in relative disalignment.

In testimony whereof I affix my signature.

FRANK L. RAWSON.