United States Patent [19]

Kurimoto et al.

[11] **3,774,139**

[45] **Nov. 20, 1973**

[54] **WIRE-TYPE SLIDE RESISTOR FOR A SELF-BALANCING INSTRUMENT HAVING CONTACT POSITION REGULATING MEANS**

[75] Inventors: **Kozo Kurimoto; Hiroshi Umetsu; Takeo Shoji,** all of Katsuta; **Yukio Yoshinari,** Naka, all of Japan

[73] Assignee: **Hitachi, Ltd.,** Tokyo, Japan

[22] Filed: **Nov. 11, 1971**

[21] Appl. No.: **197,875**

[30] **Foreign Application Priority Data**

Dec. 16, 1970 Japan 45/111747

[52] **U.S. Cl.** **338/74,** 338/125, 338/150, 338/176

[51] **Int. Cl.** **H01c 5/02**

[58] **Field of Search** 338/67, 98, 114, 338/118, 125, 126, 150, 160, 176, 180, 197, 210, 295, 315–320, 128, 133, 68, 74, 79, 169

[56] **References Cited**

UNITED STATES PATENTS

2,357,433	9/1944	Side	338/126 X
2,055,766	9/1936	Hunt	338/197 X
2,234,155	3/1941	Bliss	338/150

FOREIGN PATENTS OR APPLICATIONS

364,647	11/1938	Italy	338/79

Primary Examiner—Robert K. Schaefer
Assistant Examiner—Gerald P. Tolin
Attorney—Craig, Antonelli & Hill

[57] **ABSTRACT**

A slide resistor for a self-balancing instrument including two retainers provided within a frame of the self-balancing instrument, each retainer being provided with two notches. Two wire resistors are stretched between the two retainers, one end of each wire resistor being fastened to one of the two retainers by a conductive terminal engaged to a respective notch, and the other end being fastened to the other retainer through a conductive spring by a conductive terminal engaged to the notch of the other retainer. A slide contact is secured to a movable body and is adapted to slide on the wire resistors, and a roller is provided on the movable body adjacent the slide contact, the roller being provided with two V-shaped grooves to guide the two wire resistors, respectively.

12 Claims, 5 Drawing Figures

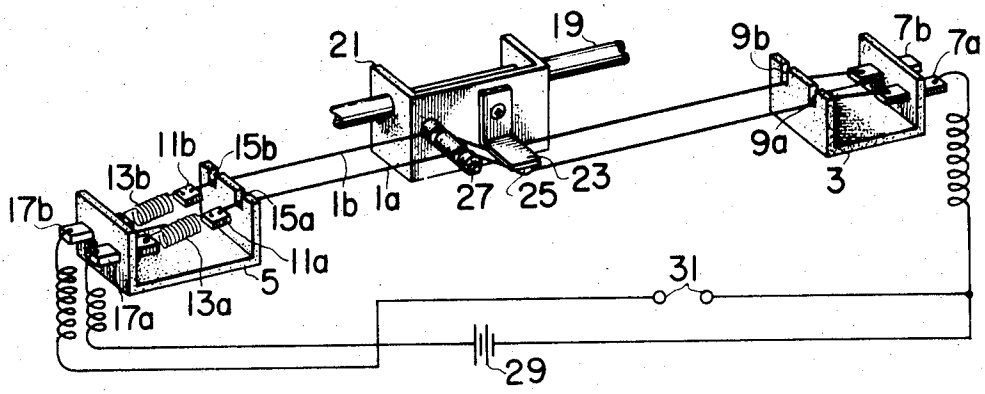

FIG. 1

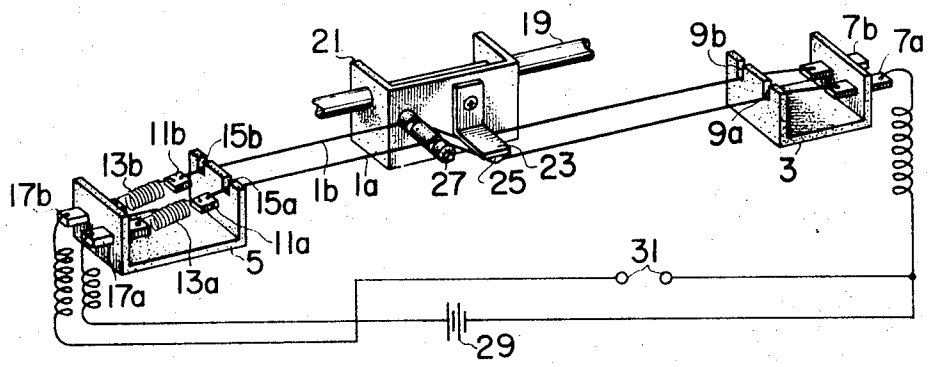

FIG. 2

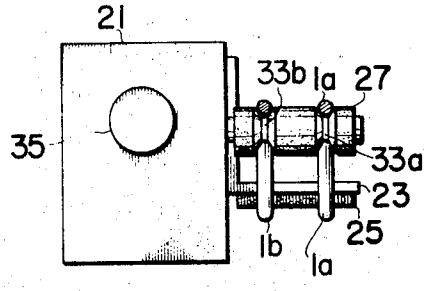

FIG. 3

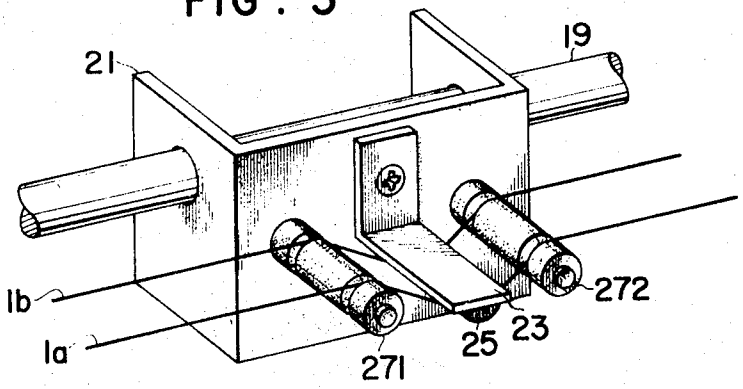

FIG. 4

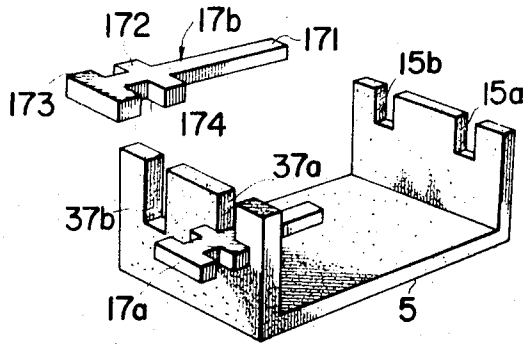

FIG. 5

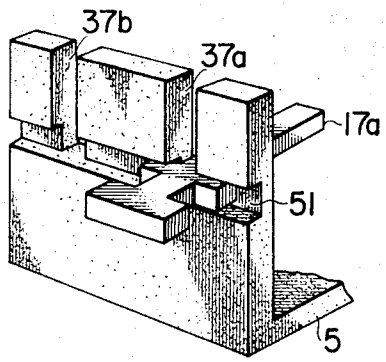

WIRE-TYPE SLIDE RESISTOR FOR A SELF-BALANCING INSTRUMENT HAVING CONTACT POSITION REGULATING MEANS

BACKGROUND OF THE INVENTION

This invention relates to slide resistor for self-balancing instruments. The invention is described herein in connection with self-balancing recorders.

As is well known in the art, in the conventional self-balancing recorder, a recording pen is moved in proportion to the signal input to record the input value on a recording sheet. It is provided with slide resistor means for converting the position of the recording pen into a corresponding electric signal.

The slide resistor means of this kind is usually provided in the form of a coil resistor type device consisting of a coil resistor wound on a thick core wire. In the coil resistor type slide resistor means, however, a slide tap slides along a surface of the coil turns of the resistor. Therefore, for the recording of a continuously changing input the resolution power of the recorder is unsatisfactory since the recording pen is moved from one coil turn to the next providing a change in resistance which is stepwise. Also, since the coil resistor itself is comparatively large in size, the recorder also tends to have a large size, which conflicts with the demand for size reduction in such devices. Further, with recent increase in the response speed of the recording pen of the recorder, the slide tap is liable to stride several turns of the coil resistor. Furthermore, as the slide tap wears, contact failure will result due to insufficient contact pressure.

In order to eliminate the above drawback, it has presently been proposed to use two wire resistors (one wire resistor being used as a lead wire) stretched parallel to each other and a U-shaped plate spring provided with contacts on the inner side of the opposite legs, said plate spring being secured to a recording pen holder and clamping the two wire resistors so that the contacts are in frictional engagement with the wire resistors, said wire resistors being stretched between two cylindrical guides secured to the recording pen holder on opposite sides of the plate spring and having a diameter slightly greater than the distance between the contacts. With this construction, the contact pressure between the contact and the wire resistor can always be maintained constant.

With this construction, however, the contact touches the wire resistor at various positions with the movement of the recording pen holder, resulting in contact failure. This is because the contact and the wire resistor are both made of metal so that grooves are formed in the contact due to the sliding movement of the contact along the wire resistor. Also, the cylindrical guides are usually made of an insulating material, such as acetal-homopolymer and glass, which produces a powder discharge with wear, and as a result of contact with the wire resistors, the powder attaches to the wire resistors to cause contact failure, resulting in fluctuations of the recording output, that is, fluctuations in the indication of the indicating means. Thus, a smooth recording cannot be ensured.

Further, with the cylindrical guides made of acetal-homopolymer, sufficient contact pressure between the contact and the wire resistor cannot be obtained due to the unavoidable wear of the cylindrical guides. In the case where glass guides are used, the wire resistors are

soon broken, so that the service life of the wire resistors, that is, the number of reciprocations of the recording pen holder, is very short. Furthermore, since the contacts are secured to the plate spring wiper, tedious adjustment of the plate spring is necessary during manufacture.

SUMMARY OF THE INVENTION

The invention has an object of providing a slide resistor device for self-balancing instruments, which is simple in construction and which makes it possible to maintain excellent contact between the contact and the wire resistors.

Another object of the invention is to provide a slide resistor for self-balancing instruments in which the replacement of the wire resistor may be readily accomplished.

A further object of the invention is to provide a slide resistor for self-balancing instruments which can be inexpensively and simply manufactured.

A still further object of the invention is to provide a slide resistor for self-balancing instruments in which the service life of the wire resistor is very long.

According to the invention, satisfactory sliding contact between at least one wire resistor and a slide contact secured to a movable part of the self-balancing recorder can always be maintained by a simple regulating means regulating the positions of contact between the wire resistor and the slide contact.

Also, according to the invention, the regulating means consists of a roller provided with guide grooves to guide the wire resistor and lightly touching them while it rotates, so that no discharge of powder resulting from wear is produced, thereby to ensure excellent contact between the wire resistor and the slide contact, as well as extending the service life of the wire resistors.

Further, according to the invention, it is possible to replace the wire resistor without removing the retainers, adjust the tension of the wire resistors and facilitate the assembling of the instrument and replacement of the wire resistor.

BRIEF DESCRIPTION OF THE DRAWINGS

FIG. 1 is a schematic diagram of a slide resistor according to an embodiment of the invention;

FIG. 2 is a cross-sectional view of a recording pen holder used in the embodiment of FIG. 1;

FIG. 3 is a partial view in perspective of another embodiment of the invention;

FIG. 4 is a detail view of an improved construction of the retainer used in the above embodiments; and

FIG. 5 is a detail view of a further improved construction of the retainer.

DETAILED DESCRIPTION OF THE PREFERRED EMBODIMENT

Referring to FIG. 1, wire resistors **1***a* and **1***b* are made of thin manganin wires, for instance, which are stretched horizontally and parallel to each other between two non-conductive retainers **3** and **5**. One end of each wire resistor is fixed at a conductive terminal **7***a* or **7***b* attached on a vertical wall of the retainer **3**. The other vertical wall of the retainer **3** has two slits **9***a* and **9***b* through which the wire resistors **1***a* and **1***b* are stretched. In the retainer **5**, the other end of each wire resistor is connected to a conductive relay terminal **11***a* or **11***b* through a slit **15***a* or **15***b*. The terminals **11***a* and

11*b* do not contact the retainer **5**, but are supported by the tension of the conductive springs **13***a* and **13***b* to which they are respectively connected. The springs **13***a* and **13***b* are further connected to conductive terminals **17***a* and **17***b*, respectively, which are fastened to the retainer **5**, so that the springs **13***a* and **13***b* apply a desirable tension to the wire resistors **1***a* and **1***b*.

A rider shaft **19** is provided along which a recording pen holder **21** is moved. The recording pen holder **21** is molded from a plastic material and has an L-shaped attachment member **23** secured by a bolt to the holder. To the member **23** is welded a contact **25** made of a Au-Pd material, for instance, which contact is in frictional engagement with the wire resistors **1***a* and **1***b*. The holder **21** further has a guide roller **27** formed with two guide grooves for guiding the wire resistors **1***a* and **1***b*. The contact **25** and the roller **27** are disposed relative to each other so as to provide a predetermined contact pressure between the contact **25** and the wire resistors **1***a* and **1***b*.

In the case of FIG. **1**, the roller **27** is placed at a higher position than the surface of the contact **25**; therefore, the wire resistors **1***a* and **1***b* are stretched through the upper side of the roller **27** and the lower side of the contact **25**. These conditions are obvious from FIG. **2**, which shows a cross-sectional view of the holder **21**. As is apparent from this figure, the grooves **33***a* and **33***b* formed on the roller **27** are V-shaped and the position of the roller **27** is higher than the surface of the contact **25**. As a modification, the relationship of the relative positions of the two may be inverted, in which case the surface of the contact **25** must be turned up and the wire resistors **1***a* and **1***b* stretched through the lower side of the roller **27** and the upper side of the contact **25**.

In the above-mentioned structure, a direct current electric source **29** is connected between the terminals **7***a* and **17***a*, so that an output according to the position of the holder **21** appears across output terminals **31**.

The operation of the device described above is as follows. As the holder **21** moves along the rider shaft **19** in response to the changing input, the contact **25** is moved to positions proportional to the value of the input while being maintained in contact with the wire resistors **1***a* and **1***b*. The roller **27** moving with the holder **21** is rotated by the frictional resistance between it and the wire resistors **1***a* and **1***b* so that the wire resistors **1***a* and **1***b* may touch the contact **25** at its predetermined positions.

Since the points of contact between the wire resistors **1***a* and **1***b* and the contact **25** are maintained at constant spacing by the roller **27**, which is not in sliding contact with the wire resistors, but only lightly touches the wire resistors while it rotates, no powder created by wear is produced, so that there is no possibility of causing contact failure. Thus, the excellent contact between the wire resistors **1***a* and **1***b* and the contact **25** may be maintained.

Experiments reveal that according to the invention no contact failure results even after the recording pen holder has been reciprocated a million times, while with the usual slide resistor means using a single wire resistor, contact failure resulted after about 200,000 reciprocations of the recording pen holder.

Also, since the roller **27** is not in sliding contact with the wire resistors, but only lightly touches them while it rotates, the service life of the wire resistors **1***a* and **1***b* may be greatly extended. Further, since the wire resistors **1***a* and **1***b* are guided in respective V-shaped grooves **33***a* and **33***b* formed in the roller **27**, sufficient contact pressure between the wire resistors **1***a* and **1***b* and the contact **25** may be obtained. Furthermore, since the contact **25** is secured to the steel attachment member **23**, no wipe adjustment is necessary, thus facilitating the manufacture of the arrangement.

FIG. **3** shows another embodiment, in which two guide rollers **271** and **272** are provided on respective sides of the contact **25** rotatably mounted on the holder **21**. Other parts of the arrangement have the same structure as shown in FIG. **1**. The wire resistors **1***a* and **1***b* are stretched along a V-shaped path through the upper side of the roller **271**, the lower surface of the contact **25** and the upper side of the roller **272**. In this way, a predetermined contact pressure may always be obtained even if the wire resistors **1***a* and **1***b* become slightly loose.

In the preceding embodiments illustrated in FIGS. **1** and **3**, the wire resistors **1***a* and **1***b* are stretched between the retainers **3** and **5** through the terminals provided at their opposite ends. With this construction, the assembling of the slide resistor arrangement including the wire resistors **1***a* and **1***b* into the self-balancing instrument frame is very troublesome, since they must be installed together with the retainers **3** and **5**. Also, when replacing the wire resistors **1***a* and **1***b* the retainers **3** and **5**, which are secured to the frame body, should also be replaced, so that the replacement is very troublesome and is not economical. Further, the wire resistors **1***a* and **1***b* should be cut to a predetermined length, but it is desirable to be able to adjust the wire length to provide a predetermined contact pressure, since the tension of the wire resistors **1***a* and **1***b* varies depending upon the length.

FIG. **4** shows a further improved retainer **5**, which is intended to solve the above problems. The retainer **3** also has the same construction as retainer **5**. In this embodiment, the retainer **5** is formed with notches **37***a* and **37***b*. Strip-like terminals **17***a* and **17***b* provided with stepped portions **172** and **173** are received in the respective notches **37***a* and **37***b* and are retained therein by the shoulders of the stepped portions **172** or **173**. With this construction, the wire resistors **1***a* and **1***b* may be removably attached to the retainers **3** and **5**, so that the assembling of the instrument and the replacement of the wire resistors **1***a* and **1***b* may be readily accomplished. Also, the retainers **3** and **5** need not be replaced when replacing the wire resistors **1***a* and **1***b*, which is very economical. Further, by changing the shoulders in each of the stepped portions **172** and **173** of the terminals **17***a* and **17***b* which engage the notches **37***a* and **37***b*, the tension of the wire resistors **1***a* and **1***b* may be adjusted. Furthermore, as shown in FIG. **5**, in order to insure holding the terminals **17***a* and **17***b* in the notches **37***a* and **37***b*, a groove **51** may be horizontally provided in an outer side of the vertical wall of the retainer **5** so as to engage the notches **172** and **173** therein.

Having thus described the present invention, it is obvious that various modifications within the knowledge of workers in the art may be utilized without departing therefrom.

It is to be understood also that although the invention has been described with specific reference to some particular embodiments thereof, it is not to be so limited,

since changes and alterations therein may be made which are within the full intended scope of this invention as defined by the appended claims.

What is claimed is:

1. A slide resistor arrangement for self-balancing instrument comprising at least one wire resistor stretched under a predetermined tension, a rigid non-resilient slide contact secured to a movable body positioned to slide with said contact in engagement with said wire resistor, and contact position regulating means secured to said movable body for regulating said wire resistor maintaining the contact position between said slide contact and said wire resistor at predetermined positions of said slide contact by controlling the tension in said wire resistor thereby maintaining the wire resistor in contact with said slide contact.

2. A slide resistor arrangement according to claim **1** wherein said contact position regulating means comprises at least one roller provided on said movable body adjacent said slide contact, said roller being provided with a groove guiding said wire resistor.

3. A slide resistor arrangement according to claim **2** wherein said contact position regulating means comprises two rollers provided on respective sides of said slide contact so that said wire resistor is stretched in a V-shaped form in the area of said slide contact.

4. A slide resistor arrangement for a self-balancing instrument comprising two retainers provided within a frame of the self-balancing instrument, each retainer being provided with at least one notch, at least one wire resistor stretched between said two retainers, one end of the wire resistor being fastened to one of said two retainers by a conductive terminal engaging in the notch therein and the other end being fastened to the other retainer through a conductive spring by a conductive terminal engaging in the notch of that retainer, a slide contact secured to a movable body positioned to slide with said contact in engagement with said wire resistor, and contact position regulating means secured to said movable body for regulating said wire resistor to maintain the contact position between said slide contact and said wire resistor at predermined positions of said slide contact.

5. A slide resistor arrangement according to claim **4** wherein each terminal at the ends of said wire resistor has a plurality of stepped portions engaging in respective notches of said retainers.

6. A slide resistor arrangement according to claim **5** wherein each retainer has a groove engaging said stepped portions of the terminal.

7. A slide resistor arrangement according to claim **4** wherein said contact position regulating means comprises at least one roller provided on said movable body adjacent said slide contact, said roller being provided with a groove guiding said wire resistor.

8. A slide resistor arrangement according to claim **4** wherein said contact position regulating means comprises two rollers, secured to said movable body on respective sides of said slide contact, so that said wire resistor is stretched in a V-shaped form in the area of said slide contact.

9. a slide resistor arrangemnt according to claim **4** including at least two wire resistors in contact with said slide contact stretched between said two retainers, each wire resistor being fastened to said retainers by a conductive terminal and a conductive spring connected to the respective ends thereof.

10. In a slide resistor arrangement for a self-balancing instrument having at least one substantially straight uni-directional wire resistor stretched under a predetermined tension, and a rigid non-resilient slide contact secured to a movable body positioned to slide with said contact in engagement with said wire resistor, the improvement comprising: wire resistor contact regulating means secured to said movable body for positioning the wire resistor and maintaining said slide contact on said movable body in engagement with said wire resistor at predetermined positions along said wire resistor.

11. A slide resistor arrangement according to claim **10,** wherein said wire resistor contact regulating means comprises at least one roller provided on said movable body adjacent to said slide contact, said roller being provided with a groove for guiding said wire resistor.

12. A slide resistor arrangement according to claim **11,** wherein said wire resistor contact regulating means comprises two rollers provided on respective sides of said slide contact so that said wire resistor is stretched in a V-shaped form in the area of said slide contact.

* * * * *