(No Model.) 2 Sheets—Sheet 1.

M. & V. MARTIN.

LEATHER DRESSING MACHINE.

No. 456,421. Patented July 21, 1891.

Fig. 1.

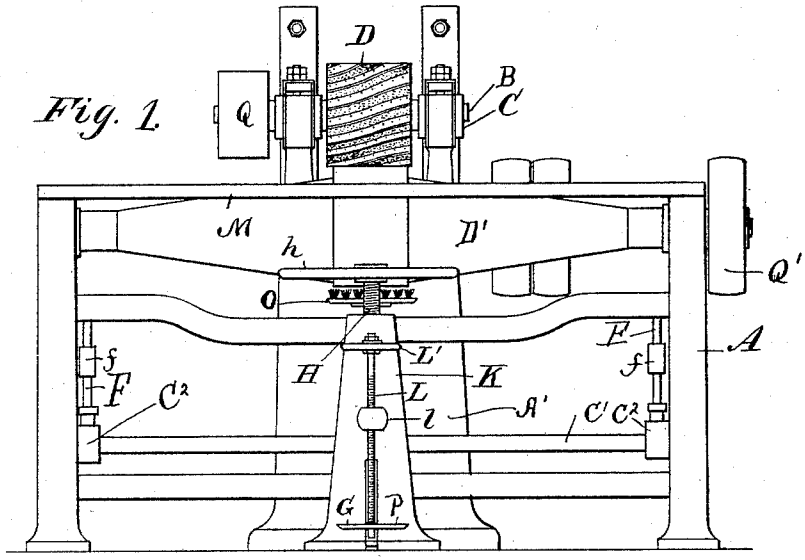

WITNESSES:
J. Henry Sheberath
C. Sedgwick

INVENTOR:
M. Martin
V. Martin
BY Munn & Co
ATTORNEYS

THE NORRIS PETERS CO., PHOTO-LITHO., WASHINGTON, D. C.

(No Model.) 2 Sheets—Sheet 2.

M. & V. MARTIN.

LEATHER DRESSING MACHINE.

No. 456,421. Patented July 21, 1891.

FIG. 2.

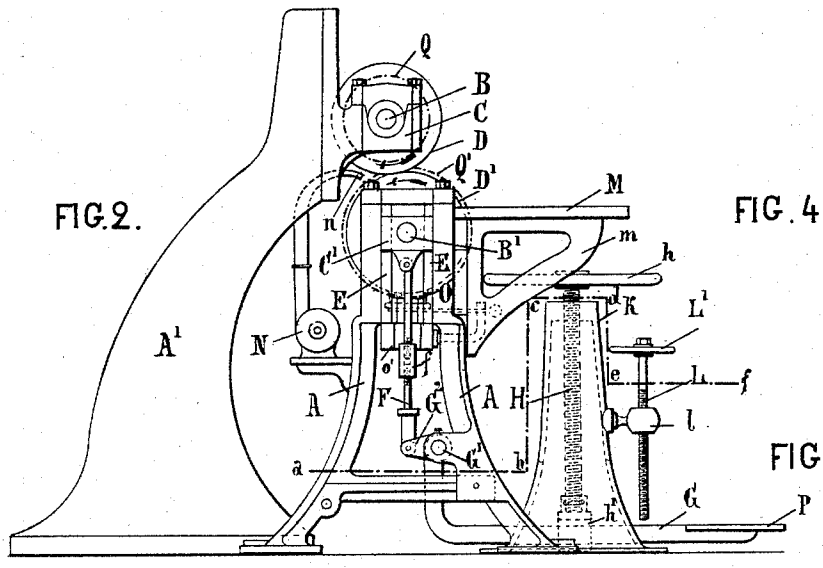

FIG. 4.

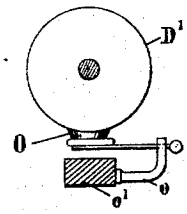

FIG 5

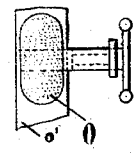

FIG. 3.

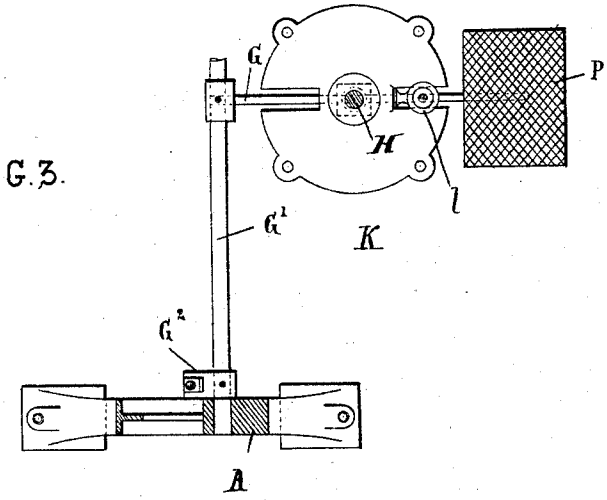

Witnesses:
C. Sedgwick
Edgar Tate

Inventor:
M. Martin
V. Martin
By Munn & Co
Attorneys.

THE NORRIS PETERS CO., PHOTO-LITHO., WASHINGTON, D. C.

UNITED STATES PATENT OFFICE.

MARIUS MARTIN AND VICTOR MARTIN, OF PARIS, FRANCE.

LEATHER-DRESSING MACHINE.

SPECIFICATION forming part of Letters Patent No. 456,421, dated July 21, 1891.

Application filed October 15, 1890. Serial No. 368,184. (No model.) Patented in France February 12, 1889, No. 195,960.

To all whom it may concern:

Be it known that we, MARIUS MARTIN and VICTOR MARTIN, (brothers,) of 29 Rue St. Ambroise, Paris, Department of Seine, in the Republic of France, have invented certain new and useful Improvements in Machines for Preparing Dried and Wetted Skins, (for which we have obtained Letters Patent in France, No. 195,960, dated February 12, 1889;) and we do hereby declare that the following is a full, clear, and exact description of the invention, which will enable others skilled in the art to which it appertains to make and use the same.

Our invention relates to improvements in machines for preparing dried and wetted skins, for which we have obtained Letters Patent in France, dated February 12, 1889, No. 195,960; and the object of our invention is to produce an efficient machine for preparing skins in all stages of dyeing, coloring, and dressing, whether in a wet or dry state, and for performing the different processes of skiving, bleaching, scraping, ventilating, smoothing, glazing, and other subsidiary operations.

To this end our invention consists in certain features of construction and combinations of parts, which will be hereinafter described and claimed.

Reference is to be had to the accompanying drawings, forming a part of this specification, in which similar letters of reference indicate corresponding parts in all the views.

Figure 1 is a front elevation of the machine. Fig. 2 is a side elevation of the same. Fig. 3 is a partial horizontal section on the lines *a b c d e f* in Fig. 2, and Figs. 4 and 5 are detail views showing the application of the brush to the lower cylinder.

A′ is a frame with a swan's neck, which carries the upper cylinder D, mounted on the shaft B, the latter turning in the bearings C, and this upper cylinder is prepared by having its face roughened, and, as shown in the drawings, the bearing-face is provided with projecting helicoidal plates, between which are interposed layers of brushes. On the shaft B is a pulley Q, which serves to drive the shaft and which is driven by a suitable belt.

A is a second frame, which carries the cylinder, the table, and all the rest of the machine. A shaft B′ is mounted in the frame A, beneath the shaft B, and this shaft B′ is provided with a cylinder D′, which has a smooth face, and which aligns with the cylinder D, the shaft B′ being driven by a pulley Q′. The shaft B′ is mounted in bearings C, which move in slideways E, formed in the uprights of the frame A, and the bearings are capable of a vertical movement therein, thus moving the lower cylinder nearer to or farther from the upper cylinder, as desired. The up-and-down movement is communicated to the bearings C′ by the screw-rods F′, which extend downward from the lower portions of the bearings, and the said rods are made in two parts, which are united by a turn-buckle *f*, so that the rods may be easily adjusted. The lower ends of the said rods F′ are connected with levers G^2, keyed to the rear end of a cross-lever G′, which is fixed on a lever G, extending longitudinally beneath the frame and terminating in a pedal P. It will thus be seen that by stepping upon the pedal the cylinder D′ may be raised.

M is a table upon which the skin to be operated on is spread. It is supported by the brackets *m*, which connect it with the frame A. On the back of the frame A is a blower N, which has a jet *n*, delivering between the upper and lower cylinders, and this jet will thus deliver air upon the skin which is being treated and prevent the skin from cleaving to the upper cylinder. Beneath the lower cylinder is a brush O, which is mounted on an arm *o*, fixed on the cross-piece *o′* of the frame A, and the object of this brush is to keep the lower cylinder on which it rests clean at all times.

A screw H is mounted vertically on a support K, which is provided with a threaded collar to receive the screw, and the screw is provided at its upper end with a fly-wheel *h*, which may be turned by hand and which will impart its motion to the screw. The screw H carries at its lower end a saddle *h′*, which embraces the lever G, and the lever has more or less play in the saddle. The object of this arrangement is to limit the displacement of the pedal P and consequently that of the lower cylinder and to provide means for the rapid adjustment of the latter. A screw-rod L is arranged in front of the screw H, being mounted in a support *l*, which is threaded to

correspond with the thread of the screw-rod and which is secured to the support K. The screw-rod L has a hand-lever L′ at the top, by means of which it may be turned, and the lower end of this screw-rod is arranged in the path of the lever G, and when the lever is depressed to bring the lower cylinder D′ into a desired position the rod may be turned down, so as to impinge upon the lever and hold it and the lower cylinder in place.

To operate the machine the cylinders are set in motion by means of their driving-belts, the lower cylinder is forced up by the lever, so as to nearly touch the upper cylinder, and the skins are fed flesh side up between the cylinders. The finished surface of the upper cylinder will thus be brought to bear upon the skins and they will be prepared according to the nature of the surface of the upper cylinder.

Having thus fully described our invention, we claim as new and desire to secure by Letters Patent—

A machine of the character described, comprising a lower and upper cylinder mounted, respectively, in fixed and vertically-movable bearings, a main lever extending beneath the machine and having connection with the upper cylinder, a screw secured to the main lever and mounted in the frame of the machine, and another screw mounted above the main lever to limit its movement, substantially as shown and described.

In testimony that we claim the foregoing as our own we have hereunto affixed our signatures in presence of two witnesses.

MARIUS MARTIN.
VICTOR MARTIN.

Witnesses:
T. BECKER,
J. L. RATHBONE.