J. A. GILES.

WRENCH.

APPLICATION FILED SEPT. 18, 1914.

**1,153,303.** Patented Sept. 14, 1915.

Fig. 1.

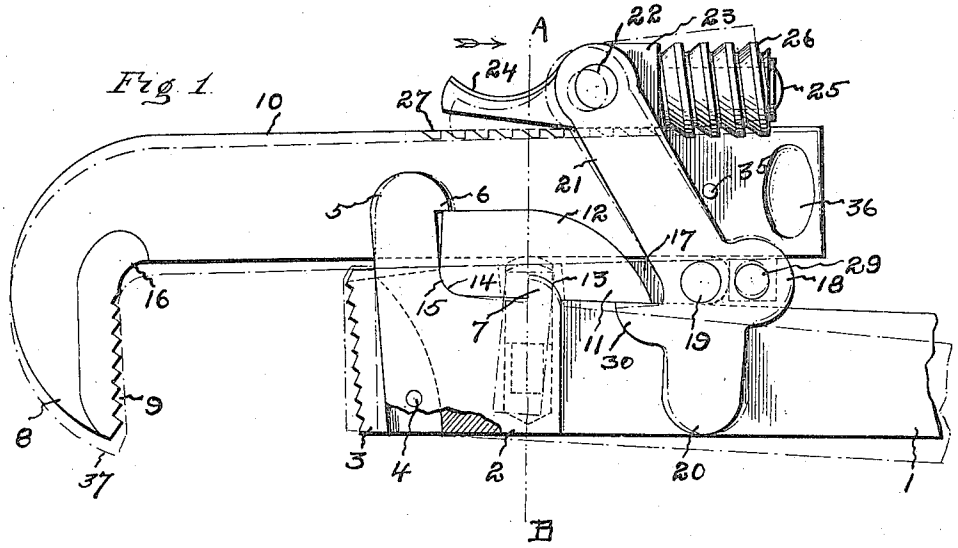


Fig. 2.

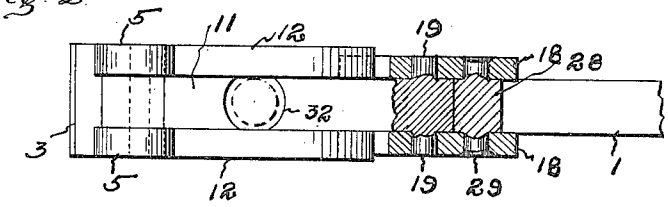


Fig. 3.

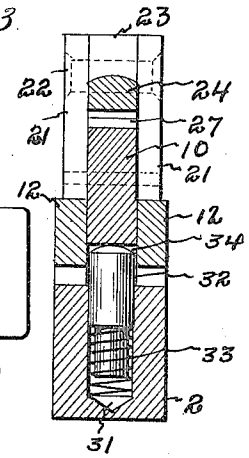


Fig. 4.

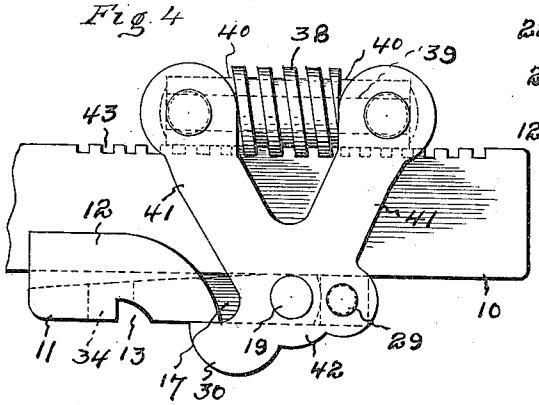


Witnesses

Florence H. Monk

Wallace S. Moyle

Inventor

Julian A. Giles

By Atty

George E. Hoag

COLUMBIA PLANOGRAPH CO., WASHINGTON, D. C.

# UNITED STATES PATENT OFFICE.

JULIAN A. GILES, OF DERBY, CONNECTICUT.

## WRENCH.

1,153,303. Specification of Letters Patent. Patented Sept. 14, 1915.

Application filed September 18, 1914. Serial No. 862,306.

*To all whom it may concern:*

Be it known that I, JULIAN A. GILES, a citizen of the United States, residing at Derby, in the county of New Haven and State of Connecticut, have invented certain new and useful Improvements in Wrenches, of which the following is a specification, reference being had therein to the accompanying drawings.

My invention relates to a new and improved wrench, referring more particularly to the type of wrench generally known in the trade as a pipe wrench.

It is the object of this invention, among other things, to construct the wrench of few parts, so designed that the sides thereof are flat and smooth, without projecting parts; the jaws mounted so as to act quickly, and capable of a very fine and accurate adjustment; as well as to produce a tool that will have great strength, with the minimum amount of mechanism and weight.

To these, and other ends, my invention consists in the wrench, having certain details of construction and combinations of parts, as will be hereinafter described and more particularly pointed out in the claims.

Referring to the drawings, in which like numerals of reference designate like parts in the several figures, Figure 1 is a side elevation of my improved wrench, with a portion of the handle broken away; Fig. 2 is a plan view of the jaw and of the handle, with some of the parts adjacent thereto in section; Fig. 3 is a sectional view, taken upon line A—B of Fig. 1; and Fig. 4 is a side elevation of a modified form of my invention.

My improved wrench is constructed with a handle 1, having a head portion 2 of slightly greater width than the shank of said handle and within which the toothed jaw plate 3 is secured by the pintle 4.

Projecting from one side of the head portion 2 are the ears 5 having the overhanging lips 6 thereon, and the locking lugs 7 lying substantially parallel with said ears.

The movable jaw 16 constructed with a head portion 8, having teeth 9 therein, and a shank portion 10, of substantially the same width as the open space between the ears 5, is slidably mounted in the cradle 11 between the ears 12. The forward end of this cradle is rounded at 14, where it engages the rounded corner 15 of the head 2, both combining to form a fulcrum point. In the underside of the cradle is a notch 13, of substantially the same shape as the lugs 7, and the shank portion 17 thereon of substantially the same width as the shank 10 of the movable jaw, extends rearwardly therefrom, with a stud 19 upon either side thereof, upon which the side plates 18 are pivotally mounted. The side plates 18 are constructed with wings 20, which project upon either side of the handle 1, arm portions 21 that project across either side of the shank 10 of the movable jaw, and lifter arms 30 that project under the cradle 11. The side plates are connected at one end by the pintle 22, upon which swings a block 23, having a finger lever 24 at one end and a stud 25 at the other end, upon which the worm 26 is rotatably mounted and engages the teeth 27 in the shank 10. The side plates 18 are connected at the other end by a stop block 28 having the riveted stud 29, therein.

Within a socket 31 in the head 2, is a plug 32 that is normally moved in one direction by the spring 33, and the upper end of which passes through an opening 34 in the cradle 11 and bears against the inside face of the shank 10, thus normally pressing said movable jaw away from the handle 1.

After all of the parts have been assembled, a pin 35 is passed through the shank 10 and projects upon either side thereof so as to engage the edge of the arm portions 21 of the side plates 18, and thereby limit the movement of said shank in one direction. At the tail end of said shank member is a depression 36 upon both sides thereof, into which the fingers project to facilitate the manual movement of the movable jaw.

In operation the jaw 16 is slidable in the cradle 11 between the ears 12, the arm portions 21 of the side plates 18 and the ears 5. When the jaw 16 is actuated so that the head portion 8 thereon is approaching the head portion 2, the worm 26 is thrown out of engagement with the teeth 27 by reason of the angular face upon one side thereof, but when moved in the opposite direction the worm must be lifted out of its engagement with the teeth. This is accomplished by pressure upon the finger lever 24, the block 23, upon which the worm 26 is rotatably mounted, then moving upon the pintle 22.

The movable jaw may be shifted in either direction manually by the fingers which pro-

ject into the recesses 36 and in one direction by pressure upon the outer end of the head portion 8.

In Fig. 1 I have shown the position of the handle 1 when not in use by full lines and the jaw 16 by broken lines, designated 37. The jaw 16 in the full lines, and the handle in dotted lines, indicate their relative positions when the teeth upon the jaw plate 3 and the teeth 9 upon the jaw head 8 have engaged a presented surface. The movement of the handle 1 from the first above described position first causes the movable jaw 16 to rock upon the pivot 19, thus causing the teeth to secure a bite or grip. Thereafter, while pressure is exerted upon the handle 1, the cradle, side plates and movable jaw move as a unit upon a fulcrum formed by the engagement of the surface 14 with the surface 15 until the parts are set. In brief, the first biting action is taken by the pivot 19, this not requiring very much pressure and the pull or strain being thereafter taken by the handle 1 by the rotary contact of the cradle 11 therewith.

Some classes of the trade prefer a wrench wherein the jaw is always controlled by the worm, and to meet this demand in my wrench and at the same time retain all of its other advantages, I have provided the mechanism shown in Fig. 4, wherein the worm 38 is fixed upon a shaft 39 that rotates in the blocks 40 secured in the outer ends of the arms 41—41 of the side plates 42. In this construction the worm always lies parallel with the movable jaw and maintains its engagement with the teeth therein.

There are minor changes and alterations that can be made within my invention, and I would therefore have it understood that I do not limit myself to the exact construction herein shown and described, but claim all that falls fairly within the spirit and scope of my invention.

Having described my invention, what I claim as new and desire to secure by Letters Patent, is:—

1. In a wrench, the combination with a handle; of a movable jaw held against lateral movement by said handle; an interposed cradle held against lateral movement by said movable jaw; and means for movably securing said jaw to said cradle.

2. In a wrench, the combination with a handle; of a movable jaw held against lateral movement by said handle; an interposed cradle held against lateral movement by said movable jaw; and means pivotally connected with said cradle for movably securing said movable jaw thereto.

3. In a wrench, the combination with a handle; of a movable jaw held against lateral movement by said handle; a cradle held against lateral movement by said movable jaw; means for movably securing said jaw to said cradle; and means connected with said securing means for imparting a positive movement to said jaw.

4. In a wrench, the combination with a handle; of a movable jaw held against lateral movement by said handle; a cradle having a fulcrum engagement with said handle and held against lateral movement by said jaw; members having a pivotal engagement with said cradle and overlapping the movable jaw; and means connected with said members for positively moving said movable jaw within said cradle.

5. In a wrench, the combination with a handle; of a cradle held against lateral movement by said handle; a movable jaw within said cradle; means connected with said cradle and engaging said movable jaw to prevent the lateral movement of said cradle in relation to said handle; and means connected therewith for actuating said movable jaw.

6. In a wrench, the combination with a handle; of a movable jaw held against lateral movement by said handle; a cradle held against lateral movement by said movable jaw; and means for movably securing all of said parts together, said means permitting the movement of said movable jaw within said cradle and the said cradle in relation to said handle.

7. In a wrench, the combination with a handle; of a movable jaw held against lateral movement by said handle; a cradle held against lateral movement by said movable jaw; and means pivotally connected with said cradle for movably securing all of said parts together, the connection between said parts being such that in operation the said movable jaw first moves in relation to said cradle and thereafter the cradle and movable jaw move as a unit in relation to said handle.

8. In a wrench, the combination with a handle; of a movable jaw; a cradle, said handle and cradle having parts thereon that lie upon both sides of said movable jaw whereby lateral movement of said handle and cradle are prevented; and means connected with said cradle and having engagement with said movable jaw for moving the same parallel to its length.

9. In a wrench, the combination with a handle; of a movable jaw; a cradle within which said jaw is movable; a member pivotally connected with said cradle and overlapping said handle, movable jaw and cradle; a worm rotatably and pivotally connected with said member and having engagement with said movable jaw.

10. In a wrench, the combination with a handle; of a movable jaw; a cradle; a side plate pivotally connected with said cradle having parts thereon that overlap said handle; a movable jaw having contact with the

overhanging portion of said side plate; and a worm rotatably and pivotally connected with said side plate and having an operative connection with said movable jaw.

11. In a wrench, the combination with a handle, having ears thereon; a movable jaw between said ears; a cradle between said handle and movable jaw, having a fulcrum engagement with said handle; side plates pivotally connected with said cradle and lying across the side of said handle and movable jaw; a block pivotally connected between said side plates; and a worm rotatably mounted upon said block.

12. In a wrench, the combination with a handle; of a movable jaw; a cradle; side plates connected with said cradle; means for adjustably connecting said side plates to said movable jaw; and means for connecting all of said parts, whereby said movable jaw will move upon two different fulcrums, the first being farther from the toothed portion of said jaw than the latter.

In testimony whereof I affix my signature in presence of two witnesses.

JULIAN A. GILES.

Witnesses:
GEORGE E. HALL,
SAMUEL A. GARDNER.

**Copies of this patent may be obtained for five cents each, by addressing the "Commissioner of Patents, Washington, D. C."**