(19) Europäisches Patentamt
European Patent Office
Office européen des brevets

(11) EP 1 726 877 B1

(12) **EUROPEAN PATENT SPECIFICATION**

(45) Date of publication and mention of the grant of the patent:
13.08.2008 Bulletin 2008/33

(51) Int Cl.:
F23G 5/16 *(2006.01)*
F23L 13/02 *(2006.01)*
F23G 5/50 *(2006.01)*
F23L 9/04 *(2006.01)*
F23M 9/04 *(2006.01)*

(21) Application number: **06018526.1**

(22) Date of filing: **03.04.2003**

(54) **Method and device for controlling injection of primary and secondary air in an incineration system**

VERFAHREN UND VORRICHTUNG ZUR REGELUNG DER PRIMÄR- UND SEKUNDÄRLUFTEINSPRITZUNG EINER MÜLLVERBRENNUNGSANLAGE

Méthode et appareillage pour contrôler l'injection d'air primaire et d'air secondaire d'un incinérateur de déchets

(84) Designated Contracting States:
AT BE BG CH CY CZ DE DK EE ES FI FR GB GR HU IE IT LI LU MC NL PT RO SE SI SK TR

(30) Priority: **03.04.2002 EP 02447055**
11.04.2002 US 371992 P

(43) Date of publication of application:
29.11.2006 Bulletin 2006/48

(62) Document number(s) of the earlier application(s) in accordance with Art. 76 EPC:
03717267.3 / 1 490 632

(73) Proprietor: **Keppel Seghers Holdings Pte Ltd**
Singapore 098632 (SG)

(72) Inventors:
- **Adams, Bart**
  2600 Berchem (BE)
- **De Proft, Renaat**
  9260 Wichelen (BE)

(74) Representative: **Brants, Johan P.E. et al**
De Clercq, Brants & Partners cv
Edgard Gevaertdreef 10a
9830 Sint-Martens-Latem (BE)

(56) References cited:
EP-A- 0 621 448
EP-A2- 0 312 818
CA-C- 1 324 537
DE-A- 19 705 938
DE-A1- 10 012 895
US-B1- 6 279 495
EP-A- 1 081 434
EP-A2- 0 576 955
DE-A- 4 401 821
DE-A1- 3 038 875
US-A- 5 450 803

Note: Within nine months of the publication of the mention of the grant of the European patent in the European Patent Bulletin, any person may give notice to the European Patent Office of opposition to that patent, in accordance with the Implementing Regulations. Notice of opposition shall not be deemed to have been filed until the opposition fee has been paid. (Art. 99(1) European Patent Convention).

EP 1 726 877 B1

Printed by Jouve, 75001 PARIS (FR)

Description

[0001] The invention relates to a device for incinerating waste comprising rows of secondary air nozzles. The invention relates to a method for controlling several parameters of secondary air injection including at least one of the parameters: flow, speed, turbulence, volume, composition and temperature, for optimizing the incinerating process in an incineration system. The invention relates to a method for controlling primary air injection. The invention also relates to an incineration equipment, functioning in accordance with said methods enabling the control of primary and secondary air injection.

Background of the invention

[0002] The combustion process of waste is a rather complex one because homogeneous and heterogeneous reactions take place, not only on the incineration grate, but also above the grate. The furnace-boiler part comprising a combustion chamber and a post-combustion chamber is a critical part of an incineration installation and needs to be designed with great care. The most important properties for this type of furnace-boiler are good performance, high flexibility, good availability and reliability with an acceptable lifetime of the different pressure parts. Flexibility is of utmost importance, due to the variability of the waste characterized by e.g. its composition and calorific value. The furnace-boiler must be able to perform under these permanent changing conditions and produce steam or heat, in an as stable as possible way.

[0003] Since the implementation of the EU Waste Incineration directive (2000/076/EC), requiring a residence time of at least two seconds at temperatures above 850°C for municipal waste, combined with the intensive use of selective residual waste and high calorific "problematic" and heterogeneous waste fuels, conditions for achieving a complete combustion have become more demanding today. A large number of existing installations are not designed to operate under these conditions and needed primary modifications of the combustion system in order to comply with these new requirements.

[0004] To comply with these new requirements several new technologies have been developed and implemented during recent years. In order to increase the efficiency of the combustion and reduce the discharge of pollutants into the atmosphere, secondary air providing additional oxygen for the combustion process is delivered to the furnace-boiler to improve burning of the combustible waste gases. For example, DE4401821 describes a method and device for improving the combustion consisting of a displacement body with a secondary air supply system. With this new secondary air injection system the combustion and post-combustion process can be strongly improved and can result in a much shorter and clearly defined burnout of the flue gases.

[0005] As used herein, the terms displacement body, bluff body and prism body are used interchangeably. However, one of the main problems of obtaining an efficient combustion is the good mixing of the secondary air. The introduction of secondary air is difficult to fine-tune. Moreover, due to the absence of enough turbulence induced by injection of the secondary air in the furnace-boiler, adequate mixing of the secondary air with the combustible waste gases is not achieved, resulting in an incomplete combustion. In addition, the introduced secondary air is often not properly conditioned to take immediately part in the post-combustion process when injected in the furnace-boiler. Consequently, it will take a longer time for the post-combustion process to reach a complete burnout of the flue gases, and injection of non-conditioned secondary air in the furnace-boiler may even slow down the post-combustion process.

[0006] Another problem is that the temperature throughout a cross-section of the post-combustion chamber is not constant; pockets of flue gases are sometimes hotter or cooler than the optimum temperature causing undesirable side effects such as corrosion, slagging and fouling.

[0007] In order to solve above-mentioned problems, the present invention provides a new device comprising an improvement on the primary air and secondary air injection systems, a method for controlling several parameters of the secondary air, including flow, speed, turbulence, volume, composition and temperature, and a method for controlling primary air injection. Using this device and method leads to a highly efficient combustion process characterized by generating low initial emissions and able to cope with the EU-directive regulations.

Summary of the invention

[0008] One embodiment of the invention is a method for incinerating solid materials in a device which device comprises:

- a feeding hopper with pusher (1) able to introduce the solid materials in a furnace,
- a incinerator grate (25) comprising several grate elements,
- a furnace (2) able to incinerate said solid materials,
- a post-combustion chamber (4) able to burn out the produced flue gases resulting from said incineration,
- a primary air supply system (23) capable of differentially distributing air across different grate elements and across the width of the grate,
- a displacement body (5) placed at the combustion chamber exit and entrance of the post-combustion chamber (4) able to split the produced flue gas flow in two separate flue gas streams (A, B - Figs. 1, 2, 3a, 3b and 4),
- a bend in such shape of the device inner front and rear walls, that together with the outline of the displacement body creates the inlet of the post-combustion chamber,
- two pairs of rows of secondary air injection nozzles

(30, 31) located immediately at the combustion chamber exit and entrance of the post-combustion chamber, one pair located on furnace front membrane wall and the opposing displacement body wall; another pair located on the furnace rear membrane wall and the opposing displacement body wall,

said method comprising the steps of:

a) monitoring the oxygen content of the flue gases,
b) determining from step a) the total air flow or correction thereof required by said device,
c) distributing air to the primary (23) and secondary air supply systems such that the total air flow is maintained according to step b),
d) monitoring the temperature of each gas stream (A, B - Figs. 1, 2, 3a, 3b and 4),
e) determining the hotter of the two gas streams (A, B - Figs. 1, 2, 3a, 3b and 4),
f) increasing the flow of secondary air through the secondary air nozzles (30, 31) located below the hotter of the two gas streams, and decreasing the flow of secondary air in the nozzles located below of the cooler of the two gas streams, so maintaining overall the same total of air flow in the secondary air system, and
g) not changing the flow of secondary air if both gas streams have the same temperature according to step e), so maintaining overall the same total of air flow in the secondary air system.

[0009] Another embodiment of the invention is a method as described above further comprising the steps of:

h) decreasing the flow of primary air beneath the grate elements proximal to the feeding hopper with pusher (1), when the hotter of two gas streams determined in step
e) is located proximal to the feeding hopper with pusher, and increasing the flow of primary air in the area beneath the remainder of the grate elements, so maintaining the same total of air flow in the primary air system,
i) increasing the flow of primary air beneath the grate elements proximal to the feeding hopper with pusher, when the hotter of two gas streams determined in step e) is located proximal to the output system, and decreasing the flow of primary air in the area beneath the remainder of the grate elements, so maintaining the same total of air flow in the primary air system,
j) not changing the flow of primary air if both gas streams have the same temperature according to step e), so maintaining the same total of air flow in the primary air system.

[0010] Another embodiment of the invention is a device for incinerating solid materials comprising:

- a feeding hopper with pusher (1) able to introduce the solid materials in a furnace,
- a incinerator grate (25) comprising several grate elements,
- a furnace (2) able to incinerate said solid materials,
- a post-combustion chamber (4) able to burn out the produced flue gases resulting from said incineration,
- a primary air supply system (23) capable of differentially distributing air across different grate elements and across the width of the grate,
- a displacement body (5) placed at the combustion chamber exit and entrance of the post-combustion chamber (4) able to split the produced flue gas flow in two separate flue gas streams (A, B - Figs. 1, 2, 3a, 3b and 4),
- a bend in such shape of the device inner front and rear walls, that together with the outline of the displacement body creates the inlet of the post-combustion chamber,
- two pairs of rows of secondary air injection nozzles (30, 31) located immediately at the combustion chamber exit and entrance of the post-combustion chamber, one pair located on furnace inner front wall and the opposing displacement body wall; another pair located on the furnace inner rear wall and the opposing displacement body wall,

said device configured to:

a) monitor the oxygen content of the flue gases,
b) determine from step a) the total air flow or correction thereof required by said device,
c) distribute air to the primary (23) and secondary air supply systems such that the total air flow is maintained according to step b),
d) monitor the temperature of each gas stream (A, B - Figs. 1, 2, 3a, 3b and 4),
e) determine the hotter of the two gas streams (A, B- Figs. 1, 2, 3a, 3b and 4),
f) increase the flow of secondary air through the secondary air nozzles (30, 31) located below the hotter of the two gas streams, and decreasing the flow of secondary air in the nozzles located below of the cooler of the two gas streams, so maintaining overall the same total of air flow in the secondary air system, and
g) not change the flow of secondary air if both gas streams have the same temperature according to step e), so maintaining overall the same total of air flow in the secondary air system.

[0011] Another embodiment of the invention is a device as described above further configured to:

h) decrease the flow of primary air beneath the grate elements proximal to the feeding hopper with pusher (1), when the hotter of two gas streams determined in step e) is located proximal to the feeding hopper

with pusher, and increasing the flow of primary air in the area beneath the remainder of the grate elements, so maintaining the same total of air flow in the primary air system,

i) increase the flow of primary air beneath the grate elements proximal to the feeding hopper with pusher, when the hotter of two gas streams determined in step e) is located proximal to the output system, and decreasing the flow of primary air in the area beneath the remainder of the grate elements, so maintaining the same total of air flow in the primary air system,

j) not change the flow of primary air if both gas streams have the same temperature according to step e), so maintaining the same total of air flow in the primary air system.

[0012] The device as described above may provide secondary air via secondary air supply ducts ending in injection nozzles, passing through the front- and rear-wall of said device as well as through the membrane-wall of the displacement body.

[0013] The device as described above may incorporate inner front and rear walls bent in such shape that, together with the outline of the displacement body, two venturi-shaped flue gas passages with an opening angle (α / β) between 20° and 40° are created in order to increase the flue gas turbulence in the venturi-shaped mixing zone.

[0014] The device as described above may incorporate the displacement body in the shape of a distorted rhomboidal prism.

[0015] A method for incinerating solid materials may comprise the use of a device as described above.

[0016] Present invention provides a method for controlling several parameters of the primary air and secondary air injection and a device able to perform said method, which will greatly improve the efficiency of the combustion process, which will reduce emissions and will comply with the more severe combustion requirements.

Detailed description of the invention

[0017] Several examples of possible execution according to the present invention are illustrated in the following Figures.

Fig. 1 shows a cross-sectional view of an incineration furnace-boiler or incineration device provided with a displacement body or prism [5] according to the invention.

Fig. 2 shows a fragment of an incinerating system according to above description, and angles formed by the inner walls of the post combustion chamber.

[0018] Fig. 3a and 3b demonstrate a method according to the invention for correcting temperature imbalances due to high and low calorific value waste and depending on the heat release profile

[0019] Fig. 4 shows a cross-sectional view of an alternative incineration furnace-boiler or incineration device provided with a displacement body or prism [5] according to the invention, having the same features and labels as that of Figure 1a.

[0020] A combustion device and method, may use a specific secondary air injection system in the center of the combustion 20 zone, immediately at the combustion chamber exit and before entering the post-combustion chamber, and controlled by at least one of the following parameters: flow, turbulence, volume, composition, speed, or temperature. The secondary air is supplied into the divided flue gas streams "A" and "B" (see Figure 1), via a secondary air supply duct [12], [13], [14] to several nozzle inlets [30] and [31] in the furnace-boiler front [6] and rear [7] wall and on both sides of the displacement body [5].

[0021] The objective of the present invention is to optimize the combustion process in an incineration system and to assure a complete combustion of the flue gases, in order to fulfill the requirements of the EU-Waste Incineration Directive (2000/76/EC) and increase performance and lifetime of pressure part components of the incineration device. The use of this new, controlled secondary air injection system leads to more effective mixing between the oxygen supplied by the secondary air and the flue gases and will increase combustion performance. Consequently, said device and method results in a much shorter and clearly defined burnout-zone of the flue gases in the post-combustion chamber of the furnace-boiler, a few meters above the displacement body. The listed parameters can be adjusted according to the requirements of the incinerating process. In addition, a suitable furnace-boiler geometry can contribute to a more uniform velocity and gas flow distribution and avoid flue gas recirculation or dead zones throughout the different sections of the furnace-boiter. Therefore, the furnace-boiler has a double venturi-like transition section between combustion and post-combustion chamber, which also promotes the mixing of the partial flue gas flows "A" and "B" with the injected secondary air. Improved mixing of the secondary air and the flue gases increases the efficiency of the combustion process.

[0022] Figure 1 shows the cross section of the furnace-boiler, combustion and post-combustion chamber of a typical incinerator arrangement, particularly designed for Incineration of solid waste or biomass, consisting of a furnace [2] with an incineration grate [25], receiving the solid materials through a feeding hopper with pusher [1]. The produced flue gases are conducted in a combustion chamber [3] and a post-combustion chamber (4). Hoppers [22] underneath the grate [25], are placed for collection of the siftings of the grate and serving at the same time as primary air supply channels. The primary air is supplied via several air ducts [23], At the end of the grate [25], the ashes fall via a shaft [21] into an ash extractor (not shown). The produced flue gases, not yet completely

burned out, are divided in two streams by a displacement body [5], Installed at the entrance of the post-combustion chamber [4]. By placing the displacement body [5] at the combustion chamber exit [3] and the entrance into the post-combustion chamber [4], the flue gases passage is divided in two flow channels "A" and "B". Secondary air is injected through four rows of nozzles located at the entrance of the post-combustion chamber [4] where the displacement body [5] is located. The secondary air is conducted via nozzles [30] in the front [8] and rear wall [7] of the furnace-boiler as well as via nozzles [31] of the displacement body [5]. The flue gases are mixed with secondary air, resulting in an almost complete burnout of the flue gases a few meters above the displacement body [5] and also resulting in shorter flames and more uniform oxygen concentrations. The secondary air is supplied by a secondary air fan [9] via secondary air ducts [11], provided with secondary air regulating valves [15], to the secondary air supply ducts [12], [13], [14] into the injection nozzles [30], [31].

[0023] Control of the secondary air may be by at least one of the following parameters: flow, turbulence, volume, composition, speed, or temperature.

[0024] An example of a device and method of how several parameters for secondary air injection are controlled according to the invention is illustrated in Figure 1. The secondary air is optimally injected directly into the flow of waste gases, at the combustion chamber exit and at the entrance of the post-combustion chamber. The secondary air is injected into the divided flue gas streams "A" and "B", via a secondary air supply duct [12], [13], [14] leading to several nozzles [30], [31] located in the furnace-boiler front and rear wall and on both sides of the displacement body [5]. According to Figure 1 a, furnace-boiler front [6] and rear [7] membrane wall and the membrane wall [19] of the displacement body [5] are provided with refractory materials through which a series of nozzles [30], [31] pass.

[0025] The total oxygen introduced into furnace-boiler as disclosed herein as primary and secondary air may be determined by the oxygen content of the flue gases. The oxygen so introduced is distributed between the primary and secondary inlet systems according to methods of the art. The distribution primary and secondary air may be attenuated by monitoring the temperatures in gas flow sections A and B as described below.

[0026] A flue gas temperature measurement may be installed into a furnace-boiler as described herein, a few meters above the outlet of the two flue gas streams "A" and "B," to measure the actual temperature for each flow section. In the invention, the purpose of this temperature measurement is to maintain, during the combustion process, nearly the same flue gas temperature (ca. 1.000°C) in front section "A" as in the rear section "B", by means of a variable secondary air flow. Consequently, when a flue gas temperature increase is observed in section "A", the secondary airflow for section "A" is increased until the equal temperature profile is automatically re-established. At the same time, secondary airflow for section "B" is reduced in order to keep the total secondary airflow constant, unless a general temperature increase is noticed in both sections whereby the total secondary airflow is increased.

[0027] The temperature measurement may be linked to the capability of the secondary air injection system to respond to modified furnace conditions such as a shift in the heat-release profile on the grate. For instance, when high calorific waste suddenly enters the furnace, combustion of the waste will start on the first element of the grate and the flue gas temperature in section A will rise above the temperature setpoint, so shifting the heat release profile towards the feeding hopper. The setpoint may be any temperature defined by the user. The set point temperature may be a value in the range of 900 to 1100 °C. The system recognizes the over-temperature and the temperature imbalance and reacts accordingly as described above. A similar process, but in the opposite direction will occur when low calorific waste is introduced and combustion on the grate is delayed. This is exemplified in Figure 3a, wherein a temperature sensor [91], [92] is placed in each of the flue gas streams above the displacement body [5]. When high calorific value waste [93] enters the furnace, the temperature of the gas in flue stream A increases, so raising the temperature detected by the sensor [91] placed over stream A above the set point. The increase in temperature and the imbalance causes more secondary air to be injected from the nozzles below the hotter stream of air [94], and also less secondary air to be injected from the nozzles below the cooler stream of air [95].

[0028] In Figure 3b, when lower calorific value waste [96] enters a furnace as disclosed herein, the heat release profile shifts slightly away from the hopper and towards the exit [901]. There is a slight increase in temperature of the gas in flue stream B, so raising the temperature detected by the sensor [92] placed over stream B above the set point. The increase in temperature and the imbalance causes more secondary air to injected from the nozzles below the hotter stream of air [97], and also less secondary air to be injected from the nozzles below the cooler stream of air [98].

[0029] The detection of the temperature in the gas flow sections A and B may be used as a pre-indication of the type of waste entering the furnace, and may be connected to the process control of the grate speed and primary air distribution along the different grate elements. For instance, as in Figure 3a, when high calorific waste [93] enters a furnace as disclosed herein, combustion of the waste will start on the first element of the grate and the heat release profile of the grate will be shifted towards the waste input (hopper) end [99] of the grate. The consequence is that waste will be incinerated towards the waste input end of the grate [99]. According to the invention, the shift of heat release profile is detected by the flue gas temperature sensor in section A [91], which would rise above the temperature setpoint. The setpoint

may be any temperature defined as described above. The system detects the over-temperature and recognizes the temperature imbalance between section A and section B, and reacts by decreasing the supply of primary air beneath or proximal to the high calorific waste [R1 to R2] so as to shift the heat-release profile back towards to the region of the post-combustion chamber. At the same time, the primary airflow in the remaining positions of the grate [R3 to R5] is increased in order to keep the total primary airflow constant. A similar process, but in the opposite direction will occur when low calorific waste is introduced, and combustion on the grate is delayed, so shifting the heat release profile in the direction of the waste output [901] (Figure 3b).

Claims

1. A method for incinerating solid materials in a device which device comprises:

- a feeding hopper with pusher (1) able to introduce the solid materials in a furnace,
- a incinerator grate (25) comprising several grate elements,
- a furnace (2) able to incinerate said solid materials,
- a post-combustion chamber (4) able to burn out the produced flue gases resulting from said incineration,
- a primary air supply system (23) capable of differentially distributing air across different grate elements and across the width of the grate,
- a displacement body (5) placed at the combustion chamber exit and entrance of the post-combustion chamber (4) able to split the produced flue gas flow in two separate flue gas streams (A, B — Figs. 1, 3a, 3b),
- a bend in such shape of the device inner front and rear walls, that together with the outline of the displacement body creates the inlet of the post-combustion chamber,
- two pairs of rows of secondary air injection nozzles (30, 31) located immediately at the combustion chamber exit and entrance of the post-combustion chamber, one pair located on furnace front membrane wall and the opposing displacement body wall; another pair located on the furnace rear membrane wall and the opposing displacement body wall,

said method comprising the steps of:

a) monitoring the oxygen content of the flue gases,
b) determining from step a) the total air flow or correction thereof required by said device,
c) distributing air to the primary (23) and secondary air supply systems such that the total air flow is maintained according to step b),
d) monitoring the temperature of each gas stream (A, B — Figs. 1, 3a, 3b),
e) determining the hotter of the two gas streams (97, 98),
f) increasing the flow of secondary air through the secondary air nozzles (30, 31) located below the hotter of the two gas streams, and decreasing the flow of secondary air in the nozzles located below of the cooler of the two gas streams, so maintaining overall the same total of air flow in the secondary air system, and
g) not changing the flow of secondary air if both gas streams have the same temperature according to step e), so maintaining overall the same total of air flow in the secondary air system.

2. A method according to claim 1 further comprising the steps of:

h) decreasing the flow of primary air beneath the grate elements proximal to the feeding hopper with pusher (1), when the hotter of two gas streams determined in step
e) is located proximal to the feeding hopper with pusher, and increasing the flow of primary air in the area beneath the remainder of the grate elements, so maintaining the same total of air flow in the primary air system,
i) increasing the flow of primary air beneath the grate elements proximal to the feeding hopper with pusher, when the hotter of two gas streams determined in step e) is located proximal to the output system, and decreasing the flow of primary air in the area beneath the remainder of the grate elements, so maintaining the same total of air flow in the primary air system,
j) not changing the flow of primary air if both gas streams have the same temperature according to step e), so maintaining the same total of air flow in the primary air system.

3. A device for incinerating solid materials comprising:

- a feeding hopper with pusher (1) able to introduce the solid materials in a furnace,
- a incinerator grate (25) comprising several grate elements,
- a furnace (2) able to incinerate said solid materials,
- a post-combustion chamber (4) able to burn out the produced flue gases resulting from said incineration,
- a primary air supply system (23) capable of differentially distributing air across different grate elements and across the width of the grate,
- a displacement body (5) placed at the combus-

tion chamber exit and entrance of the post-combustion chamber (4) able to split the produced flue gas flow in two separate flue gas streams (A, B — Figs. 1, 3a, 3b),
- a bend in such shape of the device inner front and rear walls, that together with the outline of the displacement body creates the inlet of the post-combustion chamber,
- two pairs of rows of secondary air injection nozzles (30, 31) located immediately at the combustion chamber exit and entrance of the post-combustion chamber, one pair located on furnace inner front wall and the opposing displacement body wall; another pair located on the furnace inner rear wall and the opposing displacement body wall,

said device configured to:

a) monitor the oxygen content of the flue gases,
b) determine from step a) the total air flow or correction thereof required by said device,
c) distribute air to the primary (23) and secondary air supply systems such that the total air flow is maintained according to step b),
d) monitor the temperature of each gas stream (A, B— Figs. 1, 3a, 3b),
e) determine the hotter of the two gas streams (97, 98),
f) increase the flow of secondary air through the secondary air nozzles (30, 31) located below the hotter of the two gas streams, and decreasing the flow of secondary air in the nozzles located below of the cooler of the two gas streams, so maintaining overall the same total of air flow in the secondary air system, and
g) not change the flow of secondary air if both gas streams have the same temperature according to step e), so maintaining overall the same total of air flow in the secondary air system.

4. A device according to claim 3 further configured to:

h) decrease the flow of primary air beneath the grate elements proximal to the feeding hopper with pusher (1), when the hotter of two gas streams determined in step e) is located proximal to the feeding hopper with pusher, and increasing the flow of primary air in the area beneath the remainder of the grate elements, so maintaining the same total of air flow in the primary air system,
i) increase the flow of primary air beneath the grate elements proximal to the feeding hopper with pusher, when the hotter of two gas streams determined in step e) is located proximal to the output system, and decreasing the flow of primary air in the area beneath the remainder of the grate elements, so maintaining the same total of air flow in the primary air system,
j) not change the flow of primary air if both gas streams have the same temperature according to step e), so maintaining the same total of air flow in the primary air system.

Patentansprüche

1. Verfahren zum Verbrennen fester Materialien in einer Vorrichtung, wobei die Vorrichtung Folgendes umfasst:

- einen Zuführungstrichter mit Schubvorrichtung (1), der dazu in der Lage ist, die festen Materialien in einen Ofen einzuführen,
- einen Verbrennungsrost (25), der mehrere Rostelemente umfasst,
- einen Ofen (2), der dazu in der Lage ist, die festen Materialien zu verbrennen,
- eine Nachverbrennungskammer (4), die dazu in der Lage ist, die erzeugten Verbrennungsgase, die sich aus der Verbrennung ergeben, auszubrennen,
- ein Primärluft-Zufuhrsystem (23), das dazu in der Lage ist, unterscheidend Luft über unterschiedliche Rostelemente und über die Breite des Rostes zu verteilen,
- einen Verdrängungskörper (5), der an dem Verbrennungskammerausgang und dem Eingang zur Nachverbrennungskammer (4) angeordnet ist, der dazu in der Lage ist, den erzeugten Verbrennungsgasdurchfluss in zwei gesonderte Verbrennungsgasströme (A, B - Fig. 1, 3a, 3b) zu spalten,
- eine Biegung in einer solchen Form der vorderen und der hinteren Innenwand der Vorrichtung, die zusammen mit dem Umriss des Verdrängungskörpers den Einlass der Nachverbrennungskammer erzeugt,
- zwei Paare von Reihen von Sekundärluft-Einspritzdüsen (30, 31), die unmittelbar an dem Verbrennungskammerausgang und dem Eingang zur Nachverbrennungskammer angeordnet sind, wobei ein Paar an der vorderen Ofenmembranwand und der gegenüberliegenden Verdrängungskörperwand angeordnet ist und ein anderes Paar an der hinteren Ofenmembranwand und der gegenüberliegenden Verdrängungskörperwand angeordnet ist,

wobei das Verfahren die folgenden Schritte umfasst:

a) Überwachen des Sauerstoffgehalts der Verbrennungsgase,
b) Bestimmen des gesamten Luftdurchflusses oder einer für die Vorrichtung erforderlichen

Korrektur desselben aus Schritt a),
c) Verteilen von Luft an das Primär- (23) und das Sekundärluft-Zufuhrsystem derart, dass der gesamte Luftdurchfluss entsprechend Schritt b) aufrechterhalten wird,
d) Überwachen der Temperatur jedes Gasstroms (A, B — Fig. 1, 3a, 3b),
e) Bestimmen des heißeren der zwei Gasströme (97, 98),
f) Steigern des Durchflusses von Sekundärluft durch die Sekundärluftdüsen (30, 31), die unterhalb des heißeren der zwei Gasströme angeordnet sind, und Vermindern des Durchflusses von Sekundärluft in den Düsen, die unterhalb des kühleren der zwei Gasströme angeordnet sind, um so insgesamt die gleiche Summe des Luftdurchflusses in dem Sekundärluftsystem aufrechtzuerhalten, und
g) nicht Verändern des Durchflusses von Sekundärluft, falls die beiden Gasströme nach Schritt e) die gleiche Temperatur haben, um so insgesamt die gleiche Summe des Luftdurchflusses in dem Sekundärluftsystem aufrechtzuerhalten.

2. Verfahren nach Anspruch 1, das ferner die folgenden Schritte umfasst:

h) Vermindern des Durchflusses von Primärluft unterhalb der Rostelemente proximal zu dem Zufuhrtrichter mit Schubvorrichtung (1), wenn der in Schritt e) bestimmte heißere der zwei Gasströme proximal zu dem Zufuhrtrichter mit Schubvorrichtung angeordnet ist, und Steigern des Durchflusses von Primärluft in dem Bereich unterhalb des Restes der Rostelemente, um so die gleiche Summe des Luftdurchflusses in dem Primärluftsystem aufrechtzuerhalten,
i) Steigern des Durchflusses von Primärluft unterhalb der Rostelemente proximal zu dem Zufuhrtrichter mit Schubvorrichtung, wenn der in Schritt e) bestimmte heißere der zwei Gasströme proximal zu dem Ausgangssystem angeordnet ist, und Vermindern des Durchflusses von Primärluft in dem Bereich unterhalb des Restes der Rostelemente, um so die gleiche Summe des Luftdurchflusses in dem Primärluftsystem aufrechtzuerhalten,
j) nicht Verändern des Durchflusses von Primärluft, falls die beiden Gasströme nach Schritt e) die gleiche Temperatur haben, um so insgesamt die gleiche Summe des Luftdurchflusses in dem Primärluftsystem aufrechtzuerhalten.

3. Vorrichtung zum Verbrennen fester Materialien, die Folgendes umfasst:

- einen Zuführungstrichter mit Schubvorrichtung (1), der dazu in der Lage ist, die festen Materialien in einen Ofen einzuführen,
- einen Verbrennungsrost (25), der mehrere Rostelemente umfasst,
- einen Ofen (2), der dazu in der Lage ist, die festen Materialien zu verbrennen,
- eine Nachverbrennungskammer (4), die dazu in der Lage ist, die erzeugten Verbrennungsgase, die sich aus der Verbrennung ergeben, auszubrennen,
- ein Primärluft-Zufuhrsystem (23), das dazu in der Lage ist, unterscheidend Luft über unterschiedliche Rostelemente und über die Breite des Rostes zu verteilen,
- einen Verdrängungskörper (5), der an dem Verbrennungskammerausgang und dem Eingang zur Nachverbrennungskammer (4) angeordnet ist, der dazu in der Lage ist, den erzeugten Verbrennungsgasdurchfluss in zwei gesonderte Verbrennungsgasströme (A, B - Fig. 1, 3a, 3b) zu spalten,
- eine Biegung in einer solchen Form der vorderen und der hinteren Innenwand der Vorrichtung, die zusammen mit dem Umriss des Verdrängungskörpers den Einlass der Nachverbrennungskammer erzeugt,
- zwei Paare von Reihen von Sekundärluft-Einspritzdüsen (30, 31), die unmittelbar an dem Verbrennungskammerausgang und dem Eingang zur Nachverbrennungskammer angeordnet sind, wobei ein Paar an der vorderen Ofenmembranwand und der gegenüberliegenden Verdrängungskörperwand angeordnet ist und ein anderes Paar an der hinteren Ofenmembranwand und der gegenüberliegenden Verdrängungskörperwand angeordnet ist,

wobei die Vorrichtung zu Folgendem konfiguriert ist:

a) Überwachen des Sauerstoffgehalts der Verbrennungsgase,
b) Bestimmen des gesamten Luftdurchflusses oder einer für die Vorrichtung erforderlichen Korrektur desselben aus Schritt a),
c) Verteilen von Luft an das Primär- (23) und das Sekundärluft-Zufuhrsystem derart, dass der gesamte Luftdurchfluss entsprechend Schritt b) aufrechterhalten wird,
d) Überwachen der Temperatur jedes Gasstroms (A, B — Fig. 1, 3a, 3b),
e) Bestimmen des heißeren der zwei Gasströme (97, 98),
f) Steigern des Durchflusses von Sekundärluft durch die Sekundärluftdüsen (30, 31), die unterhalb des heißeren der zwei Gasströme angeordnet sind, und Vermindern des Durchflusses von Sekundärluft in den Düsen, die unterhalb des kühleren der zwei Gasströme angeordnet

sind, um so insgesamt die gleiche Summe des Luftdurchflusses in dem Sekundärluftsystem aufrechtzuerhalten, und
g) nicht Verändern des Durchflusses von Sekundärluft, falls die beiden Gasströme nach Schritt e) die gleiche Temperatur haben, um so insgesamt die gleiche Summe des Luftdurchflusses in dem Sekundärluftsystem aufrechtzuerhalten.

4. Vorrichtung nach Anspruch 3, die ferner zu Folgendem konfiguriert ist:

h) Vermindern des Durchflusses von Primärluft unterhalb der Rostelemente proximal zu dem Zufuhrtrichter mit Schubvorrichtung (1), wenn der in Schritt e) bestimmte heißere der zwei Gasströme proximal zu dem Zufuhrtrichter mit Schubvorrichtung angeordnet ist, und Steigern des Durchflusses von Primärluft in dem Bereich unterhalb des Restes der Rostelemente, um so die gleiche Summe des Luftdurchflusses in dem Primärluftsystem aufrechtzuerhalten,
i) Steigern des Durchflusses von Primärluft unterhalb der Rostelemente proximal zu dem Zufuhrtrichter mit Schubvorrichtung, wenn der in Schritt e) bestimmte heißere der zwei Gasströme proximal zu dem Ausgangssystem angeordnet ist, und Vermindern des Durchflusses von Primärluft in dem Bereich unterhalb des Restes der Rostelemente, um so die gleiche Summe des Luftdurchflusses in dem Primärluftsystem aufrechtzuerhalten,
j) nicht Verändern des Durchflusses von Primärluft, falls die beiden Gasströme nach Schritt e) die gleiche Temperatur haben, um so insgesamt die gleiche Summe des Luftdurchflusses in dem Primärluftsystem aufrechtzuerhalten.

Revendications

1. Procédé pour incinérer des matériaux solides dans un dispositif, lequel dispositif comprend :

- une trémie d'alimentation avec poussoir (1) capable d'introduire les matériaux solides dans un fourneau,
- une grille d'incinérateur (25) comprenant plusieurs éléments de grille,
- un fourneau (2) capable d'incinérer lesdits matériaux solides,
- une chambre de postcombustion (4) capable de brûler les gaz de cheminée produits résultant de ladite incinération,
- un système d'alimentation d'air principal (23) capable de distribuer différentiellement l'air à travers les différents éléments de grille et sur la largeur de la grille,
- un corps de déplacement (5) placé à la sortie de la chambre de combustion et à l'entrée de la chambre de postcombustion (4) capable de diviser le flot de gaz de cheminée produits en deux flux distincts de gaz de cheminée (A, B - figures 1, 3a, 3b),
- une courbe de la forme des parois intérieures avant et arrière du dispositif qui, avec le contour du corps de déplacement, crée l'entrée de la chambre de postcombustion,
- deux paires de rangées de gicleurs d'injection d'air secondaire (30, 31) situées immédiatement à la sortie de la chambre de combustion et à l'entrée de la chambre de postcombustion, une paire située sur la paroi de membrane avant de fourneau et sur la paroi de corps de déplacement opposée ; une autre paire située sur la paroi de membrane arrière de fourneau et sur la paroi de corps de déplacement opposée,

ledit procédé comprenant les étapes consistant à :

a) surveiller le contenu d'oxygène des gaz de cheminée,
b) déterminer à partir de l'étape a) le débit d'air total ou une correction de celui-ci requise par ledit dispositif,
c) distribuer l'air aux systèmes d'alimentation d'air primaire (23) et secondaire de sorte que le débit d'air total soit maintenu selon l'étape b),
d) surveiller la température de chaque flux de gaz (A, B - figures 1, 3a, 3b),
e) déterminer le plus chaud des deux flux de gaz (97, 98),
f) augmenter le débit d'air secondaire à travers les gicleurs d'air secondaire (30, 31) situés au-dessous du plus chaud des deux flux de gaz, et diminuer le débit d'air secondaire dans les gicleurs situés au-dessous du plus froid des deux flux de gaz, de manière à maintenir dans l'ensemble le même débit d'air total dans le système d'air secondaire, et
g) ne pas changer le débit d'air secondaire si les deux flux de gaz ont la même température selon l'étape e), de manière à maintenir dans l'ensemble le même débit d'air total dans le système d'air secondaire.

2. Procédé selon la revendication 1 comprenant en outre les étapes consistant à :

h) diminuer le débit d'air primaire au-dessous des éléments de grille proximaux de la trémie d'alimentation avec poussoir (1), lorsque le plus chaud des deux flux de gaz déterminé à l'étape e) est situé proximal de la trémie d'alimentation avec poussoir, et augmenter le débit d'air pri-

maire dans la zone au-dessous du reste des éléments de grille, de manière à maintenir le même débit d'air total dans le système d'air primaire,
i) augmenter le débit d'air primaire au-dessous des éléments de grille proximaux de la trémie d'alimentation avec poussoir, lorsque le plus chaud des deux flux de gaz déterminé à l'étape e) est situé proximal du système de sortie, et diminuer le débit d'air primaire dans la zone au-dessous du reste des éléments de grille, de manière à maintenir le même débit d'air total dans le système d'air primaire,
j) ne pas changer le débit d'air primaire si les deux flux de gaz ont la même température selon l'étape e), de manière à maintenir le même débit d'air total dans le système d'air primaire.

3. Dispositif pour incinérer des matériaux solides comprenant :

- une trémie d'alimentation avec poussoir (1) capable d'introduire les matériaux solides dans un fourneau,
- une grille d'incinérateur (25) comprenant plusieurs éléments de grille,
- un fourneau (2) capable d'incinérer lesdits matériaux solides,
- une chambre de postcombustion (4) capable de brûler les gaz de cheminée produits résultant de ladite incinération,
- un système d'alimentation d'air principal (23) capable de distribuer différentiellement l'air à travers les différents éléments de grille et sur la largeur de la grille,
- un corps de déplacement (5) placé à la sortie de la chambre de combustion et à l'entrée de la chambre de postcombustion (4) capable de diviser le flot de gaz de cheminée produits en deux flux distincts de gaz de cheminée (A, B - figures 1, 3a, 3b),
- une courbe de la forme des parois intérieures avant et arrière du dispositif qui, avec le contour du corps de déplacement, crée l'entrée de la chambre de postcombustion,
- deux paires de rangées de gicleurs d'injection d'air secondaire (30, 31) situées immédiatement à la sortie de la chambre de combustion et à l'entrée de la chambre de postcombustion, une paire située sur la paroi intérieure avant de fourneau et sur la paroi de corps de déplacement opposée ; une autre paire située sur la paroi de intérieure arrière de fourneau et sur la paroi de corps de déplacement opposée,

ledit dispositif étant configuré pour :

a) surveiller le contenu d'oxygène des gaz de cheminée,
b) déterminer à partir de l'étape a) le débit d'air total ou une correction de celui-ci requise par ledit dispositif,
c) distribuer l'air aux systèmes d'alimentation d'air primaire (23) et secondaire de sorte que le débit d'air total soit maintenu selon l'étape b),
d) surveiller la température de chaque flux de gaz (A, B - figures 1, 3a, 3b),
e) déterminer le plus chaud des deux flux de gaz (97, 98),
f) augmenter le débit d'air secondaire à travers les gicleurs d'air secondaire (30, 31) situés au-dessous du plus chaud des deux flux de gaz, et diminuer le débit d'air secondaire dans les gicleurs situés au-dessous du plus froid des deux flux de gaz, de manière à maintenir dans l'ensemble le même débit d'air total dans le système d'air secondaire, et
g) ne pas changer le débit d'air secondaire si les deux flux de gaz ont la même température selon l'étape e), de manière à maintenir dans l'ensemble le même débit d'air total dans le système d'air secondaire.

4. Dispositif selon la revendication 3 en outre configuré pour :

h) diminuer le débit d'air primaire au-dessous des éléments de grille proximaux de la trémie d'alimentation avec poussoir (1), lorsque le plus chaud des deux flux de gaz déterminé à l'étape e) est situé proximal de la trémie d'alimentation avec poussoir, et augmenter le débit d'air primaire dans la zone au-dessous du reste des éléments de grille, de manière à maintenir le même débit d'air total dans le système d'air primaire,
i) augmenter le débit d'air primaire au-dessous des éléments de grille proximaux de la trémie d'alimentation avec poussoir, lorsque le plus chaud des deux flux de gaz déterminé à l'étape e) est situé proximal du système de sortie, et diminuer le débit d'air primaire dans la zone au-dessous du reste des éléments de grille, de manière à maintenir le même débit d'air total dans le système d'air primaire,
j) ne pas changer le débit d'air primaire si les deux flux de gaz ont la même température selon l'étape e), de manière à maintenir le même débit d'air total dans le système d'air primaire.

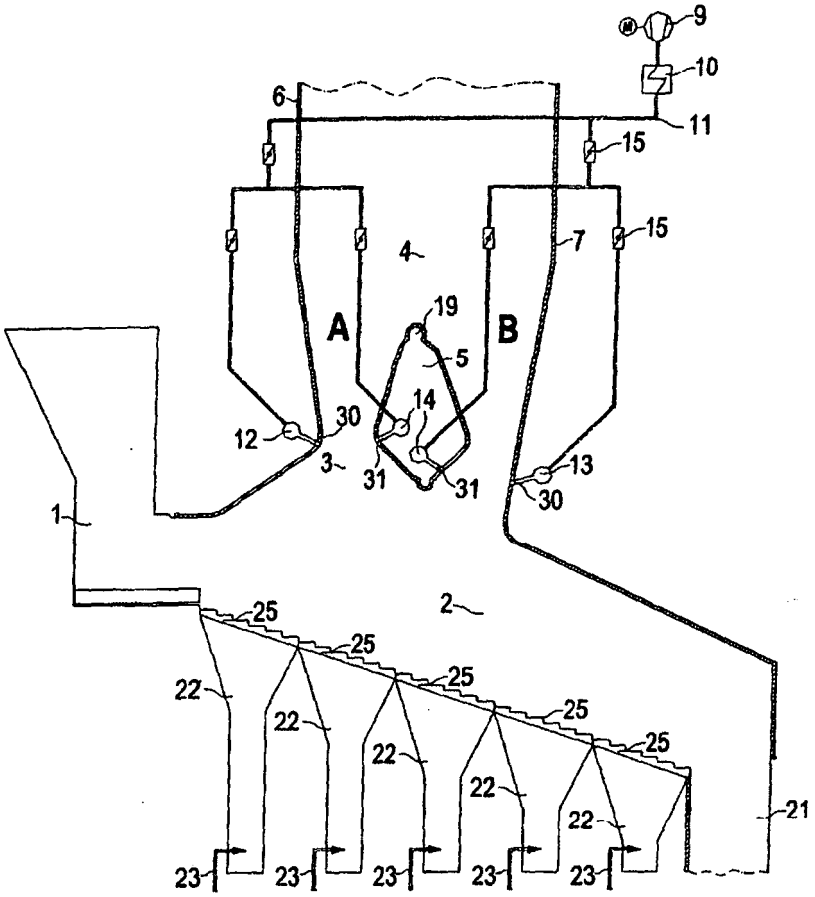
9
10
11
6
15
15
7
4
A
B
19
5
14
30
12
3
31
31
13
30
1
2
25
25
25
25
25
22
22
22
22
22
21
23
23
23
23
23

FIG. 1

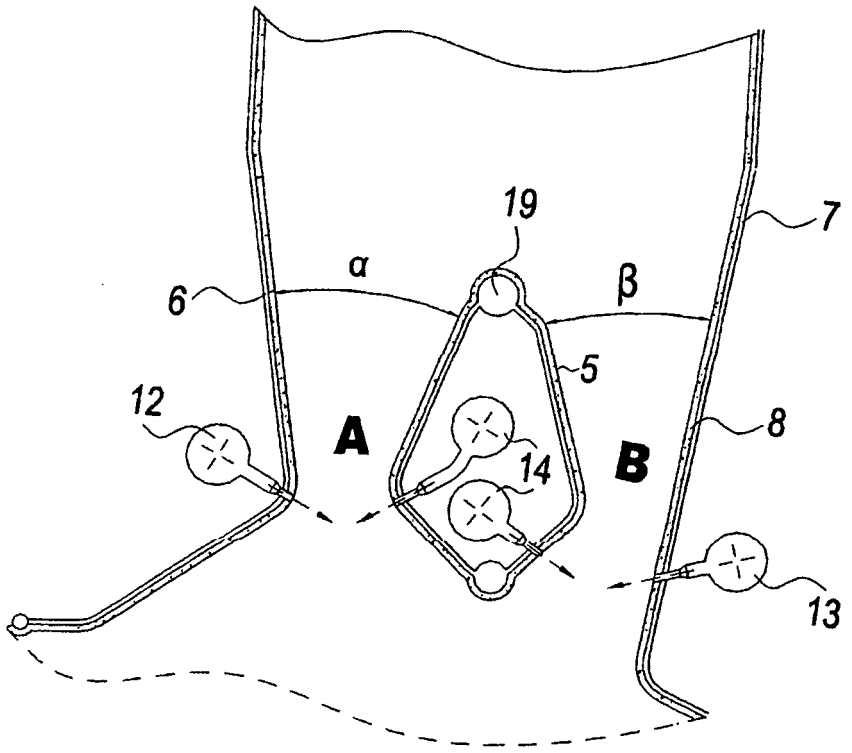

FIG. 2

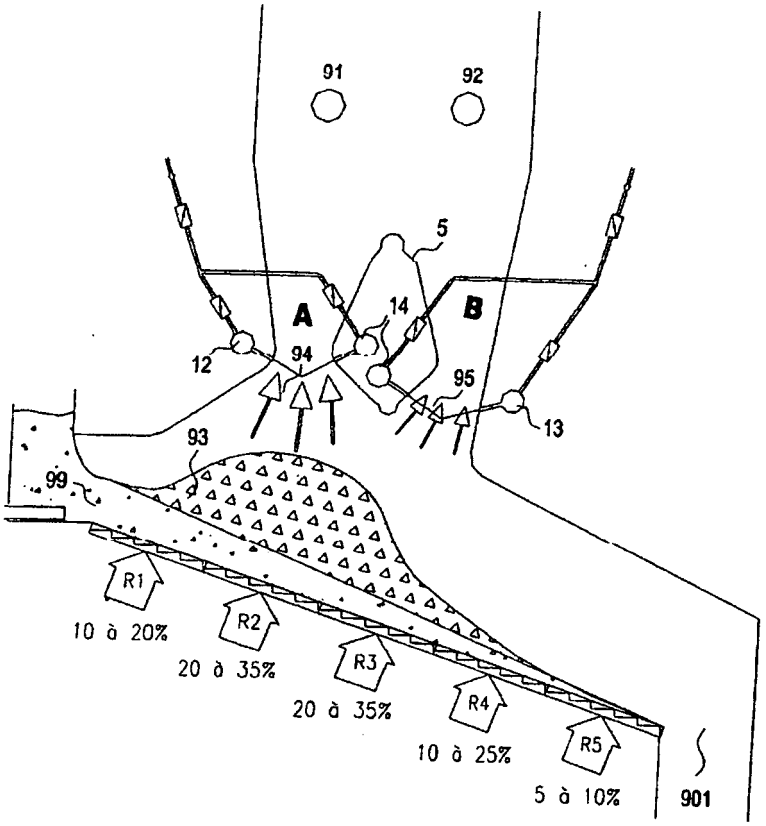
91
92
5
A
B
14
12
94
95
13
93
99
R1
10 à 20%
R2
20 à 35%
R3
20 à 35%
R4
10 à 25%
R5
5 à 10%
901

FIG. 3a

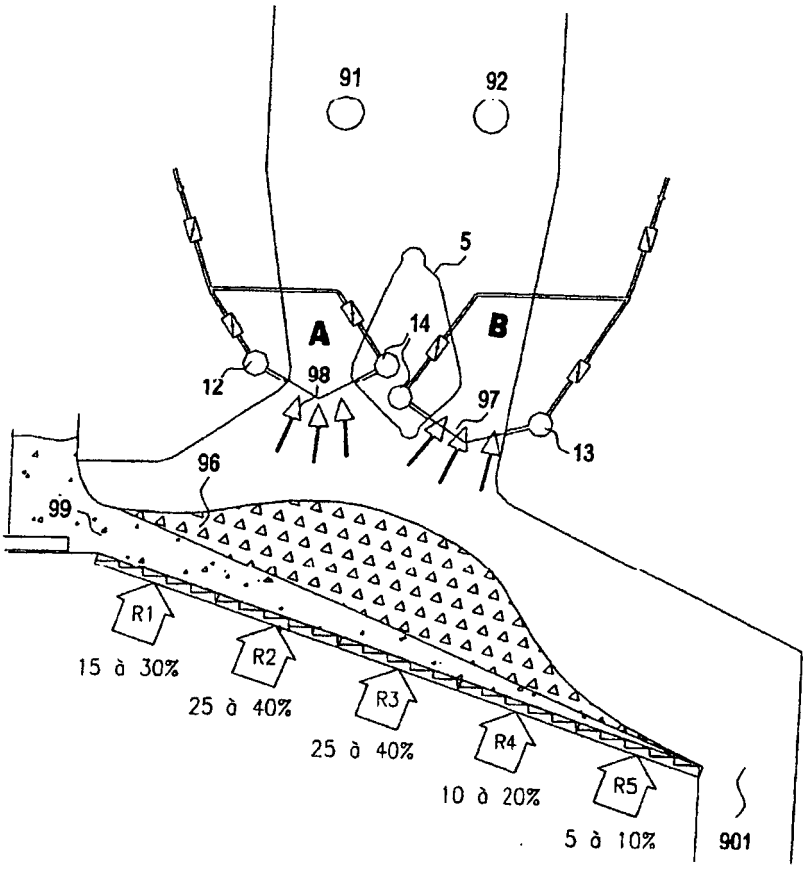
91
92
5
A
B
14
12
98
97
13
96
99
R1
15 à 30%
R2
25 à 40%
R3
25 à 40%
R4
10 à 20%
R5
5 à 10%
901

FIG. 3b

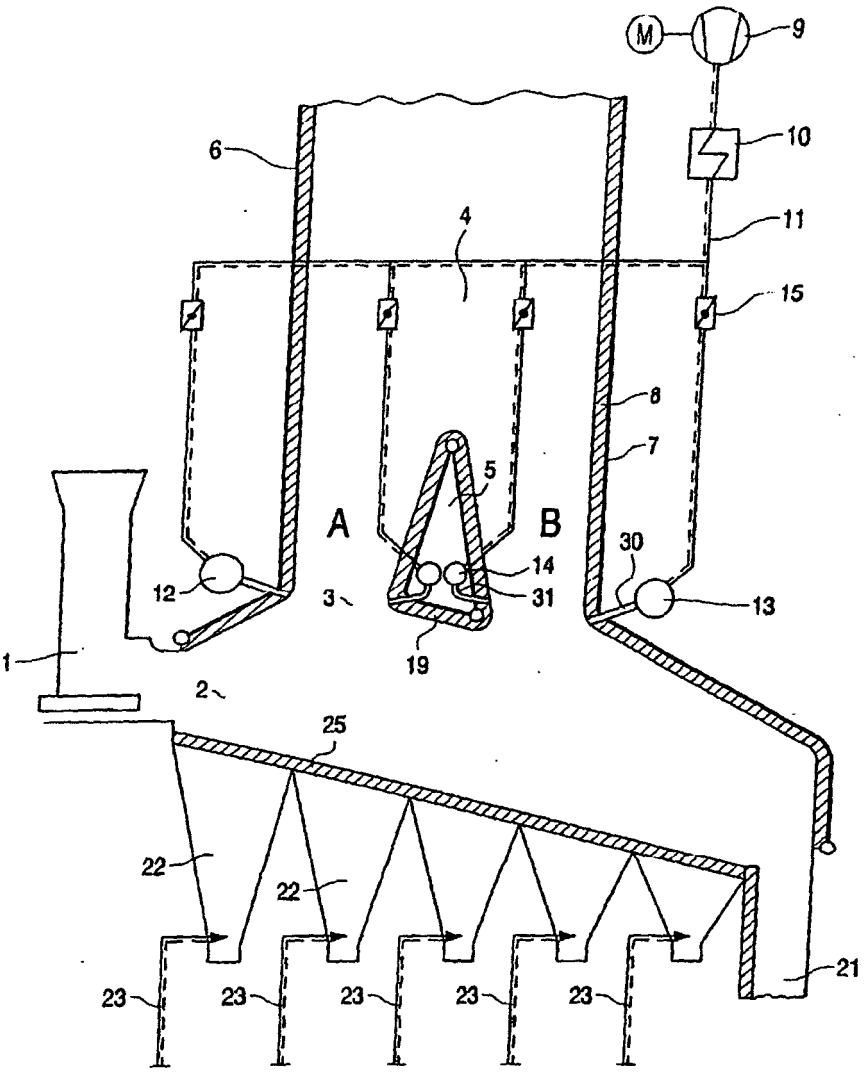

FIG. 4

REFERENCES CITED IN THE DESCRIPTION

This list of references cited by the applicant is for the reader's convenience only. It does not form part of the European patent document. Even though great care has been taken in compiling the references, errors or omissions cannot be excluded and the EPO disclaims all liability in this regard.

Patent documents cited in the description

- DE 4401821 **[0004]**