May 8, 1923. 1,454,396

W. W. MacDONALD

HYDRAULIC RAM CONTROL

Filed Sept. 7, 1920 5 Sheets-Sheet 1

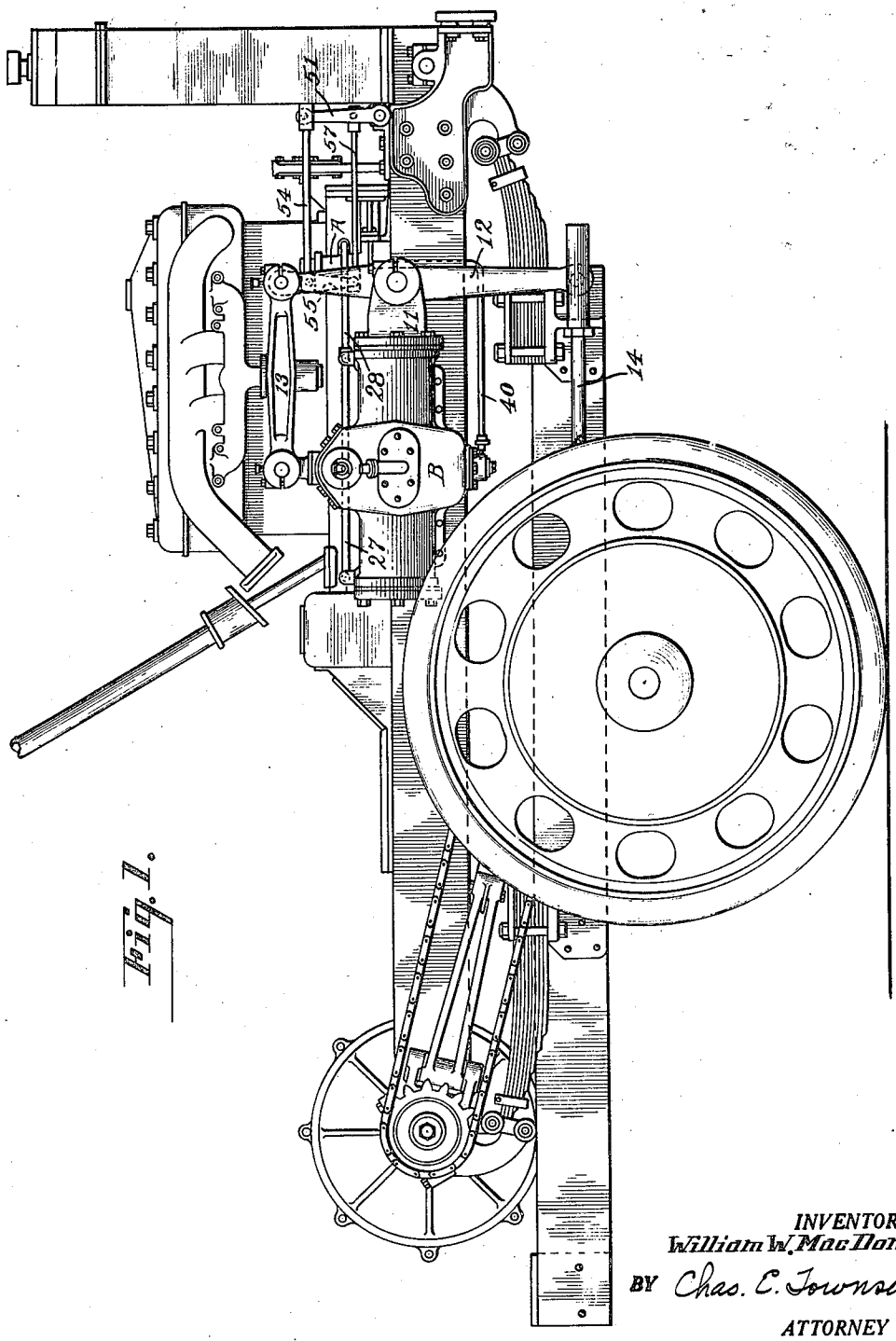

Fig. 1.

INVENTOR.
William W. MacDonald.
BY Chas. C. Townsend
ATTORNEY

May 8, 1923.

1,454,396

W. W. MacDONALD

HYDRAULIC RAM CONTROL

Filed Sept. 7, 1920

5 Sheets-Sheet 2

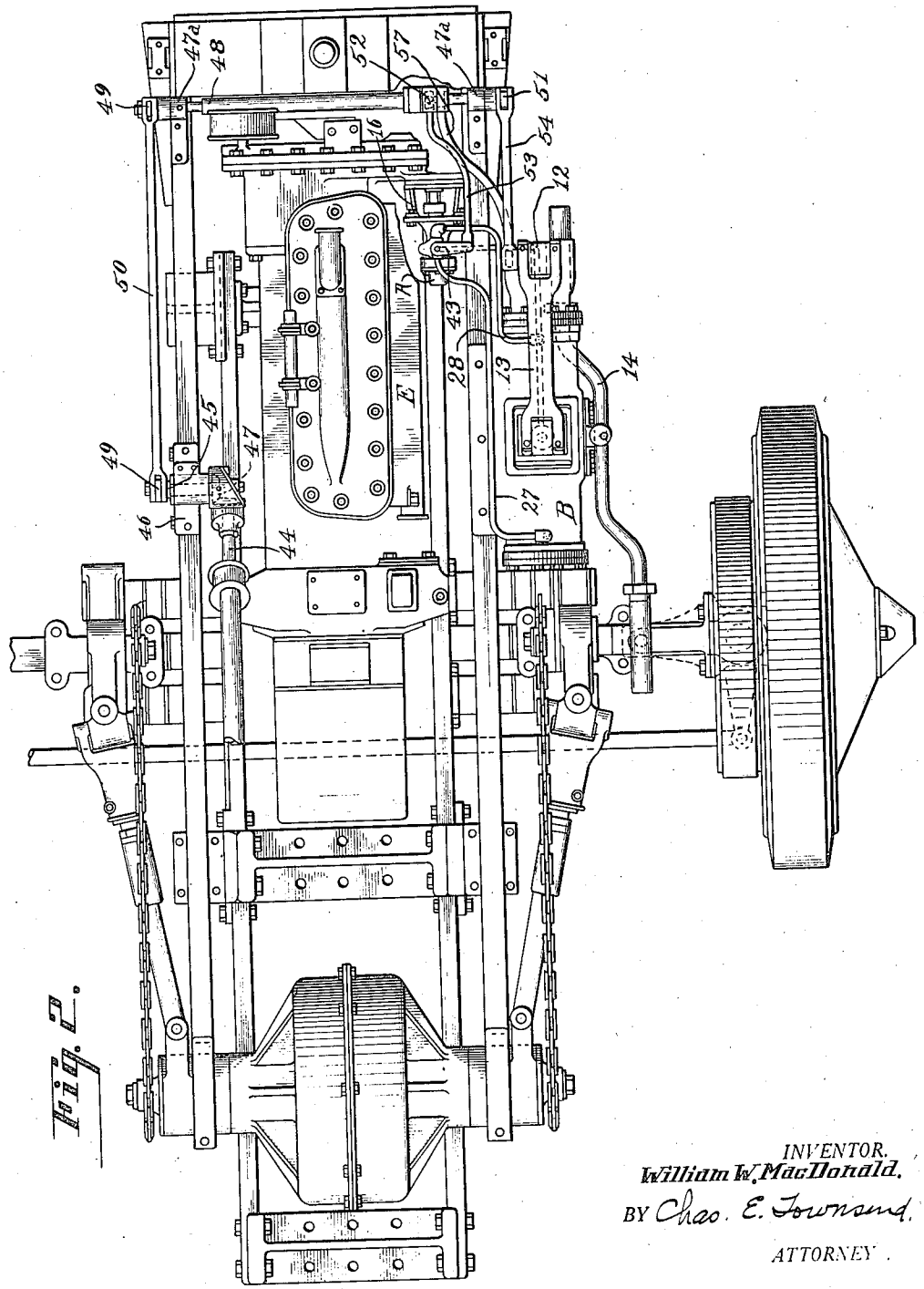

Fig. 2.

INVENTOR.
William W. MacDonald.
BY Chas. E. Townsend.
ATTORNEY.

May 8, 1923.

1,454,396

W. W. MacDONALD

HYDRAULIC RAM CONTROL

Filed Sept. 7, 1920

5 Sheets-Sheet 3

Fig. 5.

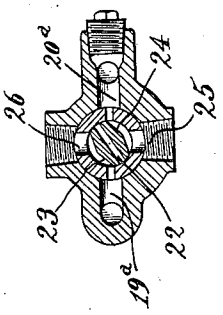

Fig. 4.

Fig. 7.

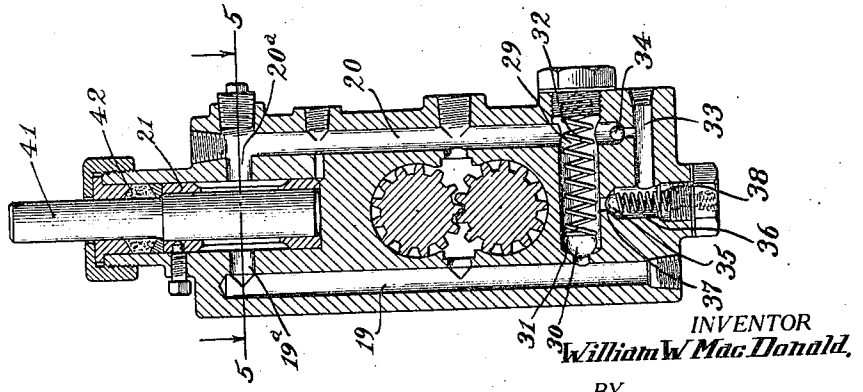

INVENTOR

William W MacDonald.

BY

Chas. E. Townsend

ATTORNEY

May 8, 1923.

1,454,396

W. W. MacDONALD

HYDRAULIC RAM CONTROL

Filed Sept. 7, 1920

5 Sheets-Sheet 4

Fig. 6.

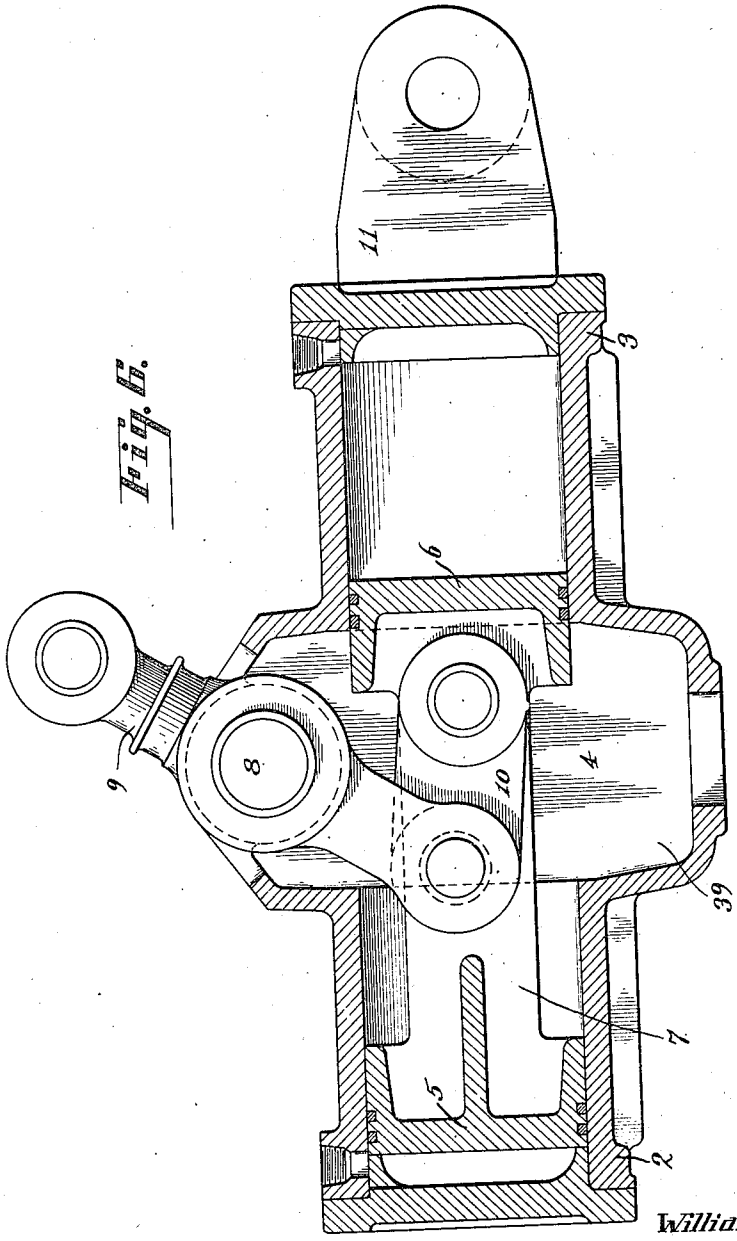

INVENTOR
William W. MacDonald.

BY
Chas. E. Foorman

ATTORNEY

May 8, 1923.

1,454,396

W. W. MacDONALD

HYDRAULIC RAM CONTROL

Filed Sept. 7, 1920

5 Sheets-Sheet 5

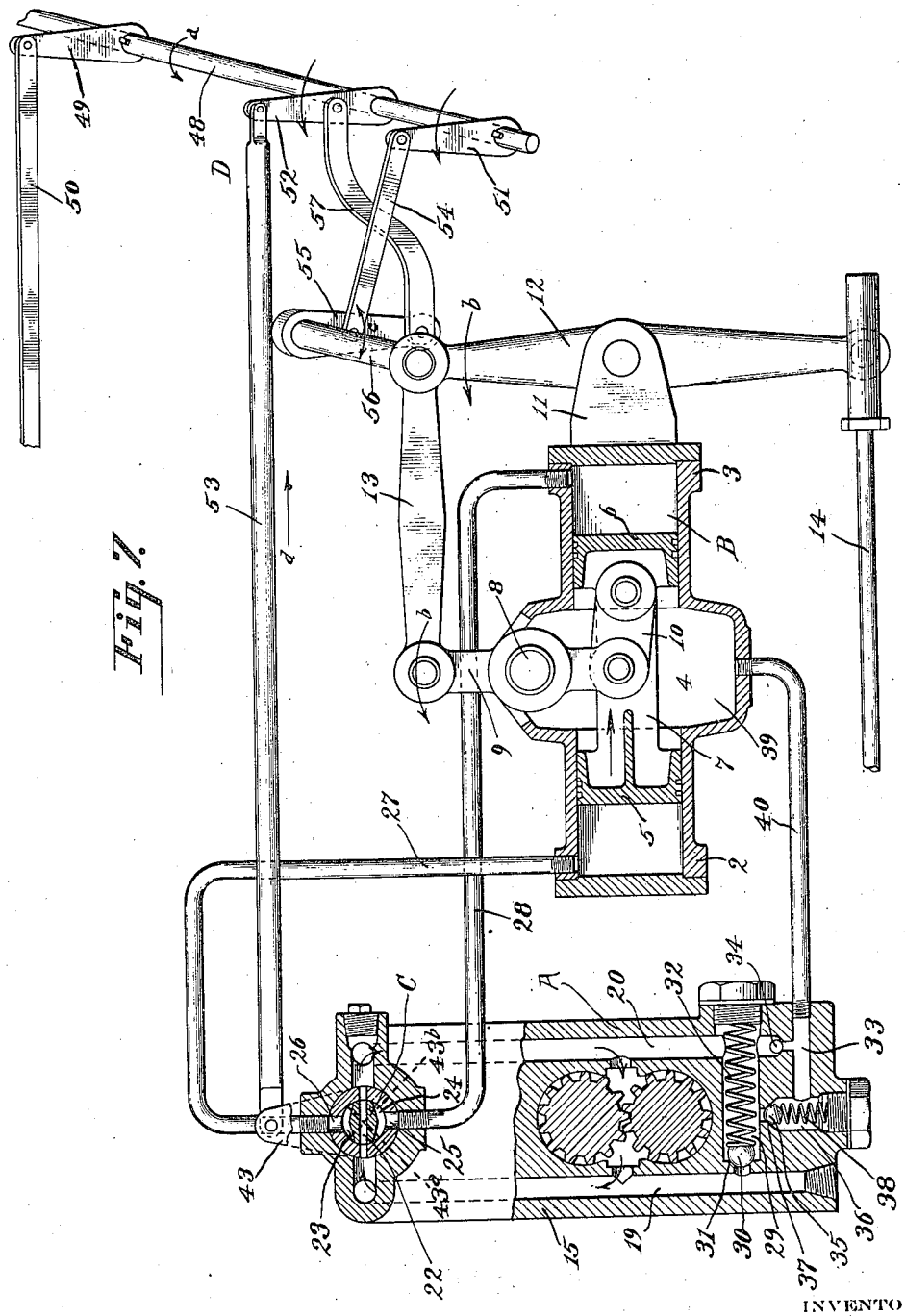

Fig. 7.

INVENTOR
William W. MacDonald.

BY Chas. E. Townsend

ATTORNEY

Patented May 8, 1923. 1,454,396

UNITED STATES PATENT OFFICE.

WILLIAM W. MacDONALD, OF SAN FRANCISCO, CALIFORNIA.

HYDRAULIC-RAM CONTROL.

Application filed September 7, 1920. Serial No. 408,533.

To all whom it may concern:

Be it known that I, WILLIAM W. MacDONALD, a citizen of the United States, residing at the city and county of San Francisco and State of California, have invented a new and useful Improvement in Hydraulic-Ram Controls, of which the following is a specification.

This invention relates to hydraulic ram actuating and controlling mechanism and especially to improvements on the structure and general arrangement of mechanism shown in my copending application entitled "Hydraulic ram control", filed September 3, 1919, Serial No. 321,493.

One of the objects of the present invention is to provide a simple substantial hydraulic ram actuating and controlling mechanism or device of this character which will render the mechanism generally applicable for varying uses; further to provide a device of this character which is responsive, sensitive and quick in action and in which back lash or lost movement is entirely eliminated.

Another object of the invention is to provide a novel pump and valve arrangement whereby a liquid may be maintained under constant circulation and pressure and either circulated through the pump and valve or directed to actuate the ram.

Another object of the invention is to provide a structure which permits automatic building up or increase of liquid pressure as the load on the ram increases and which will automatically unload or reduce the pressure when the load is removed; further to provide means for automatically relieving the pressure when a predetermined maximum is reached, and conversely preventing reduction of pressure below a predetermined minimum when the load is removed.

Another object of the invention is to provide a controlling valve of simple design which does not require hydraulic balancing and which is capable of almost instantaneously diverting the flow of the liquid to the point required; further to provide means for manually turning the valve to divert the flow to one end of the ram or the other, and in conjunction therewith means for automatically returning the valve to normal position when the manual turning means is released and when so returned sealing the liquid in the ram cylinder which prevents any movement of the piston in either direction.

Another object of the invention is to provide means for automatically priming and replacing liquid lost by leakage whether in the ram, valve or pump, and for simultaneously liberating air which might collect under certain conditions.

Further objects will hereinafter appear.

The invention consists of the parts and the construction, combination and arrangement of parts as hereinafter more fully described and claimed, having reference to the accompanying drawings, in which:

Fig. 1 is a side elevation of the front end of a truck showing the application of the invention.

Fig. 2 is a plan view of the same.

Fig. 3 is a central vertical section on line 3—3, Fig. 4.

Fig. 4 is a central vertical longitudinal section through the pump and the valve.

Fig. 5 is a plan section on line 5—5, Fig. 3.

Fig. 6 is a central vertical longitudinal section through the hydraulic ram.

Fig. 7 is a diagrammatic view of the ram, the pump, the valve, the pipe connections employed through which the fluid is circulated, and the means whereby the valve is manually and automatically turned.

For the convenience of illustration and explanation I have in the present instance shown my hydraulic ram control as connected with the steering gear of a truck, yet it must be understood that I do not confine my present invention to a use in combination with the steering mechanism as the device is capable of many applications and uses.

The device as a whole, in which my improved apparatus is employed, consists briefly of a continuously operating rotary pump A, a hydraulic ram B, a controlling valve C, and means for manually and automatically turning the valve; said means being generally illustrated at D. (See Fig. 7). The ram proper consists of a cylinder which is divided into two sections 2 and 3 by means of a central crank case 4. Reciprocally mounted in the cylinder is a piston which is divided into two opposed sections 5 and 6, by means of a central connecting rod 7. Journalled in the upper end of the crank case, as at 8, is a rocker arm 9 and connecting said rocker arm with the pistons 5 and

6 is a link 10. Pivotally mounted on one end of the cylinder in a bracket 11 is a second rocker arm 12 and connecting said rocker arm with the first named rocker arm 9 is a link 13. The lower end of the rocker arm 12 is connected by means of a drag link 14 with the steering knuckles of the truck generally shown in Figs. 1 and 2; this steering mechanism being of conventional design as illustrated. The ram proper serves the function of actuating the steering mechanism of the truck, which consists of steering knuckles, tie rods, etc., and the ram proper is in turn actuated by the fluid delivered thereto under pressure, as will hereinafter be described.

For the purpose of delivering fluid to the respective ends of the cylinder B, indicated by the numerals 2 and 3, I have provided a gear pump A. This pump is driven from the engine shaft of the motor E by which the truck proper is operated and it is therefore maintained in continuous operation as long as the engine is running. The gear pump is mounted in a housing 15 which also serves as a housing for the regulating valve C; the whole unit, comprising the pump and valve, being supported by a bracket 16 suitably attached to the gear case of the engine as shown in Fig. 2. One of the gears of the pump is secured on a shaft 17, on the outer end of which is secured a pinion 18. This pinion intermeshes with one of the gears in the gear case and power is thereby transmitted to operate the gear pump. The housing inclosing the gears and the valve is provided with two vertically disposed passages 19 and 20, the passage 20 being known as the suction passage, and the passage 19 as the discharge passage. The valve proper is positioned directly above the gears between the passages 19 and 20 and it is so constructed that the liquid handled by the pump may be circulated directly through the valve when this assumes a normal position.

The valve employed is of the plug type and is journalled in a bushing 21 secured in the housing. A central passage 22 is formed in the valve which normally aligns with lateral passages 19^a and 20^a. The sides of the valve are cut away as at 23 and 24, which provides means for diverting the flow of liquid through a pair of passages 25 and 26 formed in the casing at right angles to the cross passages 19^a and 20^a. The passage 26 is connected by means of a pipe 27 with that end of the ram cylinder indicated at 2, while the passage 25 is connected by a pipe 28 with the opposite end of the cylinder indicated at 3. Both pipes serve as combination discharge and return pipes, that is liquid under pressure may be delivered through the pipes to either end of the cylinder or may conversely serve the function as return pipes to deliver the liquid to the suction side of the pump

Formed in the lower part of the casing is a cross passage 29, this passage forms a communication between the suction and the discharge passages 19 and 20 and is provided with a safety or pressure regulating valve 30 which is held against a seat 31 by means of a spring 32. The housing is also provided with a lower passage 33 with which the suction passage 20 communicates as shown in Figs. 3 and 7. A ball check valve is placed in this passage, as indicated at 34, and a second ball check valve is provided, as indicated at 35; this valve being placed in a passage 36 which communicates with the suction passage 20 through the cross passage 29. The passage 36 also communicates with the lower passage 33. The check valve 35 is held against a seat 37 by means of a spring 38. This valve will hereinafter be referred to as the unloading valve.

The passage 33 performs two functions, first that of a priming passage as it is connected by means of a pipe 40 with an oil reservoir 39 formed in the bottom portion of the crank case of the ram. Secondly it serves as a discharge passage when the unloading valve 35 operates as will later be described.

The valve C is provided with a stem 41 which projects through a stuffing box 42 formed on the upper end of the housing. This stem is provided with a turning lever 43, said lever being manually and automatically actuated. Manual operation or turning movement of the valve is transmitted from an ordinary steering wheel positioned adjacent the driver's seat not here shown. The steering wheel is secured to a shaft 44, the lower end of which terminates adjacent a shaft 45 journalled in a bearing member 46 secured on the main frame of the vehicle. A pair of bevel gears 47 connects the shafts so that turning movement of the steering wheel shaft 44 will be transmitted to the shaft 45. Journalled in bearing members 47^a secured on the forward end of the frame is a cross shaft 48. Secured on the respective shafts 45 and 48 is a pair of crank arms 49 and connecting said crank arms is a link 50 through which turning movement is transmitted. Secured on the opposite end of shaft 48 is a crank arm 51 and freely turnable on the shaft intermediate the crank arms 49 and 51 is a floating crank arm 52. This arm is connected by means of a link 53 with the valve lever 43, while a crank arm 51 is connected by means of a link 54 with a floating crank 55 turnably mounted on a shaft 56 carried by the upper end of the rocker arm 12. The shaft 56 is journaled in a suitable bearing in the upper end of the rocker arm 12 and it forms the pivotal connection between the said rocker arm 12 and the link 13. The link 13 is bifurcated, as clearly shown in Figure 2 of the drawing,

to straddle the upper end of the rocker arm 12 and the arm 55 is arranged at the inner side of the link 13. The said shaft 56 passes through the bifurcated end of the link 13 and the upper end of the rocker arm 12 and also through the floating crank arm 55 and connects the said parts. A third link is provided, as indicated at 57. This link is attached to the outer end of the floating crank 55 and to the inner end of the floating crank 52.

The operation of the device is substantially as follows: If it is desired to turn the wheels of the truck in one direction, it is only necessary to turn the steering wheel secured on the shaft 44 in that direction. This movement is transmitted to the shaft 48 through means of the gears 47, the cranks 49 and the link 50. It is in turn transmitted to the valve lever 43 by means of the crank arm 51, the link 54, the floating cranks 55 and 52, and the links 57 and 53.

For the purposes of illustration, we will assume that turning movement is transmitted to the shaft 48 in the direction of arrow *a*. This will cause the crank arm 51 to move in the direction of the arrow indicated in Fig. 7, the link 54 and the floating crank 55 in the same direction and will similarly cause the floating crank 52, together with the links 53 and 57 to move in the same direction, thereby turning the valve through means of the lever 43 to the dotted line position indicated at 43^a. If the engine E is running, it will be obvious that the gear pump will be operating and that oil will be continuously circulating through the gears of the pump, the passages 19 and 20 and the valve in the direction indicated by the arrows. (See Fig. 7). The moment the valve is turned to the dotted line position 43^a, it will be obvious that the oil from the discharge passage 19 will pass through the side passage 23 in the valve or that the flow of liquid will be diverted outwardly through the passage 26 and the pipe 27, thus causing the liquid to enter that end of the ram cylinder indicated at 2. This liquid is under pressure and it will therefore exert sufficient pressure on the piston 5 to move it in the direction of the arrow. Any liquid contained in the opposite end of the cylinder or that indicated at 3 will discharge through the pipe 28 and will enter the casing containing the valve and pump, through the passage 25. It will here be directed by the side passage 24 in the valve to the suction passage 20 and will thus be returned to the pump.

We will now assume that the front wheels of the truck are running in a rut and that considerable power will be required to turn the same. If this is the case it is obvious that the pressure on the liquid delivered to the ram cylinder will have to be increased, such increase is automatically taken care of by the pump as the liquid employed (oil) is not compressible and is continuously entering the pump through the suction passage 20. The pressure will thus rapidly build up on the discharge line and the movement of the piston will take place the moment a sufficient pressure is reached. This movement of the piston is of course transmitted through the link 10 to swing the rocker arms 9 and 12 through the medium of the link 13 and it is again transmitted to the steering knuckles through the drag link 14. Turning movement of the steering wheel in the first place caused manual opening or turning movement of the valve C. This valve is automatically returned to normal position the moment the piston has moved a predetermined distance, this being due to the fact that the rocker arms 9 and 12 will swing in the direction of arrows *b* when the piston travels in the direction of the arrow as shown. The floating crank 55, which is carried by the rocker arm 12 will travel with said arm, but its free end will simultaneously swing in the direction of arrow *c* as it is attached to the shaft 48 by means of the crank arm 51 and the link 54. This swinging movement will therefore be transmitted through the link 57 to the floating crank 52 and a reverse movement will thus be transmitted thereto which will exert a pull on the link 53 in the direction of arrow *d*; this reverse movement being sufficient to turn the valve to normal position as shown in Fig. 7. (By normal position is meant the position which the valve assumes when the cross passage 22 formed therein aligns with the suction and discharge passages 20 and 19 as circulation through the pump will then be established and the liquid running in the lines and ram cylinder locked or sealed, thus preventing movement of the piston in either direction.)

From the foregoing it can be seen that the valve is manually turned to direct the oil either to one end of the cylinder or the other, the oil under pressure discharging from the pump being directed to that end of the cylinder indicated at 2 when the valve assumes the turned position indicated by the dotted line 43^a and to the opposite end of the cylinder when the valve assumes the dotted line position indicated at 43^b; further that movement of the piston whether in one direction or the other is transmitted through he several links shown to automatically return the valve to normal position; this automatic return of the valve being quite an essential feature as the front wheels would otherwise be turned to an extreme angle unless close attention is constantly given by the driver. It would furthermore necessitate the manual operation of the valve in both instances, while the mechanism here

shown merely requires manual operation in one direction and automatic return in the opposite direction.

As stated a little previously in the specification, it seems to happen that more pressure is required in a hydraulic ram under certain conditions than under other conditions. The pressure built up on the discharge side of the pump will therefore vary. For instance it might only require eighty pounds pressure to move the piston of the ram when travelling on a comparatively smooth road and it might require as much as five hundred pounds pressure to move the piston of the ram when travelling over rough ground, and particularly if the wheels should be travelling in a deep rut. It is therefore quite essential that liquid under varying pressures may be delivered to the rain and it is also essential that the system be relieved of such pressure the moment it is not required. It should also be obvious that a maximum limit should be maintained as far as the production of pressure is concerned as bursting of pipes, excess leakage, etc., might otherwise take place. It is therefore essential that means be provided for limiting the pressure produced on the discharge side of the pump and that means are provided for unloading the pressure produced when not required. This is accomplished in the following manner:

If during certain condition a pressure is built up on the discharge side which approximates five hundred pounds and this is the maximum limit desired, it is only necessary to adjust the spring 32 so that the safety valve 30 will open when this pressure is obtained. In other words, it will be impossible to establish a pressure beyond five hundred pounds as any excess pressure produced will open the valve 30, thus permitting liquid to escape into the lateral passage 29 where it will be dissipated by entering the suction side of the pump or passage 20. The unloading of the pressure established during the operation of the ram is accomplished when the valve C is returned to normal position. The liquid under pressure will the moment the valve is returned to normal position escape through the cross passage in the valve and will thus enter the suction passage 20 and the cross passage 29. It will here dissipate itself by opening the check valve 35 which is termed the unloading valve, and will finally escape through the passage 33 and the pipe 40 which communicates with the source of supply 39. Any pressure imposed on the system as a whole is thereby automatically relieved whenever the valve is turned to normal position and excess strains or unnecessary leakage is thereby reduced to a minimum.

Another important feature which materially affects the successful and efficient operation of the apparatus as a whole is the provision of means for maintaining a predetermined minimum pressure both on the suction line and on the discharge line. This pressure under normal conditions approximates ten pounds gauge pressure and is regulated by adjusting the spring 38 whereby the unloading valve is held against its seat. In other words the unloading valve will permit liquid to escape or return to the source of supply 39 through pipe 40 the moment a pressure in excess of ten pounds is imposed upon the suction line, and it will of course automatically close the moment this pressure is reached, thus maintaining a constant minimum pressure on the whole system. Such pressure, as previously stated, materially affects the successful operation of the apparatus or system inasmuch as it serves three important functions: first that of preventing back lash of the piston in the ram, secondly that of maintaining the system fully charged and primed with liquid, and third that of expelling any air which might form or otherwise collect in the different passages through which the liquid is circulated.

Having thus described my invention, what I claim and desire to secure by Letters Patent is—

1. The combination with a hydraulic ram comprising a cylinder and a piston dividing the cylinder into two chambers, of a source of liquid supply, a pump having a suction and a discharge connection adapted to maintain the liquid in constant circulation, means for diverting the flow of the liquid to either cylinder chamber, said means also adapted to maintain a returned circulation through the pump, means preventing building up of pressure on the discharge side of the pump beyond a predetermined pressure, and means for maintaining a minimum predetermined pressure on the suction side of the pump.

2. The combination with a hydraulic ram comprising a cylinder and a piston dividing the cylinder into two chambers, of a pump, a valve connected with the suction and the discharge side of the pump and normally adapted to maintain communication between the suction and discharge side of the pump to permit constant circulation of the liquid through the valve and pump, a pipe connecting the valve with one end of the cylinder, a second pipe connecting the valve with the opposite end of the cylinder, manually operated means for turning the valve so that the liquid may be diverted through one of the pipes to one end of the cylinder and simultaneously returned from the opposite end of the cylinder to the suction side of the pump, and mechanism connected with the piston and with the valve and actuated by the piston for returning the valve automatically to its normal position closed to the

cylinder and open to the suction and discharge sides of the pump.

3. The combination with a hydraulic ram comprising a cylinder and a piston dividing the cylinder into two chambers, of a pump, a valve connected with the suction and the discharge side of the pump and normally adapted to maintain communication between the suction and discharge side of the pump to permit constant circulation of the liquid through the valve and pump, a pipe connecting the valve with one end of the cylinder, a second pipe connecting the valve with the opposite end of the cylinder, means for limiting the building up of pressure on the discharge side of the pump and means for maintaining a minimum predetermined pressure on the suction side of the pump.

4. In a device of the character described a casing, a pump therein, a suction and a discharge passage formed in the casing and respectively connected with the suction and discharge side of the pump, a valve turnably mounted in the casing and adapted to form communication between the suction and discharge passages, a second pair of combined inlet and discharge passages formed in the casing through either of which connection may be established with the suction or discharge side of the pump through the valve, a source of liquid supply connected with the suction side of the pump, a check valve in said connection, a cross passage formed in the casing connecting the suction and discharge passages, a safety valve in said passage limiting the pressure which may be built up on the discharge side of the pump, and a pressure unloading valve interposed between the suction passage and the source of liquid supply.

5. The combination with the cylinder of a hydraulic ram and a piston reciprocally mounted in the cylinder and dividing the cylinder into two chambers, of a continuously operated pump adapted to maintain a body of liquid in constant circulation, a valve casing interposed between the pump and the cylinder of the ram, a pair of ports formed in said casing, one communicating with the discharge side of the pump, and one communicating with the suction side of the pump, a second pair of ports formed in the casing, one communicating with one end of the ram cylinder and the other with the opposite end of the ram cylinder, a valve turnably mounted in the casing adapted to form a communication between the discharge and the suction side of the pump to permit a continuous circulation of the liquid through the pump and the valve, said valve also adapted to be turned so as to form a communication between the discharge side of the pump and either end of the cylinder and between the suction side of the pump and either end of the cylinder, manually actuated means connected with the valve for turning the same, and automatically actuated means for returning the valve to the position assumed before manual turning thereof.

6. The combination with cylinder of a hydraulic ram and a piston reciprocally mounted in the cylinder and dividing the cylinder into two chambers, of a continuously operated pump adapted to maintain a body of liquid in constant circulation, a valve casing interposed between the pump and the cylinder of the ram, a pair of ports formed in said casing, one communicating with the discharge side of the pump, and one communicating with the suction side of the pump, a second pair of ports formed in the casing one communicating with one end of the ram cylinder and the other with the opposite side of the ram cylinder, a valve turnably mounted in the casing adapted to form a communication between the discharge and the suction side of the pump to permit a continuous circulation of the liquid through the pump and the valve, said valve also adapted to be turned so as to form a communication between the discharge side of the pump and either end of the cylinder and between the suction side of the pump and enther end of the cylinder, manually actuated means connected with the valve for turning the same, automatically actuated means for returning the valve to the position assumed before manual turning thereof, means permitting building up of pressure on the discharge side of the pump, said means also functioning as a safety valve to limit the pressure, and automatically functioning means for unloading pressure built up on the discharge side of the pump.

7. The combination with the cylinder of a hydraulic ram and a piston reciprocally mounted in the cylinder and dividing the cylinder into two chambers, of a continuously operated pump adapted to maintain a body of liquid in constant circulation, a valve casing interposed between the pump and the cylinder of the ram, a pair of ports formed in said casing, one communicating with the discharge side of the pump, and one communicating with the suction side of the pump, a second pair of ports formed in the casing one communicating with one end of the ram cylinder and the other with the opposite side of the ram cylinder, a valve turnably mounted in the casing adapted to form a communication between the discharge and the suction side of the pump to permit a continuous circulation of the liquid through the pump and the valve, said valve also adapted to be turned so as to form a communication between the discharge side of the pump and either end of the cylinder and between the suction side of the pump

and either end of the cylinder, manually actuated means connected with the valve for turning the same, automatic actuated means for returning the valve to the position assumed before manual turning thereof, means permitting building up of pressure on the discharge side of the pump, said means also functioning as a safety valve to limit the pressure, automatically functioning means for unloading pressure built up on the discharge side of the pump, said means being only operable when the valve is turned to form communication between the suction and discharge side of the pump.

8. In a device of the character described, in combination a hydraulic ram, a pump having means for the circulation of a fluid within it, and a valve connecting the pump with the ram for controlling the latter, manually operable means for turning the valve to assume predetermined positions, and mechanism connected with the valve and with the piston of the ram and actuated by the ram after each manual operation of the valve for automatically returning the valve to a neutral position for circulating fluid through the pump and for holding the ram against movement.

9. In a device of the character described the combination with a hydraulic ram and the valve controlling the same, of a pair of pivotally mounted rocker arms adapted to be actuated by the ram, a floating crank pivotally mounted on one of said rocker arms, a shaft, a floating crank freely turnably on the shaft, a link connection between the first named and last named floating cranks, a link connection between the last named floating crank and an operating lever on the valve, a crank arm rigidly secured on the shaft, a link connection between said crank arm and the first named floating crank, and manually operated means for transmitting a turning movement to the shaft.

10. In a device of the character described the combination with a hydraulic ram including a cylinder and a piston mounted therein, of a pivotally mounted rocker arm to which movement is transmitted through means of a piston, a second pivotally mounted rocker arm, a link connection between said rocker arms, a floating crank turnably mounted on the last named rocker arm, a shaft, a floating crank turnably mounted on the shaft, a link connection between the floating cranks, said link being pivotally attached to the outer end of the first named crank, a crank arm secured on the shaft, a link connection between said crank arm and the first named floating crank, said link being pivotally attached to the inner end of said floating crank and to the outer end of the fixed crank, manually actuated means for transmitting a turning movement to the shaft, a controlling valve regulating the fluid flow to the ram, an operating lever on said valve, and a link connection between said operating lever and the floating crank arm turnably mounted on the shaft.

In testimony whereof I have hereunto set my hand in the presence of two subscribing witnesses.

WILLIAM W. MacDONALD.

Witnesses:
JOHN H. HERRING,
W. W. HEALEY.