Oct. 10, 1939. P. W. KERR 2,175,717

COMPARTMENT

Filed Aug. 12, 1937 3 Sheets-Sheet 1

Fig. 1

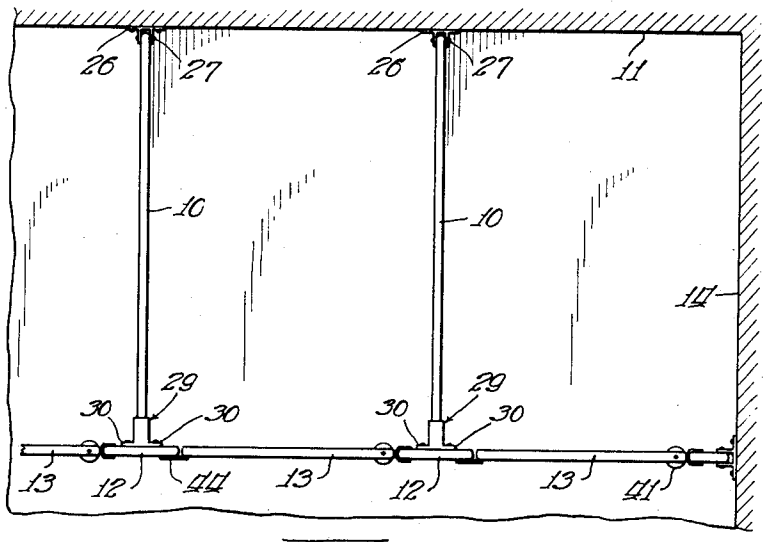

Fig. 2

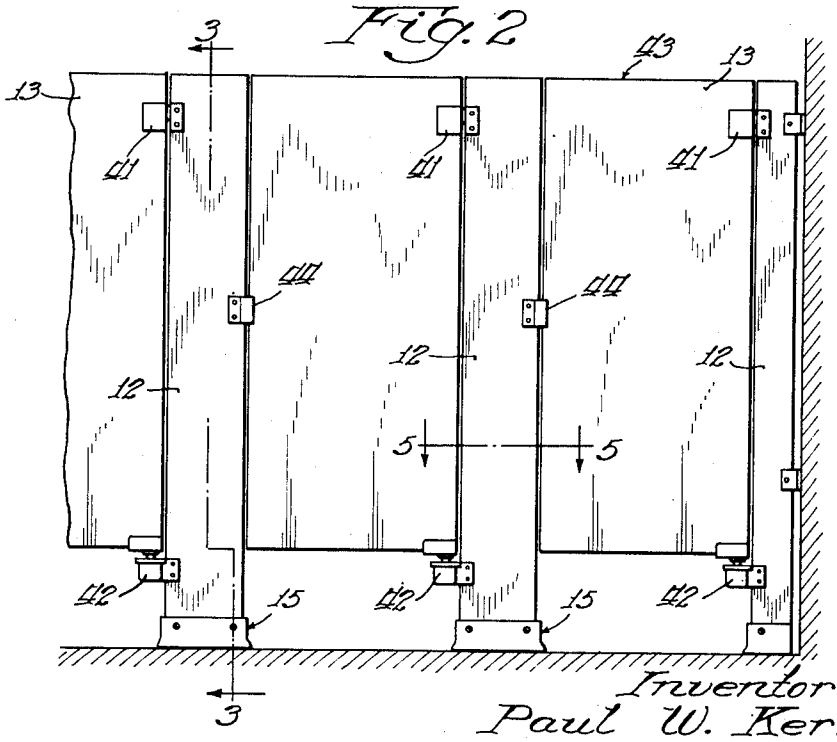

Inventor:
Paul W. Kerr
By: Roland C. Rehm
Atty.

Oct. 10, 1939. P. W. KERR 2,175,717

COMPARTMENT

Filed Aug. 12, 1937 3 Sheets-Sheet 2

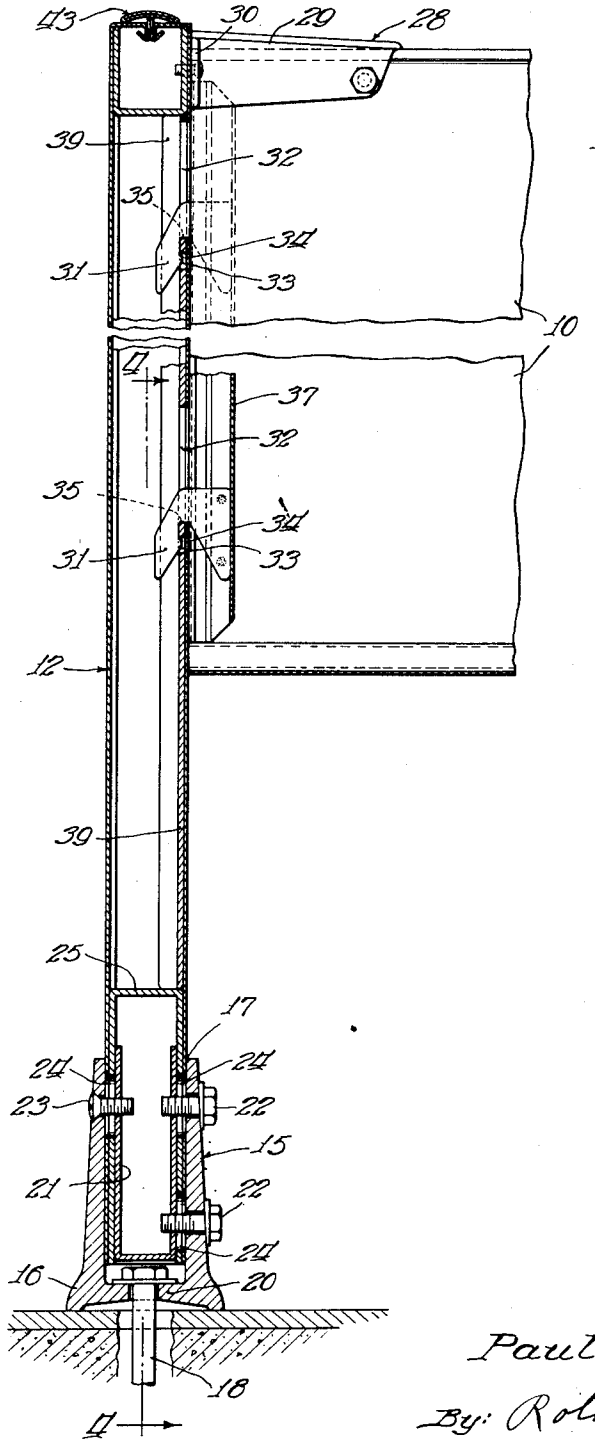

Fig. 3

Inventor:
Paul W. Kerr
By: Roland C. Rehm
Atty.

Oct. 10, 1939. P. W. KERR 2,175,717

COMPARTMENT

Filed Aug. 12, 1937 3 Sheets-Sheet 3

Fig. 5

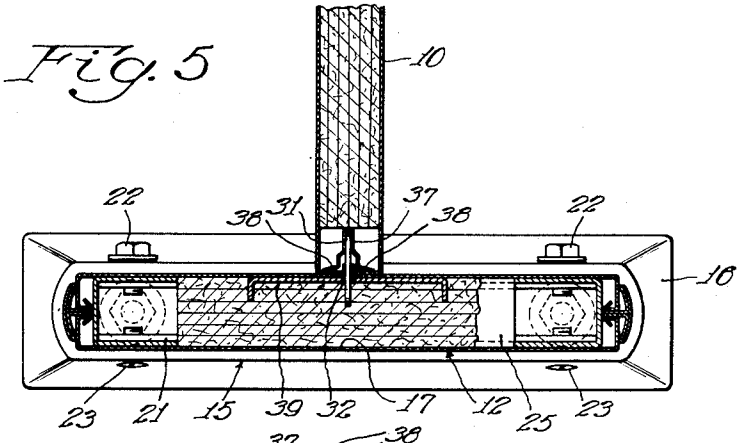

Fig. 4

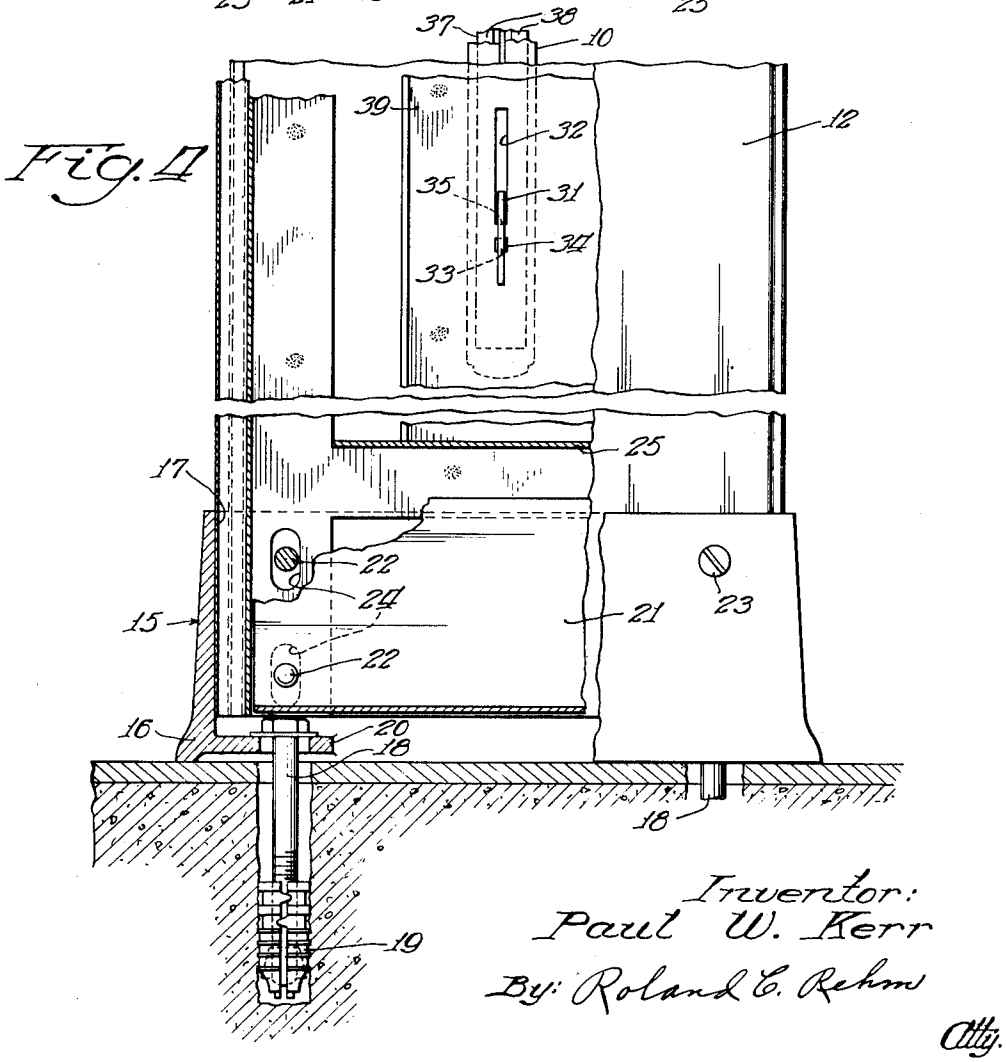

Inventor:
Paul W. Kerr
By: Roland C. Rehm
Atty.

Patented Oct. 10, 1939

2,175,717

UNITED STATES PATENT OFFICE

2,175,717

COMPARTMENT

Paul W. Kerr, Elkhart, Ind., assignor to Henry Weis Manufacturing Company, Inc., Elkhart, Ind., a corporation of Indiana

Application August 12, 1937, Serial No. 158,725

5 Claims. (Cl. 189—34)

This invention relates to toilet, dressing room, cubicle and other compartments, and among other objects aims to provide a metal construction of improved appearance which possesses the desired rigidity and stability for modern construction.

The nature of the invention may be readily understood by reference to one illustrative construction embodying the invention and shown in the accompanying drawings.

In said drawings:

Fig. 1 is a plan view of a battery of compartments;

Fig. 2 is a front elevation thereof;

Fig. 3 is a vertical section through an anchoring device and stile taken on the plane 3—3 of Fig. 2;

Fig. 4 is a vertical section taken on the plane 4—4 of Fig. 3; and

Fig. 5 is a plan section taken on the plane 5—5 of Fig. 2.

Compartments of this character are characterized by enclosures formed with partition panels, stiles and doors which terminate short of the ceiling and generally short of the floor. Heretofore, it has been the practice to stabilize or anchor the tops of the partitions and stiles by a superstructure which extends to the ceiling or by head rails which extend horizontally (above the doors and stiles) continuously from end to end of the structure. In modern design, it is desirable to eliminate all head rails and superstructure, but heretofore it has not been possible practically to provide sufficient durability and rigidity to render the compartments architecturally acceptable. Attempts have been made to employ vitreous or marble partitions without head rails or superstructure in the expectation that the weight of the panels would provide rigidity and stability, but this has been largely an illusion.

The present construction embodies for the first time a metal compartment conforming to modern design and possessing the requisite characteristics of durability and rigidity, and eliminating the defects and objections inherent in vitreous and marble compartments.

The invention is here shown illustrated in a battery of compartments formed by panels 10 connected to and extending outwardly (generally in parallel relationship) from a wall 11 of the building. The outer ends of the panels are connected to and supported by stiles 12 between which swing doors 13 supported by the respective stiles. The battery of compartments may extend from one side wall 14 to the other, but this is not necessary since one or both ends of the battery of compartments may be formed by a panel construction similar to the dividing partitions between compartments.

The compartments are not stabilized or supported, as will be noted from Fig. 2, by any superstructure or head rails. Support therefore is derived entirely from the stiles and the connection of the panels to the wall 11.

As will presently appear in greater detail, the stiles are able to resist the very considerable stresses imposed thereon, either directly or by forces exerted on the panels, by anchoring devices which hold the stiles in a fixed position determined at the time of assembly and erection of the compartment. Since the upper ends of the stiles are free or unsupported, the stresses imposed thereon must be practically entirely assumed by the aforesaid anchoring devices. While the panels themselves may be securely attached to the wall, the leverage at the outer end of the panel is obviously so great that despite the supporting assistance given by the wall connection, the panels require the support of the stiles to develop the necessary rigidity or immobility. However, by reason of the metal construction of the panels, they are able to assume stresses which could not be imposed upon marble or similar panels without the danger of breakage. Indeed marble or vitreous panels would break at the holes provided for attachment of the anchorages if subjected to the forces generally imposed on structures of this type. Their brittleness or lack of elasticity causes stresses to be transmitted to and concentrated upon vulnerable points.

The anchoring devices 15 are here shown provided with a base 16 and a socket 17 of such shape as to receive the lower end of the stile with a fairly snug fit. It is unnecessary in erection of the compartments to provide special sockets or the like in the floor at predetermined points. The floor may be finished without reference to the location of the anchoring devices and the latter attached thereto by bolts 18 and conventional expansion anchors 19 which are placed in holes subsequently drilled in the floor at the exact points where it is desired to locate the anchoring device. The bolt heads or nuts seat against the transverse web 20 in the base of the anchoring device to hold the latter firmly against the floor. The holes in the web are preferably made a little larger than the stud bolts to permit some lateral adjustment of the anchoring device 15.

The stiles here shown are composite in character comprising double sheet metal walls of the same general character as those of the panels 10. The interiors of both stiles and panels preferably are filled with light weight material in the form of fibrous sheets to give the effect of solidity and to eliminate drumming noises. The lower ends of the stiles have a fairly snug fit in the sockets of the anchoring devices and are preferably provided with substantial filler pieces 21 which in this instance are U-shaped in character. The latter are preferably threaded to receive attaching bolts 22 and screws 23 which pass through holes in the sides of the sockets of the anchoring devices. The bolts when tightened clamp the sheet metal faces of the stile firmly between the inner faces of the socket and the filler piece 21. Preferably the stiles are slotted as at 24 to permit vertical adjustment for purposes presently explained. A spacer member 25 inside the stiles assists in maintaining the spacing of the light gauge side walls at the lower end where the filling material has been omitted for mechanical reasons.

As here shown, a round-headed screw 23 is employed on the outer face of the anchor member since it is less conspicuous than the headed bolts 22 which are employed on the inner face of the anchor where they are not readily observed.

The panels 10 are connected to the wall 11 by brackets 26 which embrace the edges of the panels and are connected thereto by bolts 27. The brackets 26 are anchored or otherwise appropriately attached to the wall 11. The outer ends of the panels are rigidly connected to the stiles by bracing members 28 here shown in the form of caps 29 fitting over the upper edges of the panel and provided with integral laterally extending flanges 30 bolted or otherwise attached to the inner face of the stiles on opposite sides of the panel. The bracing member may advantageously be in the form of a casting of substantial strength which holds the stile against twisting or substantial movement relative to the panel.

In addition, the panels and stiles are connected by hook members 31 projecting from the edge of the panel and hooked into slots 32 in the face of the stiles (see Fig. 3). If desired, the hooks may be provided with projections 33 which enter openings 34 in the stiles after the hooks have been moved downwardly into engagement with the bottom 35 of the slots 32. The inner ends of the hooks are advantageously anchored in the panels by a channel 37 formed to embrace the hooks and in which they are connected by spot welding or in any other appropriate way. The flanges 38 of the channel are resilient and normally engage the inner edge of the panels at an angle to provide spring tension which causes the edges of the panels to press against the faces of the stiles. The inner faces of the stiles carry a reinforcing channel member 39 in the region of attachment of the panels. The connection is here illustrated at the center line of the stiles but it will be understood that if desired for special constructions the center line of the stile may be offset to one side or the other of the partition panel.

The doors 13 are hinged to the stiles by upper and lower hinges 41 and 42. Preferably the upper hinge 41 does not project above the upper line 43 of the door or stiles, so as to satisfy one object of the design illustrated, namely, minimizing or elimination of projections above the top lines of the doors and stiles.

A door stop 44 is carried by the opposite stile, in this instance to prevent the door from swinging outwardly beyond the plane of the compartments.

In assembling the compartments, the stiles are vertically adjusted in their sockets to align their upper edges and to compensate for the slight inclination which usually occurs in the floor. The stiles and the sockets may thus be designed independently of the particular position which they are to occupy or of the inclination of the floor upon which the sockets are to rest. It is possible by means of the sockets and the anchor bolts by which they are secured to the floor, to hold the stiles much more firmly than is possible with the conventional mounting of marble or vitreous stiles. The latter are seated in a recess which must be formed in the floor and each stile and its mounting in the recess require special treatment, being incapable of and unsuited for vertical adjustment. Nevertheless, this mounting is incapable of holding the stiles and partition panels with adequate firmness and has not proved acceptable without head rails or similar devices for holding the upper ends of the stiles. Indeed the brittleness or lack of elasticity of materials of this character precludes any method of assembly which might result in concentration of stresses in one region.

The present construction, on the other hand, makes it possible to anchor and support the stiles, panels and doors rigidly against displacement under the extreme stresses to which compartments of this character are subjected, without the use of head rails or other superstructure and without incurring risk of breakage of the stiles or panels under such stresses. Special provision in the floor for the base sockets is not required, the floor being laid without regard to the location of the base sockets thereon. Thus no difficulty arises out of the inevitable lack of accuracy where provision for anchoring the stiles must be made when the floor is laid.

Obviously the invention is not limited to the details of the illustrative construction since these may be variously modified. Moreover it is not indispensable that all features of the invention be used conjointly since various features can be used to advantage in different combinations and sub-combinations.

Having described my invention, I claim:

1. In a metal compartment, a stile base connection comprising in combination a base slotted to receive floor anchor bolts, a socket member carried by said base, a relatively wide sheet metal stile closely fitting in said socket but vertically slidable therein, said stile having a pair of vertically extending laterally spaced slots in its wide face, bolts extending from said socket member through said slots, a clamping member on the interior of said stile into which said bolts are threaded and adapted to cooperate in clamping said stile against lateral displacement of its upper end, the top of said stile being unconnected with any supporting structure.

2. A metal compartment of the character described comprising in combination a floor fitting anchored to the floor on which the compartment is installed and having a stile socket therein, a stile seated in and closely fitting said socket, the top of said stile being unconnected with any overhead support, clamping means for clamping said stile in said socket in vertically adjusted position and against lateral movement, a metal panel terminating short of the floor and ceiling, and a

connecting member having a cap fitting over the upper edge of said panel and having laterally extending wings bolted to the said stile on opposite sides of said panel.

3. A metal compartment of the character described comprising in combination a floor fitting anchored to the floor on which the compartment is installed and having a stile socket associated therewith, a laterally wide sheet metal stile having its lower end adjustably seated in and enclosed by said socket, said fitting having a plurality of laterally spaced means for clamping said stile at a plurality of laterally spaced points to hold the latter firmly against lateral movement in its vertically adjusted position, said means permitting vertical adjustment of said stile, the top of said stile being free of overhead supporting structure, a door hinged to said stile, a metal panel terminating short of the floor and ceiling, means for rigidly connecting said panel to the inner face of said stile to prevent relative movement between stile and panel, and means for supporting the opposite edge of said panel.

4. A metal compartment of the character described comprising in combination a floor fitting adapted to be anchored to the floor on which the compartment is to be installed and having a stile socket therein, a laterally wide metal stile of rectangular shape and uniform width throughout its entire height having its lower end portion seated in said socket, means rigidly securing said lower end portion in said socket to hold said end portion rigid with relation to said floor whereby lateral tilting stresses imposed on the stile above said lower end portion are absorbed by the inherent resiliency of the metal of the stile, a door hinged to a side of said stile, a metal panel cooperating with said floor fitting to support the stile and constituting the sole additional support therefor, means for rigidly connecting said panel to the inner face of said stile to prevent relative movement between stile and panel, and means for supporting the opposite edge of said panel.

5. A battery of metal compartments of the character described comprising in combination a plurality of floor fittings anchored in mutually spaced relation to the floor on which the compartments are installed and each fitting having a stile socket associated therewith, a plurality of mutually independent and unconnected laterally wide sheet metal stiles each being of rectangular shape and uniform width throughout its entire height having its lower end portion adjustably seated in one of said sockets, said stiles terminating short of the ceiling and being free of overhead supporting structure, means rigidly securing each lower end portion to its fitting at a plurality of laterally spaced points to hold said end portion rigid with relation to said floor whereby lateral tilting stresses imposed on the stile above said lower end portion are absorbed by the inherent resiliency of the metal of the stile, said means permitting the securing of the stile in vertically adjusted position, a door hinged to a side of each stile, a plurality of metal panels cooperating with said floor fittings to support the stiles and constituting the sole additional support for the stiles, means rigidly connecting an edge of one of said panels to each of said stiles to prevent relative movement between the stiles and the panels, and means for supporting the opposite edges of the panels.

PAUL W. KERR.