(No Model.) 3 Sheets—Sheet 1.

# J. TAYLOR.

## CAR TRUCK.

No. 455,990. Patented July 14, 1891.

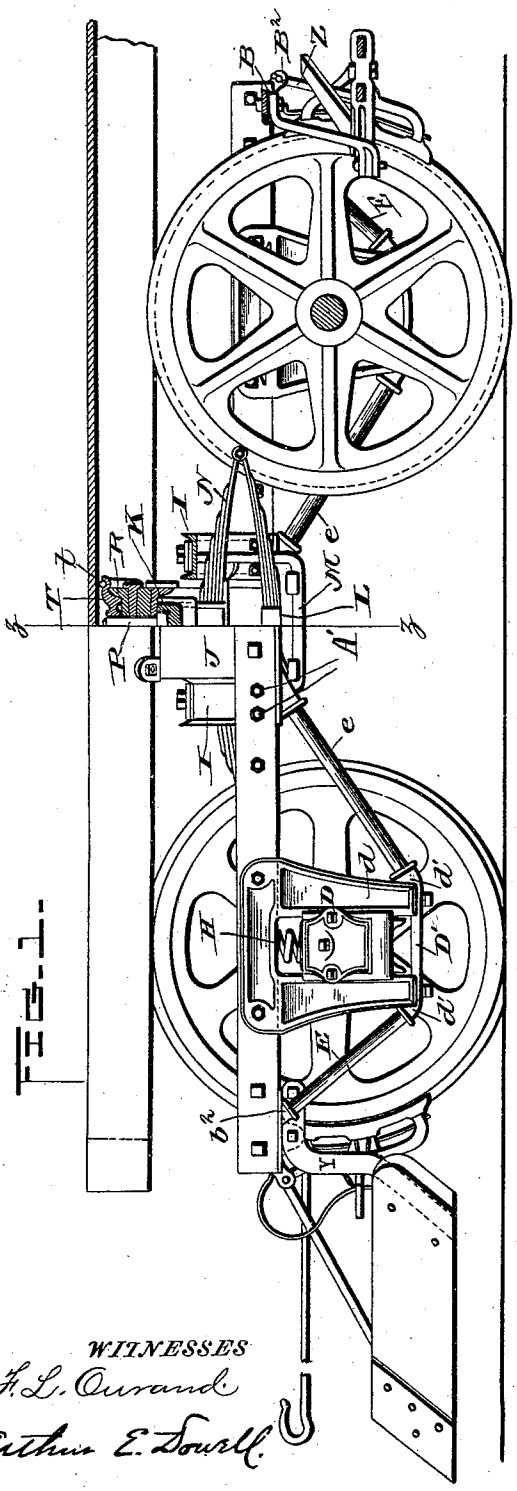

FIG. 1.

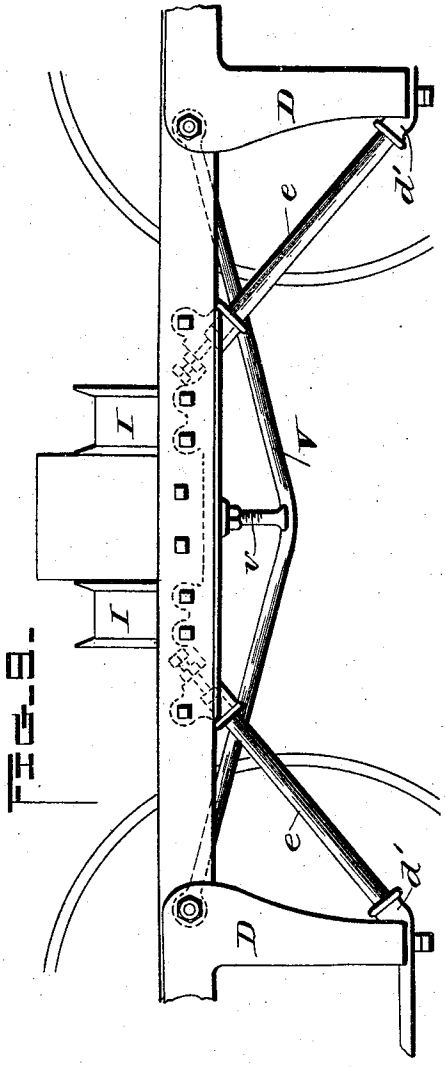

FIG. 2.

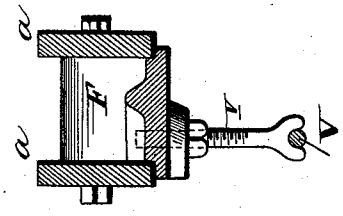

FIG. 3.

WITNESSES

F. L. Ourand.

Arthur E. Dowell.

INVENTOR

John Taylor

per T. H. Alexander

Attorney

THE NORRIS PETERS CO., PHOTO-LITHO., WASHINGTON, D. C.

(No Model.) 3 Sheets—Sheet 2.

# J. TAYLOR.

## CAR TRUCK.

No. 455,990. Patented July 14, 1891.

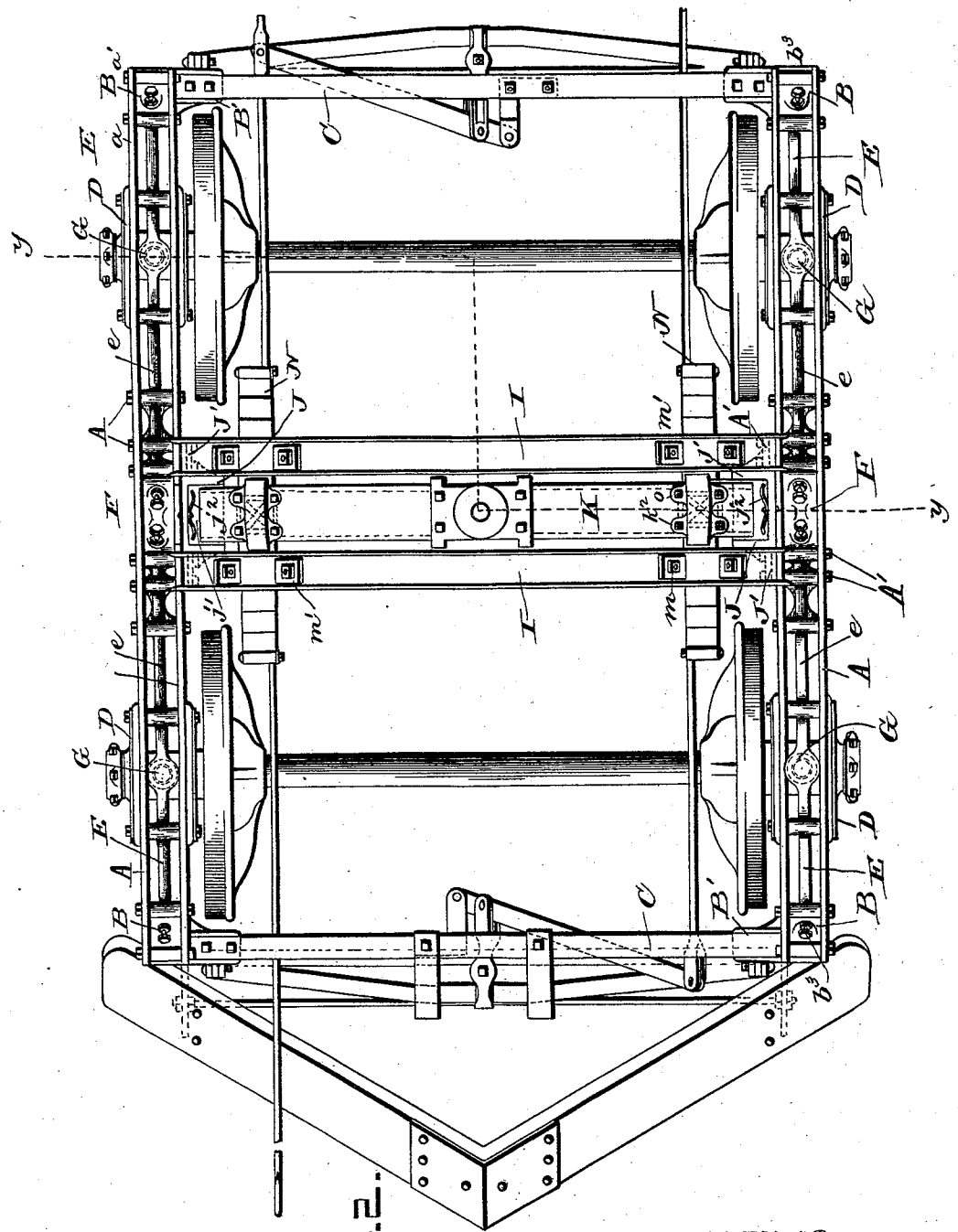

FIG. 2.

WITNESSES
F. L. Ourand
Arthur E. Towell

INVENTOR
John Taylor
per T. W. Alexander
Attorney

THE NORRIS PETERS CO., PHOTO-LITHO., WASHINGTON, D. C.

(No Model.) 3 Sheets—Sheet 3.

# J. TAYLOR.

## CAR TRUCK.

No. 455,990. Patented July 14, 1891.

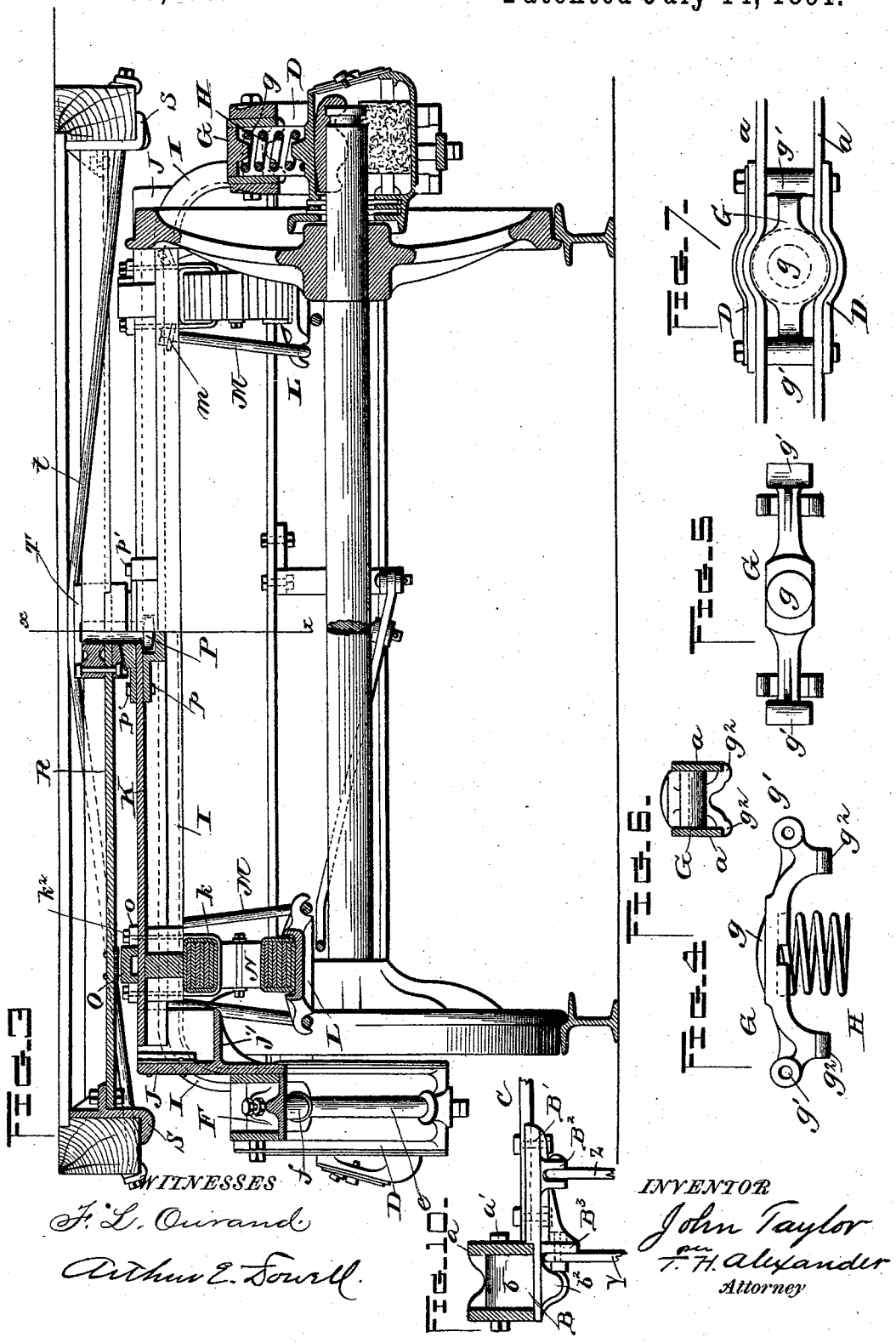

WITNESSES

F. L. Ourand

Arthur E. Fowell.

INVENTOR

John Taylor

per F. H. Alexander

Attorney

THE NORRIS PETERS CO., PHOTO-LITHO., WASHINGTON, D. C.

# UNITED STATES PATENT OFFICE.

JOHN TAYLOR, OF TROY, NEW YORK.

## CAR-TRUCK.

SPECIFICATION forming part of Letters Patent No. 455,990, dated July 14, 1891.

Application filed November 28, 1890. Serial No. 372,919. (No model.)

*To all whom it may concern:*

Be it known that I, JOHN TAYLOR, of Troy, in the county of Rensselaer and State of New York, have invented certain new and useful Improvements in Car-Trucks; and I do hereby declare that the following is a full, clear, and exact description thereof, reference being had to the accompanying drawings, and to the letters of reference marked thereon, which form part of this specification, in which—

Figure 1 is a half side elevation and half sectional view of my improved car-truck, the line of section being indicated by line *z z*. Fig. 2 is a plan view thereof. Fig. 3 is a double central transverse vertical sectional view thereof on line *y y*, Fig. 2, the respective part sections being distinguished by line *x x*. Figs. 4, 5, 6, and 7 are detail views of the castings G. Figs. 8 and 9 are details of a center brace. Fig. 10 is a detail view of a lower casting B.

This invention is an improvement in car-trucks; and its objects are to produce a truck having an open center between the wheels, and strong, simple in construction, and easy riding; and to these ends it consists in the novel construction and combination of parts hereinafter clearly described and claimed.

Referring to the drawings by letter, A A designate the side beams of the truck, which are preferably composed of parallel bars *a a*, set edgewise and united by transverse bolts, which pass through sleeves or castings interposed between the bars *a*, as shown.

B B designate the castings secured between the bars at the ends of the beams. These end castings have a vertical portion *b*, which is laterally perforated for the reception of bolts *a'*, which secure them to the bars, and they depend below the beams somewhat and have lateral inwardly-projecting extensions B', which are flanged on the upper side edges to receive ends of bars C C, that constitute the ends of the truck and unite the side beams, as shown. On the lower side of extension B' is a pair of depending perforated ears $B^2$, between which the brake-suspending link Z is hung, and a depending perforated transverse flange $B^3$, to which is bolted the upper end of the fender-supporting iron Y. The portion *b* has a depending socket portion $b^2$, which inclines inwardly toward the journal-box casting, but is closed at top.

$b^3$ is a tap-bolt through portion *b*, entering the bore of the socket. The journal-box castings D are bolted to the side beams near the ends thereof, as shown, and the lower ends of the jaws *d* of the castings are connected by a transverse bar D'. On the outer sides and lower ends of jaws *d* are formed upwardly-inclined sockets *d'*, in which are set the lower ends of inclined braces E *e*. The upper ends of outer braces E are engaged in sockets $b^2$ of castings B, while the upper ends of inner braces *e* are engaged in similar but oppositely-inclined sockets *f*, formed in castings F, that are secured between the members of the beams, as shown, about centrally between box-castings D. By this construction the ends and centers of beams are strongly braced from boxes. The castings F are formed with transverse sleeves, through which pass bolts uniting bars *a*.

G designates castings having a central cap portion *g* and opposite sleeves *g'*, united to the cap by lateral webs, and from the webs thereof depend lugs $g^2$, which are lipped under the side bars of the beams, as shown in Fig. 6, to relieve shearing strain on the bolts, which secure the castings to the members of the beams between the members of the journal-box castings and above the journal-boxes, and coiled springs H are interposed between the boxes and caps *g*, thereby supporting the frame on the axles, as indicated. In detail Fig. 7 this cap is enlarged and bars *a* bent accordingly to accommodate springs of greater diameter.

I I designate a pair of channel-bars that are secured to the side beams about centrally and transversely of the frame. The ends of said bars are bent downwardly, as indicated, so that the bodies thereof are above the plane of the frame.

J J designate metallic castings attached to the side beams between the ends of bars I I and rising slightly above said bars. These castings J are provided at bottom with laterally-projecting flanges J', which overreach the ends of bars I, and A' A' are bolts transfixing flanges J', ends of bars I, the beams and the castings J, as indicated, and when

properly nutted bind all said parts securely together. The upper portion of casting J is formed with inwardly-projecting flanges $j$ and bottom or shelf $j'$ to receive and guide the ends of a bolster K, and $j^2$ are springs secured to the casting to relieve the shock of impact of the bolster thereagainst.

L L represent stirrup-blocks suspended from bars I by hangers M M near the sides of the truck, the upper ends of which irons pass through openings in bars I and are secured by nuts $m$, and washers $m'$ are interposed between the nuts and bars. The stirrup-blocks depend barely below the beams.

N N designate springs supported on the stirrup-blocks below bars I and transversely thereto, and on these springs is supported the bolster K, which lies transversely of the truck between and above bars I. The bolster is secured to the springs by clip-irons $k$ and nuts $k^2$. The ends of the irons pass through perforated ears $o$ $o$ of chafing-plates O, resting on the bolster, and secure said plates to the bolster and the latter to the springs.

P designates the king-bolt secured centrally to the bolster by plates $p$ and bolts $p'$.

R designates a channel-iron bar, which is pivoted on said bolt, being provided with suitable chafing-plates, and its ends are bolted to angle-iron S, secured to the side sills of the car-body. By this construction the body-bolster R is carried up between the sills of the body, thus lowering the body nearer the rails. To further support the sills of car truss-rods $t$ are arranged on the sides of bar R and parallel therewith, being supported at center on a chair-casting T, and their ends pass through the sills and are secured thereto by lipped washers and nuts, as shown.

The particular features of this truck are the transverse and longitudinal motions permitted the bolster without interfering with the movements of the truck-frame, the arrangement of spring whereby the bolster and frame are amply cushioned and yet an open center left between the wheels, so that electric motors can be conveniently attached to the truck; also the wheels can be set close together and the body of car is lowered, reducing the height of car-steps.

The invention is designed more particularly for double truck-cars. If it is desired to further stiffen the side beams, truss-rods V may be used, as shown in detail, Figs. 8 and 9. These rods are suspended between the members of the beams, being attached to the castings G or to bolts secured to the beams, and at center they support an upright stud-bolt $v$, which centrally sustains a plate attached to the beam between bars I, or bolt $v$ may be connected directly to castings F. The bolts $v$ are provided with adjusting bolts and nuts for regulating the tension on the truss-rods.

What I claim as new is—

1. The combination of the side beams, the corner-castings attached thereto, having inwardly-projecting extensions, and the end bars bolted to said extensions, substantially as described.

2. The combination of the side beams, the journal-box castings attached thereto, the socket-castings attached to the ends and centers of said beams, the inclined brace-rods connecting the jaws of the journal-box castings to said socket-castings, and the end bars bolted to projections on the end castings, substantially as specified.

3. In a car-truck, the combination, with the truck-frame, of a pair of independent swinging hangers at each side of the frame, and the elliptical springs arranged parallel with the side beams of the truck-frame and suspended by said hangers, whereby an open center is left between the wheels and the bolster supported on said springs, substantially as set forth.

4. The herein-described castings B, for the purpose set forth, having socket $b^2$, flanged extension B', depending flange $B^3$, and ears $B^2$, substantially as specified.

5. The combination of the side beams, the journal-box castings, and the journal-box with the cap-casting G, secured to the beam above the journal-box, and a coiled spring interposed between the journal-box and cap-casting, substantially as described.

6. The combination of the side beams, the journal-box castings attached thereto, the castings attached to the ends of the beams, having sockets and inwardly-projecting extensions, and the end bars connected to said extensions, with the journal-boxes, the castings secured to the beam above the same, and the coiled spring interposed between the boxes and the cap-castings, substantially as described.

7. The combination of the side beams and the journal-boxes and journal-box castings and the end castings B, central castings F, cap-castings G, springs H, bars C, and brace-rods E $e$, substantially as described.

8. The combination of the side beams, the transverse bars having downwardly-bent ends secured thereto about centrally of the frame, the stirrup-blocks suspended from said bars by hanger-irons, springs supported on said blocks, and the bolster supported on said springs between and above the bars, substantially as described.

9. The combination, with the side beams, the journal-box castings, and brace-rods on opposite sides thereof, of the central truss-rods V and stud-bolts $v$, all substantially as set forth.

10. The combination of the frame, the bars I I, castings F, the truss-rods V, and stud-bolts $v$, substantially as set forth.

11. The combination of the side beams, the transverse bars secured thereto about centrally of the frame, the stirrup-blocks suspended from the said bars by hanger-irons, the springs supported on said blocks, and the bolster mounted on said springs, with the

casting bolted to the beams between the bars and having inwardly-projecting flanges to guide the ends of the bolster, substantially as specified.

12. The herein-described truck, consisting of side beams, the journal-box castings attached thereto, the corner-castings attached to the ends of the beams, having inwardly-projecting extensions, the end bars attached to said extensions and the central castings attached to the beams, the inclined brace-rods connected to the journal-box castings and to said end and center castings, the pair of parallel transverse bars having downwardly-bent ends attached to the side beams about centrally of the frame, the stirrup-blocks suspended from said bars, springs mounted on said blocks, the bolster mounted on said springs, and the castings secured between the bars and having guide-flanges between which the ends of the bolster are guided, substantially as specified.

In testimony that I claim the foregoing as my own I affix my signature in presence of two witnesses.

JOHN TAYLOR.

Witnesses:
SAUL SHANFIELD,
C. E. CANFIELD.