(12) UK Patent Application (19) GB (11) 2 149 062 A

(43) Application published 5 Jun 1985

(21) Application No 8324117

(22) Date of filing 8 Sep 1983

(51) INT CL⁴
A61F 2/24

(52) Domestic classification
F2V V2
U1S 1035 F2V

(56) Documents cited
None

(58) Field of search
F2V

(71) Applicant
Endre Bodnar,
9 West End Court, West End Avenue, Pinner,
Middlesex

(72) Inventor
Endre Bodnar

(74) Agent and/or Address for Service
Stanley Popplewell Poole,
57 Lincoln's Inn Fields, London WC2A 3LS

(54) Improved cardiac valve

(57) A bioprosthetic replacement valve in which a bilogical part comprising a natural aortic or pulmonary valve of human or animal origin in employed as a cusped valve member 5, and which includes an outflow orifice, the arrangement being such that those parts of the orifice which are likely to come into periodic contact with the cusped member comprise biomaterial comprised either of an extension 8 of the cusped valve member or as a separate member.

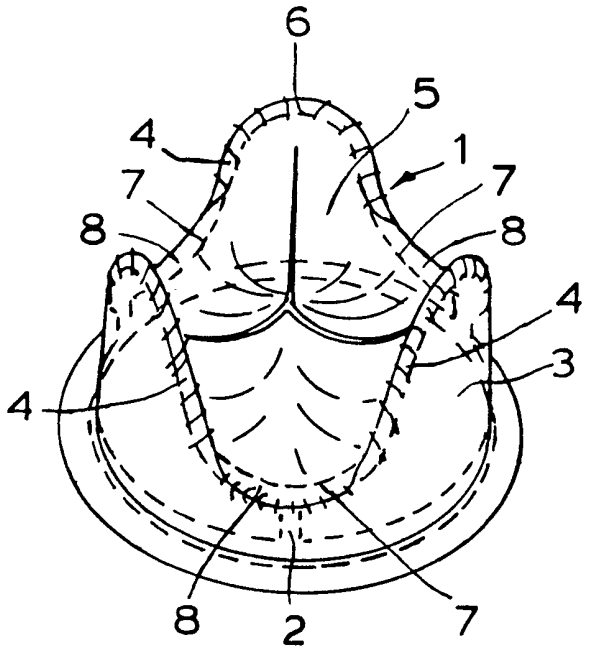

FIG. 2.

GB 2 149 062 A

2149062

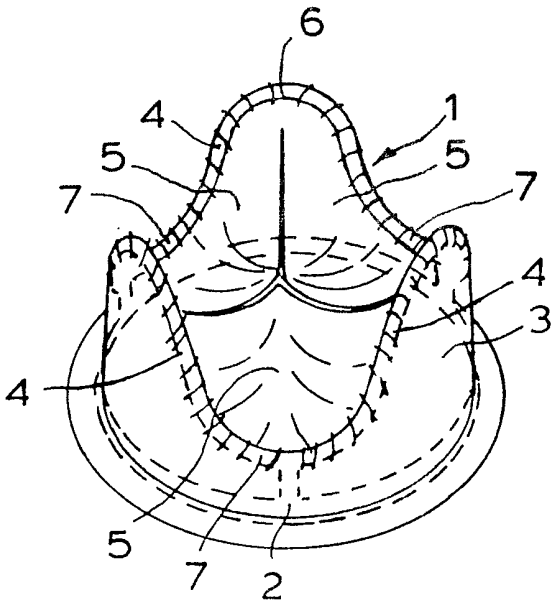

FIG. 1. PRIOR ART

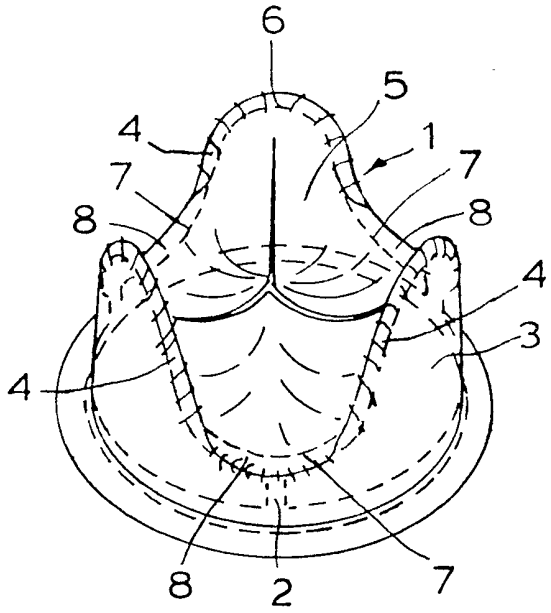

FIG. 2.

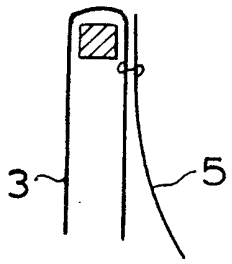

FIG. 3.

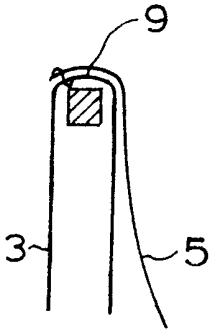

FIG. 4.

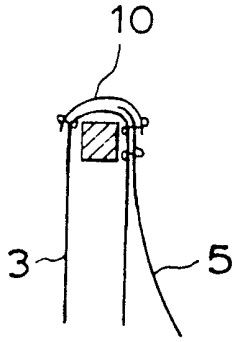

FIG. 5.

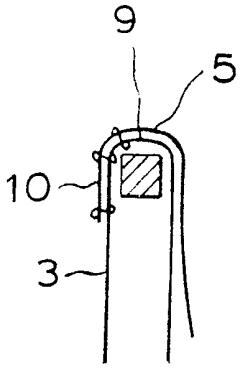

FIG. 6.

SPECIFICATION

Improved cardiac valve

This invention relates to a bioprosthetic replacement cardiac valve.

Replacement cardiac valves are known. There are two types:- the mechanical and the bioprosthetic. The bioprosthetic replacement heart valve has the advantage that is is non-thrombogenic but has a disadvantage that its durability is limited, mainly because of mechanical wear and tear. Generally, bioprosthetic replacement heart valves include a support or stent and a cusped valve member of biological origin. Because the valve in use will open and close some 40 million times a year it is clearly of the utmost importance that it be constructed for the longest possible life and greatest reliability. It has been found with known bioprosthetic replacement cardiac valves that wear can occur as a result of contact between the stent and the cusped valve member, particularly if the stent is covered or sheathed with synthetic material and the valve member comprises a porcine aortic valve.

According to the present invention there is provided a bioprosthetic replacement valve in which a biological part comprising a natural aortic or pulmonary valve of human or animal origin is employed as a cusped valve member, and which includes an outflow orifice, the arrangement being such that those parts of the orifice which are likely in use to come in periodic contact with the cusped member comprise biomaterial.

The biomaterial may be any suitable material of biological origin, such as human or animal tissue.

The support or stent is preferably covered or sheathed with cloth. At those parts thereof defining said orifice and which are likely to come into contact with the biological part, the cloth would be replaced by or covered with a said biomaterial. These said parts may be covered with an extension of the biological part forming the cusped valve member or by separate biomaterial.

An embodiment of the present invention will now be described, by way of example only, by reference to the accompanying drawings, in which:

Figure 1 is a representation of a prior art replacement cardiac valve; and

Figure 2 is a representation of a bioprosthetic replacement aortic valve according to the present invention.

Referring to Fig. 1, a known valve 1 comprises a stent or support 2 sheathed in cloth 3, in this case DACRON. The sinusoidal periphery 4 of the stent 2 defines an outflow orifice. A cusped valve member 5 which is a pig aortic valve is attached to the sinusoidal periphery 4 at the outflow orifice. It has been found that frictional wear of the valve member 5 takes place as a result of contact between the valve member 5 and the regions 7 of the sinusoidal periphery 4 of the DACRON-covered stent 2.

Referring now to Fig. 2, like parts to those in Fig. 1 are referred to by like numerals. It will be seen that in this embodiment of the present invention, the biological material of the cusped valve member 5 is extended over the lowermost regions 7 of the sinusoidal periphery 4 of the DACRON-covered stent 2, as at 8, 8, and 8 and sewn at these regions to the outer surface of the covered stent 2. Significantly greater life is to be expected from the valve of Fig. 2 over that shown in Fig. 1.

It is to be understood that the present invention is applicable to all replacement heart valves which use natural aortic or pulmonary valves of human or animal origin, including particularly those replacement valves in which the biological part is first attached to the sinusoidal periphery and then a separate strip of cloth applied over the whole of the sinusoidal periphery to conceal the outer edges of the biological part. In this case the biological part may be extended and sewn into position in the regions 7 (see Fig. 2) in like manner to that of Fig. 2, and subsequently the strip of cloth sewn to the periphery and caused to deviate at the said regions 7, 8 so as not to cover at those areas the extended biomaterial.

Examples of known aortic valves which can be modified to advantage by means of the present invention include those offered for sale by Hancock, Carptenter-Edwards, Xenomedica, Liotta-Sorin and Wessex Medical.

Fig. 3 of the accompanying drawings illustrates the application of the present invention to such other forms of bioprosthetic replacement aortic valves.

Specifically Figs. 3 and 5 are respectively vertical sections through lowermost regions of known replacement aortic valves whilst Figs. 4 and 6 respectively show modifications made to the valves of Figs. 3 and 5 by incorporating therein the features of the present invention.

Referring to Fig. 3, there is shown diagrammatically in vertical section that fragment of a known bioprosthetic replacement aortic valve which constitutes a lowermost part of the sinusoidal periphery of the valve.

The sinusoidal periphery 4 of the stent 2 is covered in cloth 3. The cusped valve member 5 is sewn to the cloth.

In Fig. 4 the valve of Fig. 3 is modified by arranging that the biomaterial of the cusped valve member 5 extend over substantially all of the top surface 9 of the cloth covered periphery 4 of the stent 2.

In Fig. 5 there is shown a known arrangement similar to that of Fig. 3, except that the aesthetic reason the margin of the cusped

valve member 5 is covered by a separately applied strip of cloth 10.

In the embodiment of Fig. 6 the valve of Fig. 5 is modified by arranging that the biomaterial of the cusped valve member 5 extend over substantially all of the top surface 9 of the cloth covered periphery 4 of the stent 2 and that the strip of cloth be deviated at the lowermost region 7 of the periphery 4 so that at this region the biomaterial constitutes the wear surface of the outflow orifice.

It is envisaged that a separate piece of biomaterial may be used to cover the contact areas of the sinusoidal periphery rather than employing a continuation of the biological part defining the cusped valve member.

It is to be understood that the present invention embraces all those modifications and improvements which would be apparent to one skilled in the art.

CLAIMS

1. A bioprosthetic replacement valve in which a biological part comprising a natural aortic or pulmonary valve of human or animal origin is employed as a cusped valve member, and which includes an outflow orifice, the arrangement being such that those parts of the orifice which are likely to come into periodic contact with the cusped member comprise biomaterial.

2. A valve according to Claim 1, including a support or stent which is covered or sheathed with cloth but in which, at those parts thereof defining said orifice and which are likely to come into contact with the biological part, said cloth is replaced by or covered with a said biomaterial.

3. A valve according to Claim 2 in which said parts are covered with an extension of the biological part forming the cuspid valve member.

4. A valve according to Claim 3 wherein the stent includes a sinusoidal periphery the biological part being sewn onto said periphery and being caused to extend over the trough portions in said sinusoidal periphery, a strip being subsequently sewn over the whole of the sinusoidal periphery and caused to deviate at the trough portions in said sinusoidal periphery so that the extended biological part remains uncovered at those portions.

5. A valve according to Claim 3, in which the sinusoidal periphery of the stent is first covered with a cloth, and the biological part is sewn to the cloth covering.

6. A valve according to Claim 5, in which the biological part is arranged to extend over the trough portion of the cloth-covered trough portions of the stent.

7. A valve according to Claim 5, in which a strip of cloth is applied to the sinusoidal periphery of the stent after the biological part has been sewn to the cloth covering thereof, said cloth strip being deviated at said trough portions so that the extended biological part remains uncovered at said trough portions.

8. A valve according to Claim 1 or 2 in which biomaterial separate from the biomaterial of the biological part is used to cover the contact areas of the support or stent.

9. A valve according to any preceding Claim in which the biological part is a pig aortic valve.

10. A bioprosthetic replacement valve substantially as hereinbefore described with reference to Fig. 2, Fig. 4, or Fig. 6 of the accompanying drawings.

11. The features hereinbefore disclosed, or their equivalents, in any novel selection.

Printed in the United Kingdom for
Her Majesty's Stationery Office, Dd 8818935, 1985, 4235
Published at The Patent Office, 25 Southampton Buildings, London, WC2A 1AY, from which copies may be obtained