April 13, 1937. B. WALKER 2,077,135

DOOR LOCKING MECHANISM

Filed Jan. 6, 1933 3 Sheets-Sheet 1

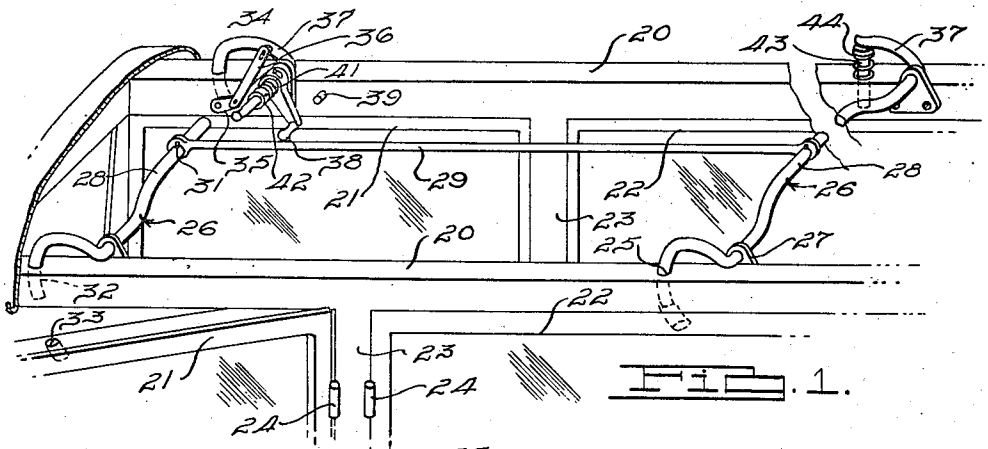

Fig. 1.

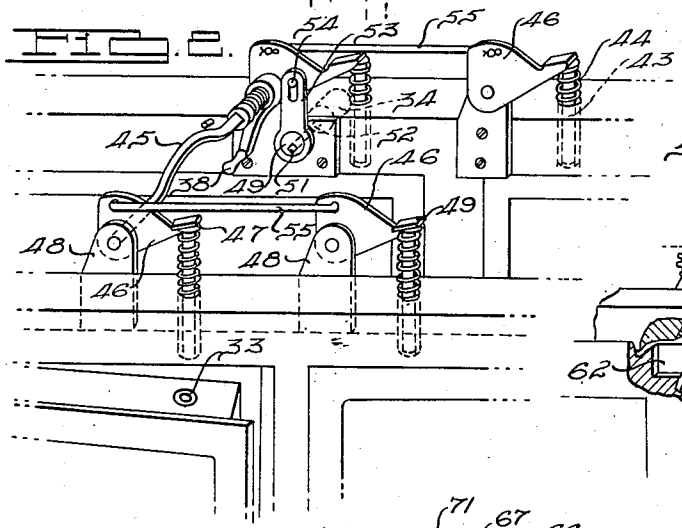

Fig. 2.

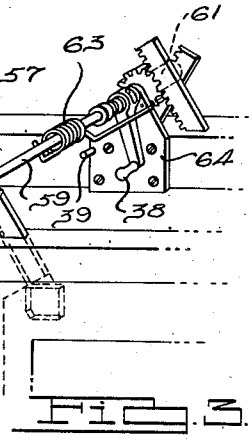

Fig. 3.

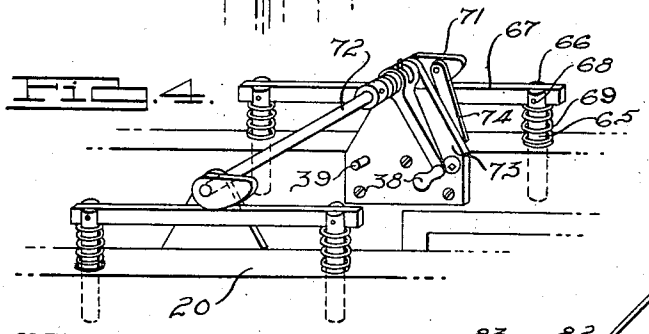

Fig. 4.

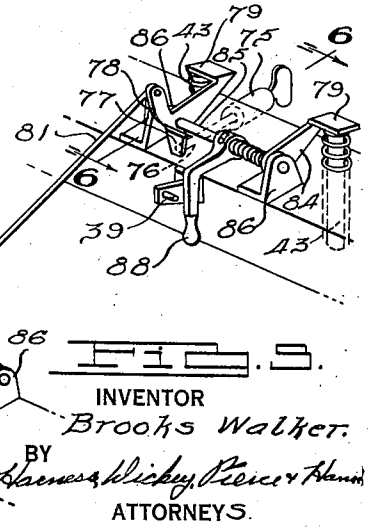

Fig. 5.

INVENTOR
Brooks Walker.
BY
Harness, Dickey, Pierce & Hanes
ATTORNEYS.

April 13, 1937. B. WALKER 2,077,135

DOOR LOCKING MECHANISM

Filed Jan. 6, 1933 3 Sheets-Sheet 2

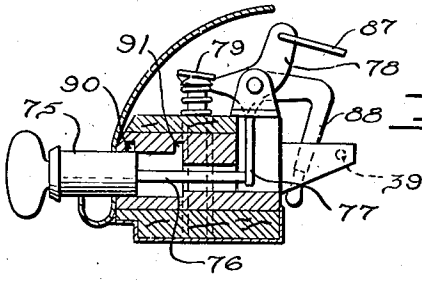

Fig. 6.

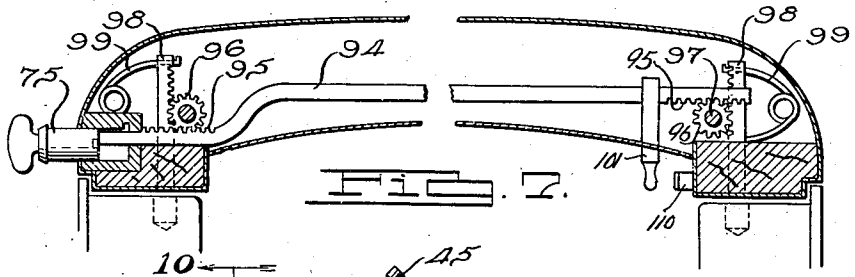

Fig. 7.

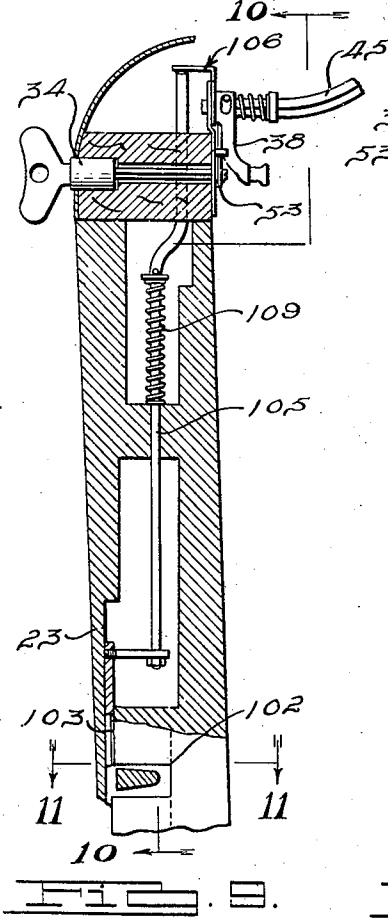

Fig. 8.

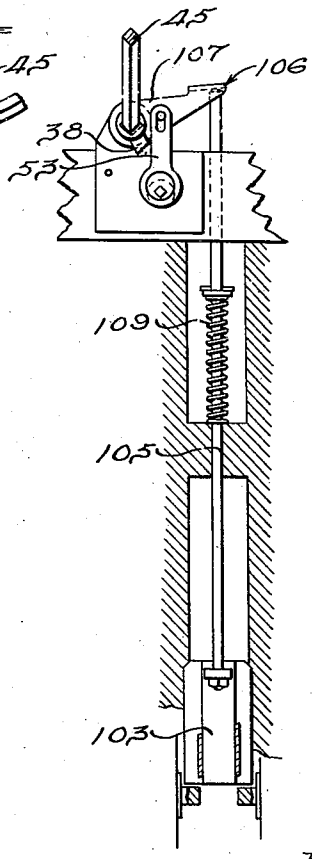

Fig. 10.

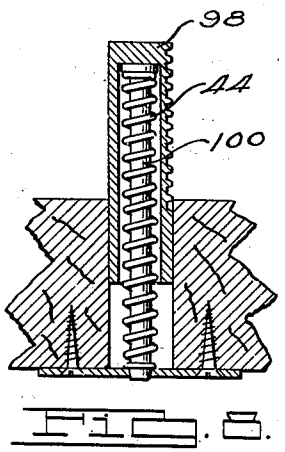

Fig. 9.

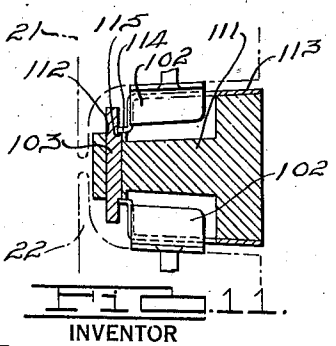

Fig. 11.

INVENTOR
Brooks Walker,
BY
Harness, Dickey, Pierce & Hann,
ATTORNEYS

April 13, 1937. B. WALKER 2,077,135

DOOR LOCKING MECHANISM

Filed Jan. 6, 1933 3 Sheets-Sheet 3

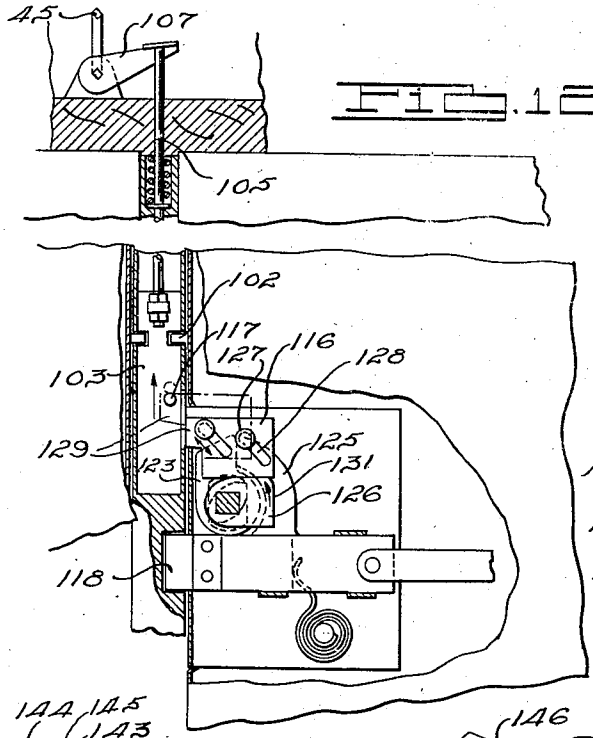

FIG. 12.

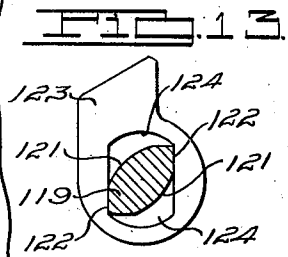

FIG. 13.

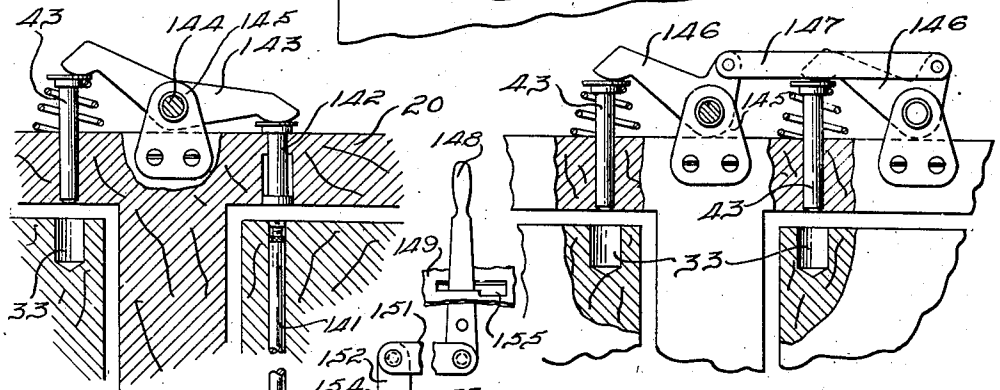

FIG. 15.

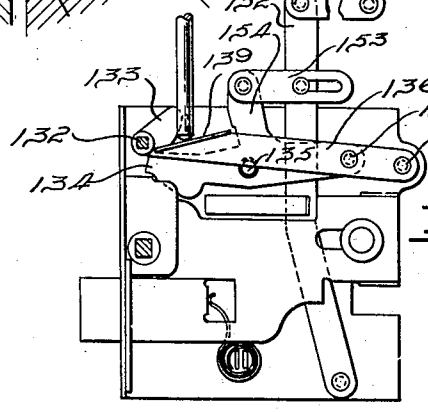

FIG. 14.

INVENTOR
Brooks Walker.
BY
Harness, Dickey, Pierce & Mann.
ATTORNEYS.

Patented Apr. 13, 1937 2,077,135

UNITED STATES PATENT OFFICE

2,077,135

DOOR LOCKING MECHANISM

Brooks Walker, Piedmont, Calif.

Application January 6, 1933, Serial No. 650,399

3 Claims. (Cl. 292—33)

My invention relates to door locks and particularly to structure for simultaneously locking a plurality of doors from a point interior and exterior of a closure.

The structure of the present invention is utilized independent of the latching means ordinarily employed on doors, for engaging all of the doors of a closure to securely lock the doors against opening. The locking structure is such that once the doors are locked and the key removed, it is impossible to unlock the doors either from the exterior or the interior thereof without the use of the key. However, means are employed for locking the doors from the inside of the closure through the manipulation of a suitable handle control to prevent entrance from the exterior thereof when the closure is occupied. While the closure herein shown is a vehicle body, it is to be understood that the invention is not limited to bodies but applies to rooms and other types of closures.

Accordingly, the main objects of my invention are: to provide interconnecting means across the top of a vehicle body between the roof and the interior top finishing element adjacent to locking bolts or fingers which extend into the roof rails above the door to be manipulated to extend into apertures in the door; to provide a structure which may be spaced from each other along the roof rails of the vehicle so as to engage the latching ends of the doors irrespective of whether the doors are hinged together on the central pillar or having one hinge and one latch thereon; to provide a lock cylinder in the side quarter panel and roof rail which when turned actuates the interconnected structure and bolts to simultaneously move the bolts into the top sill of the door; to provide mechanism for interconnecting the lock cylinder with the interconnected structure and bolts to provide a mechanical advantage to the system to permit a small force applied to the key to actuate the structure; to provide spring biased bolts for projecting through the roof rail into the doors which are thereby disconnected from the interconnected operating mechanism so that if one door is jammed through collision or otherwise, the mechanism may be operated to release the other doors; to provide laterally movable structure in the roof rail to operate the sets of bolts to engage all of the doors through a longitudinal push or pull movement on an interconnecting element; to lock the doors through the engagement of the door dovetail to prevent it from being moved outwardly from the receiving fingers; to provide a key in a door having means thereon for operating the elements for intercepting the door dovetails; to provide a shaft on the handle of a lock which is constructed in such manner as to permit a counterclockwise turning movement through 90 degrees to operate a movable element into a position to intercept the door dovetails; to provide a lock on a door independent of the handle, which may be utilized for actuating mechanism for locking all of the doors at the same time; to provide means interconnected with the mechanism which may operate the mechanism to lock the doors interiorly of the vehicle; and, in general, to provide a simple and practical construction for locking all of the doors of a closure at the same time by means independent of latch bolts, which is simple in construction, economical of manufacture and positive in operation.

Other objects and features of novelty of my invention will be either specifically pointed out or will become apparent when referring, for a better understanding of my invention, to the following description, taken in conjunction with the accompanying drawings, wherein:

Figure 1 is a broken view in perspective, of locking structure for a plurality of doors of a vehicle which embody features of my invention,

Fig. 2 is a perspective view of a structure, similar to that shown in Fig. 1, illustrating a modified form thereof,

Fig. 3 is a perspective view of a further form of locking means for a plurality of doors of a vehicle,

Fig. 4 is a perspective view of another modified form of construction which may be employed for locking all four doors of a vehicle,

Fig. 5 is a perspective view of a further modified form of construction for locking all four doors of a vehicle through the longitudinal movement of the locking chamber,

Fig. 6 is an enlarged sectional view of the structure illustrated in Fig. 5,

Fig. 7 is a broken sectional view of a vehicle body and doors illustrating locking means for the doors which embodies a further modified form of my invention,

Fig. 8 is an enlarged sectional view of a rack and bolt construction which may be employed in connection with the structure illustrated in Fig. 7,

Fig. 9 is a broken sectional view of door locking mechanism which embodies a further modified form of my invention,

Fig. 10 is a sectional view of the structure

illustrated in Fig. 9, taken on the line 10—10 thereof,

Fig. 11 is an enlarged sectional view of the structure illustrated in Fig. 9, taken on the line 11—11 thereof,

Fig. 12 is a broken sectional view of a modified form of the structure illustrated in Figs. 9, 10, and 11,

Fig. 13 is an enlarged sectional view of a portion of the actuating shaft illustrated in Fig. 12,

Fig. 14 is a broken sectional view of a lock and mechanism embodying a further modified form of construction for locking doors simultaneously, and

Fig. 15 is a broken view, in elevation, of structure employed in combination with that illustrated in Fig. 14, for locking the doors on the opposite side of the vehicle.

In Fig. 1, I have illustrated a vehicle having side top rails 20, front doors 21 and rear doors 22. The doors are supported on pillars 23 by hinges 24 so that the latching edges of the doors are disposed a greater distance apart, being adjacent to the front and rear pillars, respectively. Since the latching mechanism is to be so mounted as to engage the latching edges of the door, the locking bolts 25 must be disposed a maximum distance apart as illustrated in Fig. 1. The bolts 25 of the structure illustrated in Fig. 1, are the ends of rods 26 which are bent in arcuate shape about the center of the rods 26 which are supported on brackets 27. The central part of the rods are bowed upward at 28 to provide clearance on the interior of the vehicle, and are employed as crank arms to be interconnected by a link 29 which is mounted on the rods and retained thereon against lateral movement by suitable means, such as cotter pins 31, and causes the rods to be operated in unison. The rods project, in retracted position, through apertures 32 in the rail to substantially the under surface of the rail, and are disposed directly above an aperture 33 in the door in which the ends of the bolts 25 project, when the mechanism is operated.

For operating the mechanism, I have provided a locking cylinder 34 which is mounted in the rail 20 above the door as more clearly shown in Fig. 2. The cylinder extends through the roof rail and is attached to an arm 35 pivoted to a link 36 which is in engagement through a pin and slot connection with the extension 37 which supports the bolt 25. The portion 37 is moved downwardly when the key is turned to locked position in the cylinder. The movement of the one portion 37 causes the one rod 26 to turn and therefore the other rod 26 to be actuated through cranks 28 and the link 29 to have all of the bolts 25 move downwardly to project into the apertures 33 in the upper door sills to thereby lock all of the doors. A handle 38 is mounted on the shaft 26 having a certain amount of play therewith through a pin and slot connection so that the key may be operated to its full operating position without operating the handle to its locked position and prevents the handle from being employed for actuating the bolts 25 to open position. However, the handle 38 is available when operated from the inside, to move the fingers 25 into locked position and to be retained therein by the passing of the handle 38 over the locking pin 39. In this manner, the simple movement of the handle 38 beyond the pin 39 causes all the doors to be locked from the interior thereof and ingress to the vehicle from the exterior thereof is entirely prevented. The handle is also in a position out of reach of children who may be riding in the vehicle and who may unlatch the doors by operating the door handles and will prevent the doors from opening in view of the doors being locked by the bolts 25. A spring 41 may be employed between the handle 38 and a collar 42 on the rod 26, to force the rod against one side of the vehicle and the handle against the other side thereof to prevent rattling of the locking elements.

In the broken upper corner of Fig. 1, I have illustrated the extension 37 of the rod as being disconnected from bolts 43 which have a spring 44 thereon for retrieving the bolts 43 employed in place of the connected fingers 25. When one of the bolts 43 is jammed due to a collision, to such a degree as to prevent its ordinary operation by a key or handle 38 the mechanism could still be operated to permit other of the doors to be unlocked.

In Fig. 2, I have illustrated a modified form of construction employing the bolts 43 and springs 44 wherein a cross rod 45 is utilized, preferably of square section, having crank arms 46 thereon which are flanged at 47 for engagement with the bolts 43. The rod 45 is mounted on suitable brackets 48 to permit the turning of the rod 45 therein. For operating the rod, I provide a disc 49 having a square hole 51 in offset center relation which is engaged by a rod 52 mounted in extension of the lock cylinder 34. A link 53 has an aperture which encompasses the disc 49 and a slot which engages a pin 54 provided on one of the crank arms 46 to permit the operation of the handle 38 mounted loosely on the rod 45 in substantially the same manner as the handle 38 is operated on the rod 26 in the structure illustrated in Fig. 1.

A second set of brackets 48 are provided adjacent to the edge of two other doors of the closure, having crank arms 46 thereon with the flanges 47 thereof engaging the bolts 43. The second set of crank arms 46 on each side of the door are connected to the first-mentioned crank arms by suitable links 55. The operation of the key in the lock cylinder 34 causes the cylinder extension 52 to be turned, which turning causes the link 53 to be drawn downwardly in view of the eccentric connection of the extension 52 with the disc 49. This causes the crank arm 46 to move downwardly and rotate the rod 45 which in turn rotates the crank arms on the opposite side of the closure. In this manner, the turning of the key and the rotation of the rod 52 causes all of the crank arms 46 to be rotated in a clockwise direction to move the bolts 43 into the apertures 33 in the doors to securely lock the doors in place.

This construction is novel in view of the fact that the links 55 may be chosen of any length so that the bolts 43 may be disposed at any lengths apart to engage the latching edges of the doors whether they are disposed adjacent to the central pillar or adjacent to the front or rear body pillars or one adjacent to the central pillar and one adjacent to the other pillar, as the case may be.

In Fig. 3, I have illustrated a further modified form of my invention wherein locking fingers 57 are in the nature of slidable racks which engage pinions 58 interconnected by a shaft 59 which is turned directly by a key in the cylinder lock 61. Apertures 62 are provided in the latching edges of the door to receive the racks when the shaft 59 is rotated to cause a downward movement of the racks. A handle 38 is provided on the shaft

on the interior of the vehicle for rotating the shaft 59 and when the handle is disposed over the pin 39, the doors are retained in locked position. A single spring 63 is provided about the shaft 59 having one end secured to the shaft and the other end retained by a bracket 64 which supports the shaft, to retrieve the shaft and retain the racks in retrieved position when the structure is moved to door unlocked position.

In Fig. 4, I have shown a further modified form of my invention wherein bolts 65 are mounted in the side rails 20 of a vehicle top rail, having slots 66 in the upper end thereof for receiving cross bars 67 which are retained by a suitable means, such as pins 68. Springs 69 are employed for retrieving the bolts 65 and the bars 67 to unlocked position while suitable cams 71, mounted in aligned relation on a rotatable shaft 72, are utilized for controlling the position of the bars and therefore the bolts.

The shaft 72 is mounted on the top rails by suitable brackets 73, one of which is provided with a pin 39 to retain a handle 38 in locked position in the hereinabove specified manner. A suitable link 74 is employed to engage the disc 49 or other means hereinabove described and not shown in the figure, to be actuated by rotation of the key in a lock cylinder to rotate the shaft 72 and the cams for moving the interconnecting bars 67 downwardly to carry the bolts 65 therewith to lock all of the doors simultaneously.

In Fig. 5, I have illustrated a further form of my invention wherein a lock cylinder 75 is employed in the top side quarter panel of the vehicle body having an extending rod 76 thereon in engagement with a flange 77 on the bell crank 78. One arm of the bell crank 78 is provided with a flange 79 for engaging a bolt 43, the other arm of which has an aperture for receiving a rod or cable 81. The rod or cable 81 extends across the top of the vehicle body to engage an arm 82 of a bell crank having the other arm 83 thereof provided with a flange 79 for engaging a bolt 43 on the opposite side of the body. The bell crank 78 is secured to a shaft 85 which is pivoted at each end on brackets 86 and has secured thereto an arm 84 on the opposite end thereof provided with a flange 79 for engaging a bolt 43.

A handle 88 is mounted with a predetermined amount of play to the shaft 85 to be employed for actuating the shaft 85 in a clockwise direction when pulled outwardly from the side of the body. A pin 39 is provided to receive and retain the handle in outward position to cause the bolts 43 to be held in door locked position. On the opposite side of the vehicle the bell crank 83 is secured to a shaft 89, the ends of which are supported in brackets 86 and which likewise has an arm 87 secured to the opposite end thereof and provided with a flange 79 for engagement with a bolt 43. Through the inward movement of the lock cylinder 75 and the turning of the key thereafter to retain the cylinder inward through the movement of an extension 90 thereon in an aperture 91 provided within the lock cylinder recess, as clearly illustrated in Fig. 6, the locking of all four doors is accomplished.

The inward movement causes the bracket 78 to be rotated in a clockwise direction to cause the bell crank arm 82 to operate the arm 83 and to cause the arms 84 and 87 to be actuated through the shafts 85 and 89 to thereby have all of the doors locked simultaneously. The play in the connection between the handle 88 and the shaft prevents the engagement of the handle with the pin 39 and eliminates the possibility of employing the handle to release the bell crank and arms and also prevents the locking of the handle so that the operation of the lock cylinder with the key would not unlock the doors.

In Fig. 7, I have shown a modified form of the construction illustrated in Fig. 5 wherein the pushing of the lock cylinder 75 pushes directly upon an offset rod 94 which is provided with oppositely disposed racks 95. The racks are in communication with spur gears 96 which are attached to shafts 97 which may, in a four door vehicle, be connected to an additional set of spur gears 96 (not shown) which communicate with rack bolts 98 for manipulating the bolts downwardly into engagement with the doors to lock two or four doors simultaneously. Suitable spring means 99 are employed for aiding in the retrieving of the bolts and retaining them in unlocked position. A suitable handle 101 is provided connected to the rod 94 to be moved laterally across the vehicle to enable the locking of the vehicle from the interior thereof. Suitable holding means 110 is provided for retaining the handle in position away from the side of the vehicle to retain the bolts in locked position.

The bolts 98 may be constructed in accordance with the showing of Fig. 8 wherein a locking bolt 100 is biased by a spring 44 in the manner hereinabove described to have the bolt retrievable by the spring independent of the position of the rack 98. In this construction, should the bolt 100 jam due to a collision and the crushing of one of the doors, the rod 94 and its associated structure could readily be operated to withdraw the bolts from the other doors not so jammed to permit the operation of the doors even though one should be jammed so badly as to prevent the retrieving of the bolt.

Referring to Fig. 9, I have illustrated a further modified form of my invention wherein the door dovetail 102 is employed for retaining the doors in locked position. In this construction, a plate or slidable element 103 is mounted on the center pillar 23 of the door or on the front and rear pillars thereof, depending upon how the doors are hinged, and is connected through a rod 105 to suitable actuating mechanism 106 mounted at the top of the car. It is to be understood that the plate 103, rod 105 and mechanism 106 is provided on both sides of the vehicle interconnected by a rod 45. Arms 107 of the actuating mechanism 106 are actuated by a lever 53 and lock 34 or handle 38 hereinabove described in regard to Fig. 2. Upon the turning of the key in the lock cylinder 34, the rod 105 is moved downwardly to move the plate 103 into the path of movement of the door dovetail 102 to securely lock the doors against opening through the positioning of the plate 103 in the path of outward movement of the door dovetail 102. Suitable springs 109 may be provided on the rod 105 for aiding in the retrieving of the rod and plate and for retaining the plate in retrieved position.

Referring to Fig. 11, I have shown one method of supporting the plate 103 in a pillar 111 which is illustrated as being solid although the same mounting could be employed in a hollow pillar, wherein a slot 112 is provided in which the plate 103 is longitudinally movable. A housing 113 for retaining the dovetail clamping finger is modified to support the plate against lateral movement by suitable flanges 114 which engages shoulders 115 provided on the plate.

Referring to Fig. 12, I have shown a further

method which may be employed for actuating the slide 103 which is that in which the handle of the door for actuating the latching bolt thereof is movable in counter-clockwise direction from normal position to move an actuating element 116 outwardly of the door and upwardly of the post to engage a pin or other suitable element 117 on the plate for moving the plate upwardly into a position to intercept the path of the dovetails 102. For obtaining the reverse movement of the handle without effecting the operation of the door latch 118, I construct the shaft 119 of the lock with curved surfaces 121 and with flat portions 122, as illustrated in Fig. 13. The tumbler bar 123 is provided with arcuate edges 124 to permit the counter-clockwise movement of the shaft 119 substantially 90 degrees. However, the clockwise movement of the shaft 119 from the position illustrated in Fig. 13 causes the tumbler bar 123 to rotate against a projecting arm 125 provided on the latch 118 to cause the latch to be retrieved from door-latched position.

On the square portion of the shaft I have provided an arm 126 which is rigidly connected thereto and which is out of the plane of the latch bar 118 to permit a clockwise movement thereof 90 degrees from the position illustrated. When the shaft is operated clockwise 90 degrees from the position illustrated, the latch 118 is moved rearwardly out of engagement with the recess in the pillar to permit the door to be opened as is the common practice. When, however, the shaft is moved 90 degrees counter-clockwise, from the position shown, the arm 126 engages the plate 116 to cause it to move outwardly and upwardly in view of its support on the pin 127 by means of the slot 128 which are disposed at an angle to the door. The projecting end 129 of the plate 116 engages the pin 117 and thereafter, due to its upward movement, causes the plate 103 to move upwardly to intercept the path of movement of the door dovetails.

The flat surface 131 provided on the arm 126, retains the plate in raised position and permits the handle to be locked preferably by disconnecting the handle entirely from the shaft 119 which is the common practice to prevent the handle from being forced and to have the handle freely turnable relative to the shaft. Through the operation of the one plate 103 and the rod 105 the arm 107 is actuated which in turn actuates a similar arm 107, rod 105 and plate 103 on the opposite side of the vehicle through a suitable cross rod 45 as hereinbefore described, to lock two or more doors of the vehicle through the single manipulation of the handle.

In Figs. 14 and 15, I have shown a further modified form of my invention wherein the lock cylinder is mounted in a door (not shown) independently of the handle, having a square extending shaft 132 thereon which is secured to a cam 133. The cam operates a lever 134 which is pivoted at 135 to the lock plate and which in turn operates a lever 136, likewise pivoted at 137 to the lock plate, in view of the interconnecting pivot 138. As a result of the clockwise movement of the cam 133, the lever 138 has its projecting flange 139 moved upwardly to move a rod 141 into engagement with a plunger 142 provided in the car rail 20, to operate a rocker bar 143 which causes the extending arm thereof to operate a bolt 43 into an aperture 33 in the adjacent door. The rocker bar is rigidly attached to a shaft 144 which extends across the top of the car and which is mounted in suitable brackets 145. A bell crank arm 146 is securely attached to the shaft 144 on the opposite side of the car, one arm of which is in engagement with a bolt 43, the other arm of which is pivotally connected by a link 147 to a similar bell crank arm 146 which operates a second bolt 43 in the manner hereinabove described.

In this construction, through the turning of the key in a clockwise direction the shaft 132 is rotated which rotates the cam 133 in a clockwise direction and causes the end 139 and the lever 136 to be moved upwardly to move the rod 141 into a recess in the pillar 20 to lock the door containing the locking mechanism. The movement of the plunger 142 upwardly causes the bolt 43 on the adjacent door to be actuated and through the rotation of the shaft 144 to operate crank arms 146 on the opposite side of the car to cause similar bolts 43 to be moved into engagement with the latch edges of the doors. A suitable handle 148 is pivoted between the panels of the door and extend through a plate 149 in the window ledge. The handle is connected through links 151, 152, 153 and arm 154 to the lever 134. When the handle 148 is pushed forwardly the arm 154 is caused to rotate about the pin 135 to thereby move the end of the lever downwardly out of engagement with the cam 133 to cause the upward movement of the flange 139 of the lever 136 to operate the door engaging bolts as above described. A suitable detent 155 is provided in the plate 149 for receiving and retaining the handle 148 in door locked position. A slot is provided in the link 153 which prevents the movement of the handle 148 when the cam 133 is actuated.

It will be noted that in all instances when the doors are locked from the exterior thereof, the handle provided for manipulating the lock from the interior of the door is ineffective for causing the release of the lock so that once the doors are locked against entrance from the exterior thereof, even though a window should be broken, the interior actuating handle could not be manipulated to cause the doors to be unlocked. This is due to the loose motion connection provided between the interior handle and the exterior locking means and which also prevents the manipulation of the interior handle through the exterior means which might cause it to engage its latch and prevent the unlocking of the doors from the exterior of the vehicle when the exterior lock is manipulated to unlocked position.

While I have described and illustrated several embodiments of my invention, it will be apparent to those skilled in the art that various changes, omissions, additions and substitutions may be made therein without departing from the spirit and scope of my invention, as set forth in the accompanying claims.

I claim as my invention:

1. In a vehicle body having pairs of doors disposed on opposite sides thereof, said doors having apertures in the top rail remote from the hinged side, means above said doors projectable in said apertures, biasing means for retrieving said projectable means from said apertures, and means disconnected from said projectable means for moving said projectable means into said apertures.

2. In a vehicle body having pairs of doors hinged at opposite sides thereof, said doors having apertures in the top rail remote from the hinged side, bolts above said doors projectable into said apertures, springs for retrieving said bolts from said apertures and fingers above said door for moving said bolts into said apertures

against the bias of said springs and movable therefrom a distance sufficient to permit the springs to retrieve the bolts from said apertures.

3. In a vehicle body having doors hinged on opposite sides thereof, said doors having apertures in the top rail remote from the hinged side, means above said doors projectable into said apertures, biasing means for retrieving said projectable means from said apertures, and means for moving said projectable means into said apertures, said moving means being movable independent of said projectable means.

BROOKS WALKER.

Patent No. 2,077,135 Granted April 13, 1937

BROOKS WALKER

The above entitled patent was extended July 24, 1951, under the provisions of the act of June 30, 1950, for 6 years and 214 days from the expiration of the original term thereof.

Commissioner of Patents.