Aug. 23, 1932. A. H. DU GRENIER 1,873,317

DISPENSING MACHINE

Filed Jan. 29, 1931 2 Sheets-Sheet 1

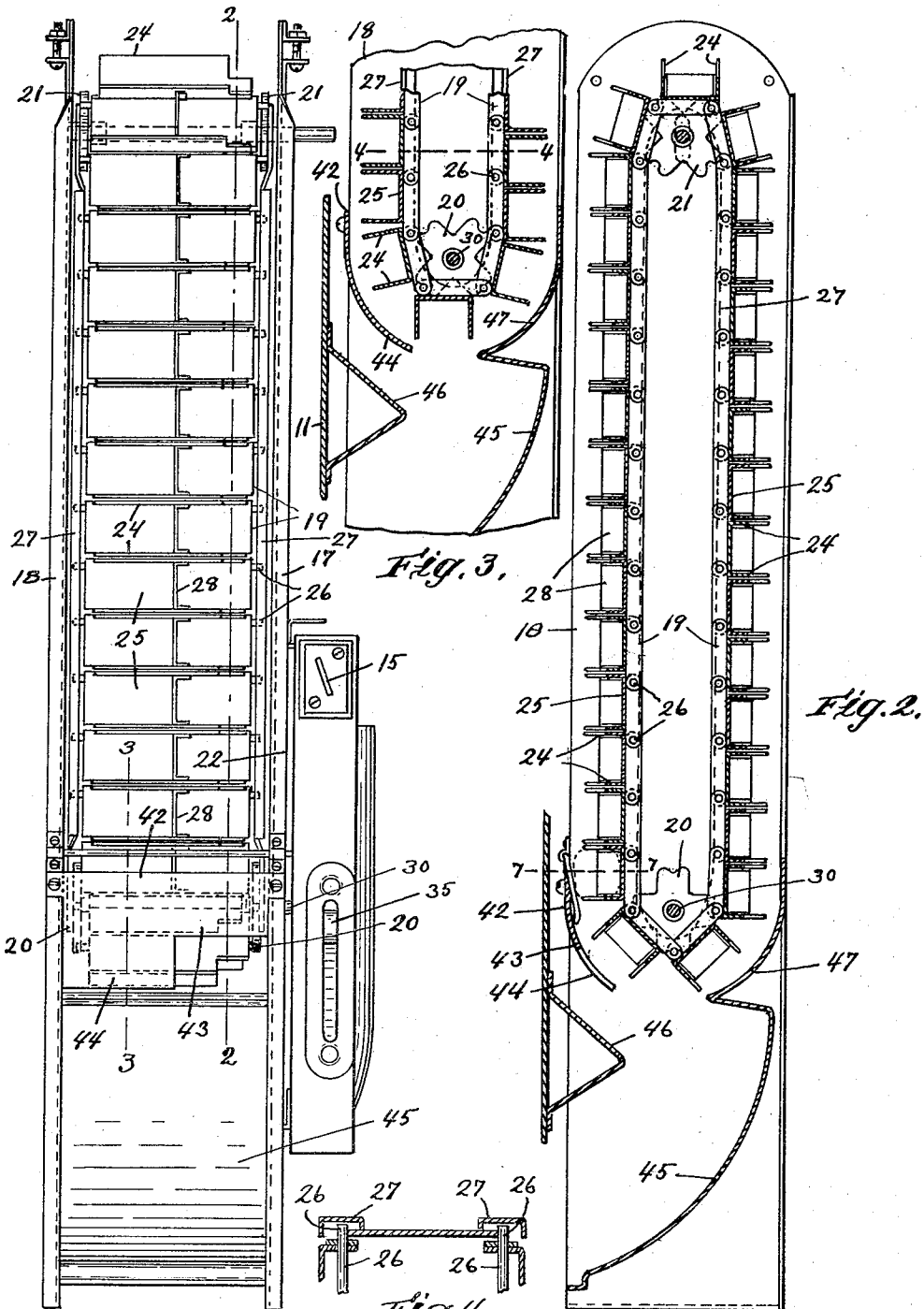

Fig. 1.

Fig. 3.

Fig. 2.

Fig. 4.

Inventor:
Arthur H. Du Grenier.
by L. H. Hammond
atty.

Aug. 23, 1932. A. H. DU GRENIER 1,873,317

DISPENSING MACHINE

Filed Jan. 29, 1931 2 Sheets-Sheet 2

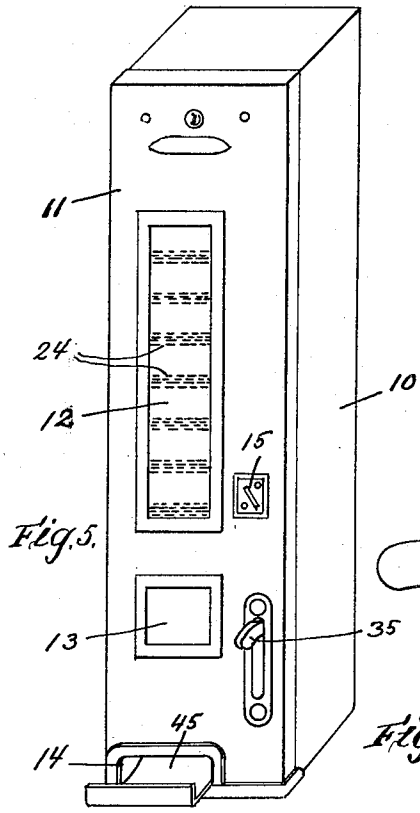

Fig. 5.

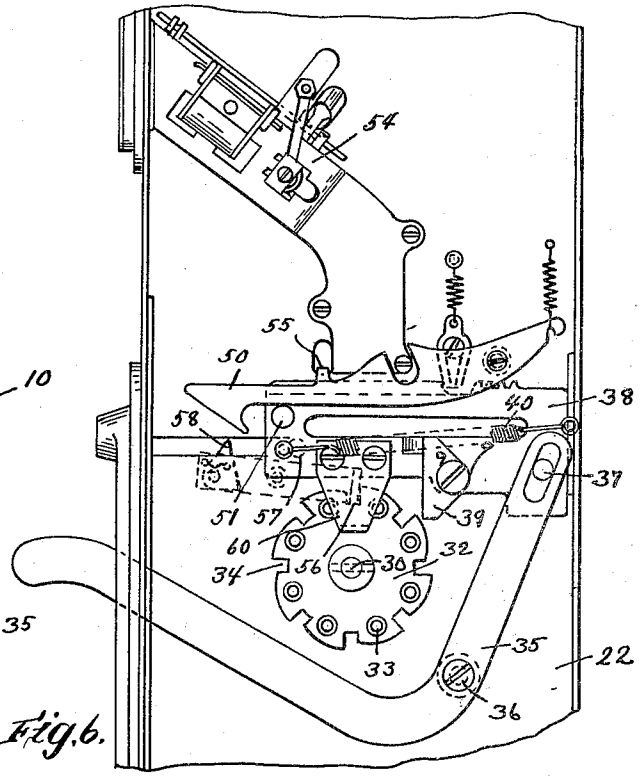

Fig. 6.

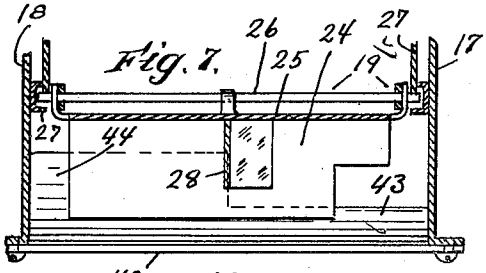

Fig. 7.

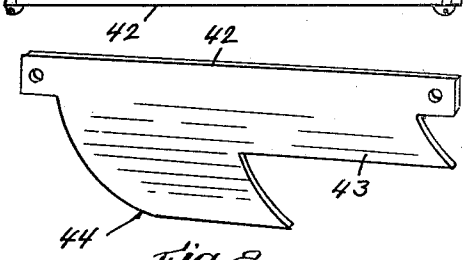

Fig. 8.

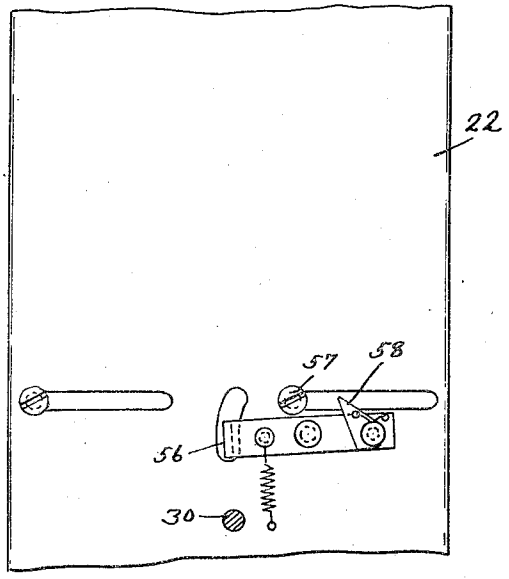

Fig. 9.

Inventor.
Arthur H. Du Grenier
by L. H. Kinnman,
Atty.

Patented Aug. 23, 1932 1,873,317

UNITED STATES PATENT OFFICE

ARTHUR H. DU GRENIER, OF HAVERHILL, MASSACHUSETTS

DISPENSING MACHINE

Application filed January 29, 1931. Serial No. 512,066.

This invention relates to automatic vending machines of the type in which an endless carrier is driven vertically and in which the carrier is provided with a series of shelves from which the articles to be vended are delivered by gravity when the shelves are carried thru the lower portion of their travel.

In machines of this type it is desirable to have the capacity thereof sufficient to avoid the necessity of inconveniently frequent visits for the purpose of replenishing the stock, and, as the available space for such machines is usually limited, it is therefore desirable that such machines be constructed to hold as many articles to be vended as possible for the space occupied.

The objects of my invention are to provide a machine of the type above referred to, which is so constructed that a single endless carrier which is adapted to be operated by a single coin controlled lever, may be loaded with two or more times as many packages, or articles to be vended as may be placed in similar machines having carriers of equal length.

I accomplish these objects by providing a vertically extending endless carrier having projecting shelves, each of which is provided with a plurality of compartments arranged transversely of the carrier, each compartment being adapted to receive an article to be vended, and providing operating means for the carrier so arranged that, on each operative movement thereof the carrier will be advanced to a succession of delivery positions for each shelf corresponding to the number of compartments thereof, and by further providing means adapted to support the articles while the shelves are in declining positions, and to permit delivery of the articles on each shelf successively as the compartment thereof is moved into successive predetermined positions.

For a more complete disclosure of the invention reference is made to the following specification in connection with the accompanying drawings, in which:

Fig. 1 is a front elevation of the machine removed from the outer casing.

Fig. 2 is a vertical sectional view thereof at line 2—2 of Fig. 1.

Fig. 3. is a detail sectional view on an enlarged scale, at line 3—3 of Fig. 1.

Fig. 4 is a detail sectional view at line 4—4 of Fig. 3.

Fig. 5 is a perspective view of the outer casing.

Fig. 6 is a side elevation of the carrier actuating mechanism.

Fig. 7 is a detail sectional view on an enlarged scale at line 7—7 of Fig. 2.

Fig. 8 is a detail perspective view of an article supporting and delivering device which is employed.

Fig. 9 is a detail view of a portion of the carrier locking mechanism.

As shown in the drawings, the outer casing 10 is provided with a removable front side 11 having inspection windows 12 and 13, a package delivery opening 14 adjacent its lower end and a coin slot 15. The machine as a whole is independent of the casing and is adapted to be inserted therein from the front, and comprises a pair of vertical side plates 17 and 18, between which an endless chain carrier 19 is mounted to be driven vertically about a pair of sprockets 20, 21 arranged directly one over the other, the operating mechanism therefor being principally supported on a partition 22, which is mounted on the side plate 17 in parallel relation thereto and at a short distance therefrom.

The machine illustrated is primarily designed for dispensing small packages such as candy bars, all of the same kind, and the carrier 19 for holding these packages comprises a series of pivotally connected carrier sections, each consisting of a pair of parallel shelves 24 and a connecting bottom 25, each having projecting ears which overlap ears on adjacent sections and are connected by pivot rods 26, the ends of which project into vertical guide ways 27 on the side plates 17, 18.

In the present instance the carrier sections are elongated axially or transversely of the carrier, and a partition 28 is provided between each pair of shelves transversely thereof and midway between their ends, dividing each carrier section into two compartments

arranged longitudinally of its shelves, each of which open outwardly from the carrier, so that, when a shelf is held in a position in which it is inclined downwardly from its bottom, an article supported thereon in either compartment may slide therefrom by gravity.

The sprockets 20, 21 each have four arms arranged 90° apart and have notches in their ends to receive the connecting pivot rods 26 and the lower sprocket 20 has its shaft 30 extended thru the side plates and the partition 22, and an actuating wheel 32 is mounted thereon. In the present instance said wheel 32 is provided with eight regularly spaced and circularly arranged lugs 33 and a corresponding series of peripheral notches 34.

The operating means for the carrier comprises an operating lever 35, of bell crank type, which is mounted on partition 22 by a pivot 36, one end of said lever projecting beyond the front of the casing and the opposite end being engaged with a lug 37 on a slide 38, which is mounted for reciprocation horizontally on the partition 22, said slide having a pawl 39 thereon arranged to engage one of the lugs 33 on the wheel 32, so that, on each movement of the slide by lever 35 from its initial position of Fig. 6 to its extreme position, the wheel 32 will be rotated one eighth of a revolution.

That is, the arrangement is such that, on each operative movement of the operating lever, during which it is depressed to its fullest extent and is released, so that a spring 40 attached to the slide 38, returns the parts to their initial positions, the lower sprocket wheel 20 will be rotated thru 45°, from the position of Fig. 3, in which the arms of wheel 20 will be disposed at 45° from the horizontal or perpendicular, to the position of Fig. 2, in which one pair of arms will be disposed horizontally and the other vertically. Each section of the carrier will thus be held successively, first in a position in which its shelves will be held horizontally and its contents will be in position for inspection thru the window in opening 14, second, in a position in which the shelves will extend downward at an angle of approximately 45° from the horizontal, and third in a position which the shelves will depend vertically. When held in either of the last two positions, a package supported in the section may be delivered therefrom by gravity. In this connection a support 42 is provided which consists of a curved metal plate which extends across the space between and is secured to the front edges of the sides 17 and 18, and extends downward between said sides from a point at, or slightly above the level of the shaft of the lower sprocket 20, the portion 43 of said support which is in front of the right hand half of the carrier, or the right hand compartment of each section, being extended down to the level of the top shelf of a compartment when in the second position above referred to, and the portion 44 of said support, which is in front of the left hand compartments of the carrier, being extended down to the position of the outer end of the top shelf when in the third position above referred to.

As thus arranged, assuming a package for delivery has been placed in both compartments of a section, these packages will be visible thru the opening 13 in the first position above referred to. When the lever 35 is operated, so that the sprocket 20 is rotated thru 45°, the section is moved to the second position, and the package in the right hand compartment will then no longer be supported by the supporting portion 43, so that it will slide from the shelf and be delivered to the purchaser. For the purpose of facilitating delivery, the machine is provided with delivery plate 45, which is inclined downwardly to the delivery opening 14 and a deflector plate 46 is mounted on the front side of the casing in position to deflect the package rearward, as it slides from the shelf when in said second position, onto the plate 45.

In the meantime the package in the left hand compartment of the section will be retained therein by the supporting portion 44, but when the section is moved to the third position, shown in Fig. 3, the package will no longer be supported by the portion 44, so that it will fall therefrom and be delivered at opening 14. A fixed partition 47 is provided between the sides 17, 18, which extends rearward and upward in a curved direction in proximity to the path of the edges of the shelves, as they are moved upward beneath the lower sprocket from the third position above referred to, or in a position to prevent access to the compartment, thru the opening 14.

The mechanism shown for controlling the main operating lever constitutes no part of the present invention, but will be briefly referred to. The forward movement of the slide 38 by the lever 35 is normally prevented by a pivoted latch or hook 50, which engages a lug 51 on the slide before the latter has been advanced sufficiently to engage the wheel 32, but if a coin placed in the entrance slot 15 passes the coin tester 54 and falls onto the slide 38, the latter, as it is advanced, will force the coin against a finger 55 on the latch, lifting the same, so that the slide may be moved to its extreme forward position, thereby causing the 45° rotation of the wheel. The wheel is also normally locked against rotation by a locking pawl 56, which is lifted by the engagement of a head 57 on the slide 38 with a dog 58 on the pawl, as the slide is advanced beyond the position in which it will be intercepted by the latch 50. A bracket 60 on the slide 38 is arranged to extend between the lugs 33 on wheel 32,

to prevent rotation of the wheel during the rearward movement of the slide before the pawl 56 falls into locking engagement with the wheel, so that removal of packages without inserting a coin will be prevented.

With the above described construction the operating lever may be depressed and a package delivered first from one compartment of the carrier section, and then from the other, each time a coin of suitable denomination is inserted.

It will be apparent that if the shelves were to be divided into three compartments instead of two, the machine would be modified correspondingly, i. e. the support 42 would be modified to provide for three discharging positions and the wheel 32 would be arranged to be rotated thru 30° on each operation of lever 35.

I claim:

1. In a dispensing machine, an endless carrier arranged to be driven vertically about a horizontal axis and having a series of axially elongated shelves, projecting radially therefrom in spaced relation, each shelf being arranged to support a predetermined plurality of articles on different longitudinal portions thereof and to deliver the same by gravity when the shelf is in a depending position below the level of said axis, an operating device arranged, by successive operations thereof, to advance said carrier to a succession of delivery positions for each shelf corresponding to the number of articles to be delivered therefrom, and a support disposed below the level of said axis and extending in proximity to the path of movement of the outer edges of said shelves in position to support the articles on the shelves as they are advanced to said delivery positions and permitting successive delivery of the articles on each shelf in the several delivery positions thereof.

2. In a dispensing machine, an endless carrier arranged to be driven vertically about a horizontal axis and having a series of axially elongated shelves projecting radially therefrom in spaced relation, said shelves having transverse partitions dividing each shelf into a plurality of article holding compartments occupying different longitudinal portions thereof from which articles supported therein may be delivered by gravity when the shelf is in a depending position below the level of said axis, an operating device arranged by successive operations thereof to advance said carrier to a succession of delivery positions for each shelf corresponding to the number of said compartments thereof, and a support disposed below the level of said axis and extending downwardly in proximity to the path of movement of the outer edges of said shelves in position to support the articles on the shelves as they are advanced to said delivery positions and terminating to permit successive delivery thereof from each shelf in the several delivery positions thereof.

3. In a dispensing machine, an endless carrier arranged to be driven vertically about a horizontal axis and having a series of axially elongated shelves, projecting radially therefrom in spaced relation, each shelf being arranged to support a predetermined plurality of articles on different longitudinal portions thereof and to deliver the same by gravity when the shelf is in a depending position below the level of said axis, an operating device arranged by successive operations thereof to advance said carrier to a succession of delivery positions for each shelf corresponding to the number of articles to be delivered therefrom, and a support mounted in front of said carrier and extending downwardly and rearwardly in proximity to the path of movement of the outer edges of said shelves from approximately the level of said axis, the different portions thereof being extended respectively to the several delivery positions of each shelf, whereby as the shelf is moved into its successive delivery positions the articles thereon will be moved beyond the corresponding portions of the support and be successively delivered.

4. In a dispensing machine, an endless chain carrier arranged to be driven vertically and having a sprocket about which it is driven at the lower portion of its travel, said carrier having a series of suitably spaced shelves projecting radially and elongated axially with relation to said sprocket, each shelf being arranged to support a pair of articles to be vended on the opposite longitudinal portions thereof, an operating device arranged by successive operations thereof to advance said carrier to move each shelf successively from a position in front of said sprocket to two successive delivery positions beneath the same, in which the articles thereon may be discharged therefrom by gravity and during which said sprocket will be caused to make one fourth of a revolution, and a support extended beneath the sprocket in position to support one of the articles until the shelf is moved into the first of said delivery positions and to support the other article until the shelf is moved into the second of said positions.

In testimony whereof, I have signed my name to this specification.

ARTHUR H. DU GRENIER.