July 30, 1940.

C. H. NOLTE

2,209,535

REPRODUCTION OF RECORDS

Filed Dec. 4, 1937

8 Sheets-Sheet 1

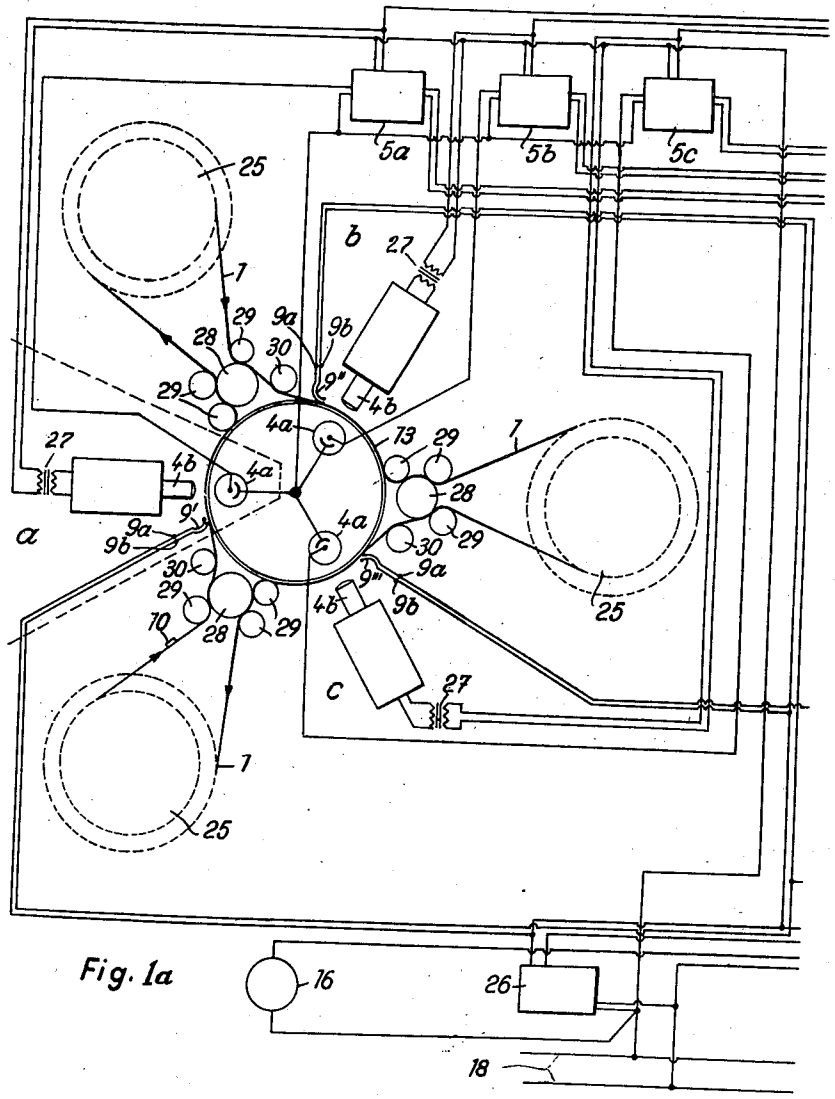

Fig. 1a

Inventor

Carl Hans Nolte

By

Attorney

July 30, 1940.

C. H. NOLTE

2,209,535

REPRODUCTION OF RECORDS

Filed Dec. 4, 1937

8 Sheets-Sheet 2

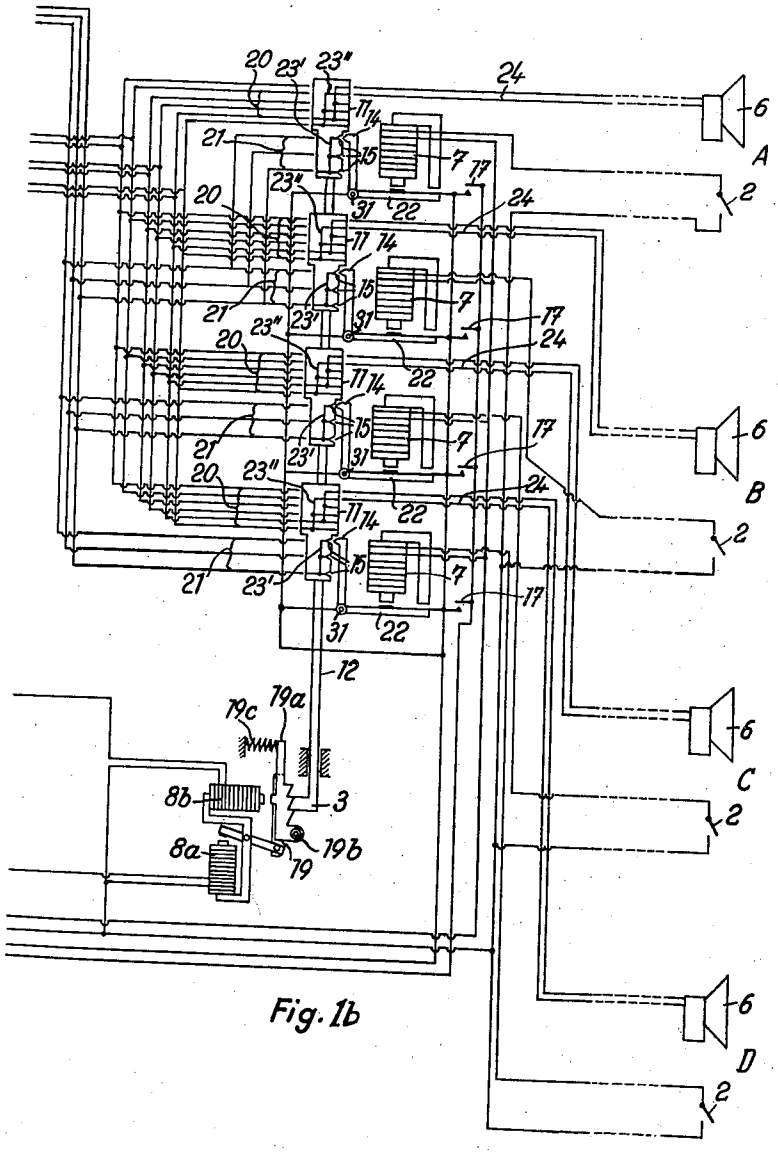

Fig. 1b

Inventor

Carl Hans Nolte

By

Attorney

July 30, 1940.

C. H. NOLTE

2,209,535

REPRODUCTION OF RECORDS

Filed Dec. 4, 1937

8 Sheets-Sheet 3

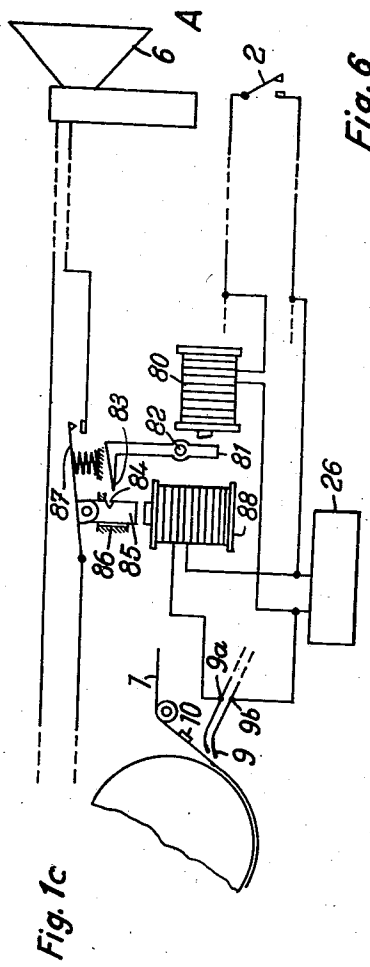

Fig. 1c

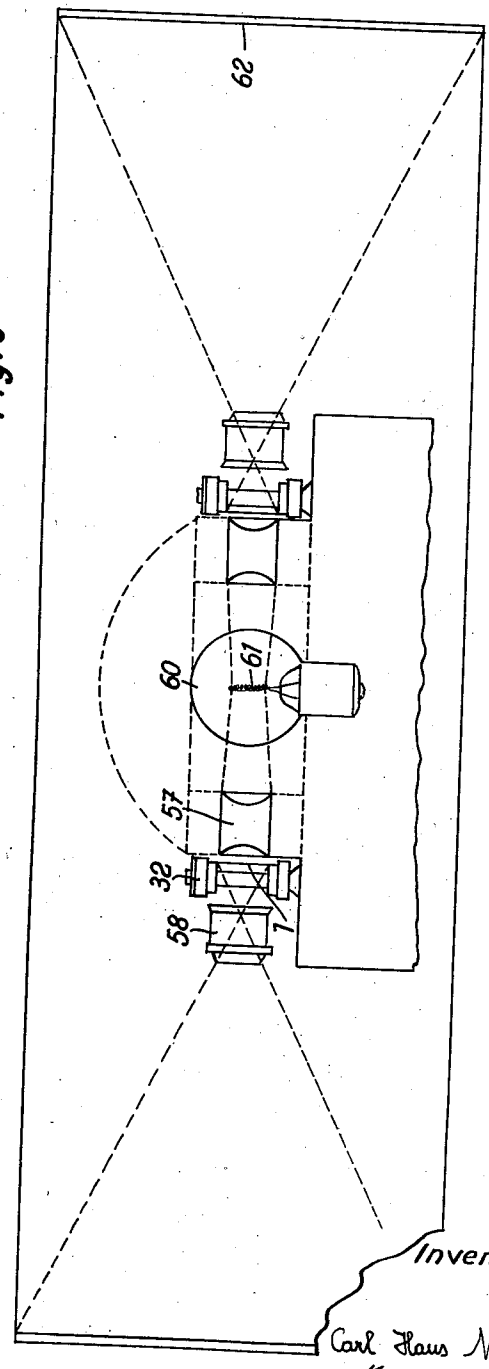

Fig. 6

Inventor

Carl Hans Nolte

By Carl Nau

Attorney

July 30, 1940. C. H. NOLTE 2,209,535

REPRODUCTION OF RECORDS

Filed Dec. 4, 1937 8 Sheets-Sheet 4

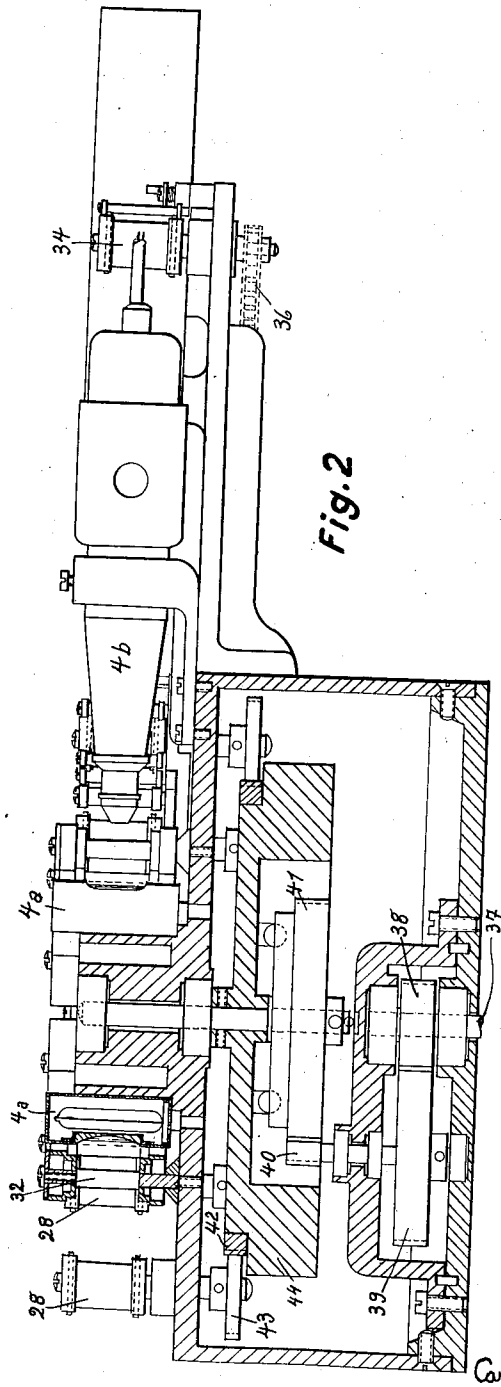

Fig. 2

Inventor

Carl Hans Nolte

By

Attorney

July 30, 1940.

C. H. NOLTE

2,209,535

REPRODUCTION OF RECORDS

Filed Dec. 4, 1937

8 Sheets-Sheet 5

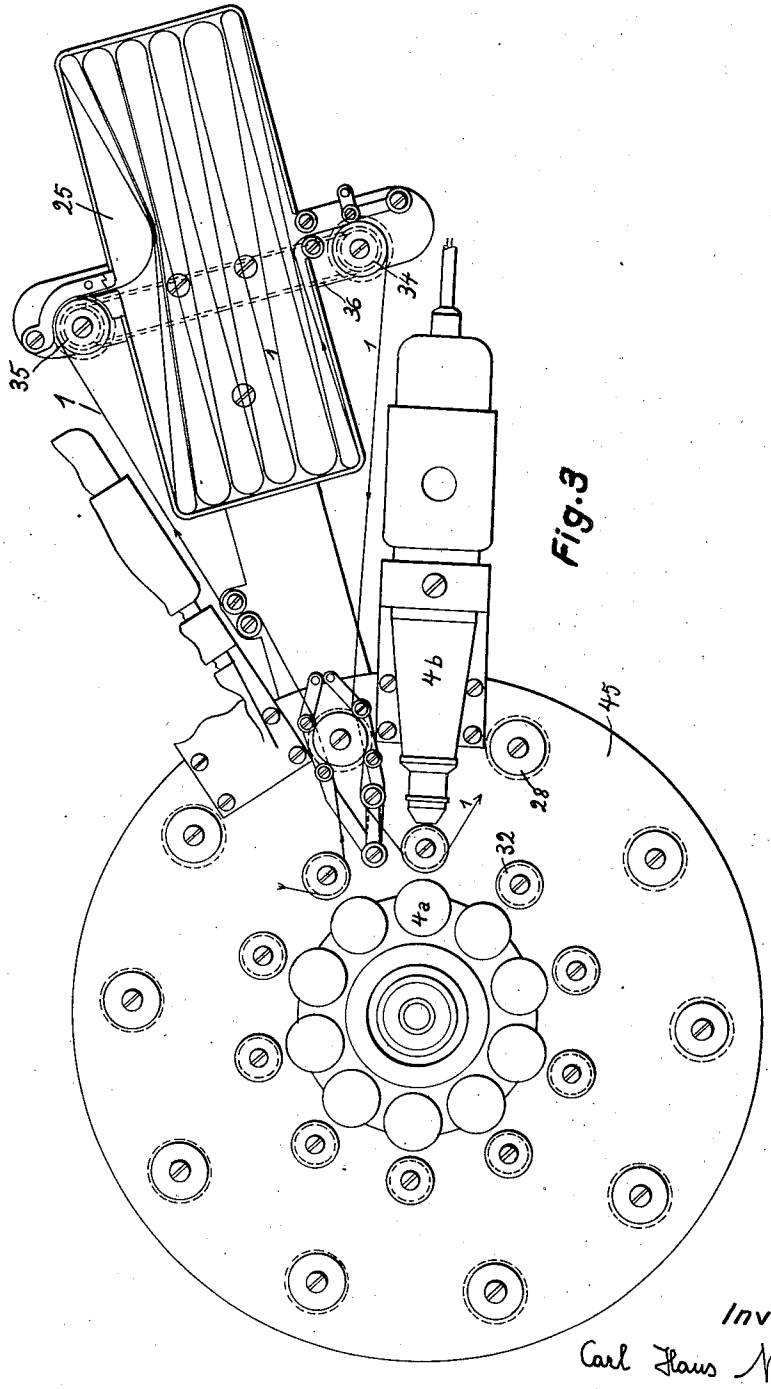

Fig. 3

Inventor

Carl Hans Nolte

By

Karl Nau

Attorney

July 30, 1940. C. H. NOLTE 2,209,535

REPRODUCTION OF RECORDS

Filed Dec. 4, 1937 8 Sheets-Sheet 6

Fig. 4

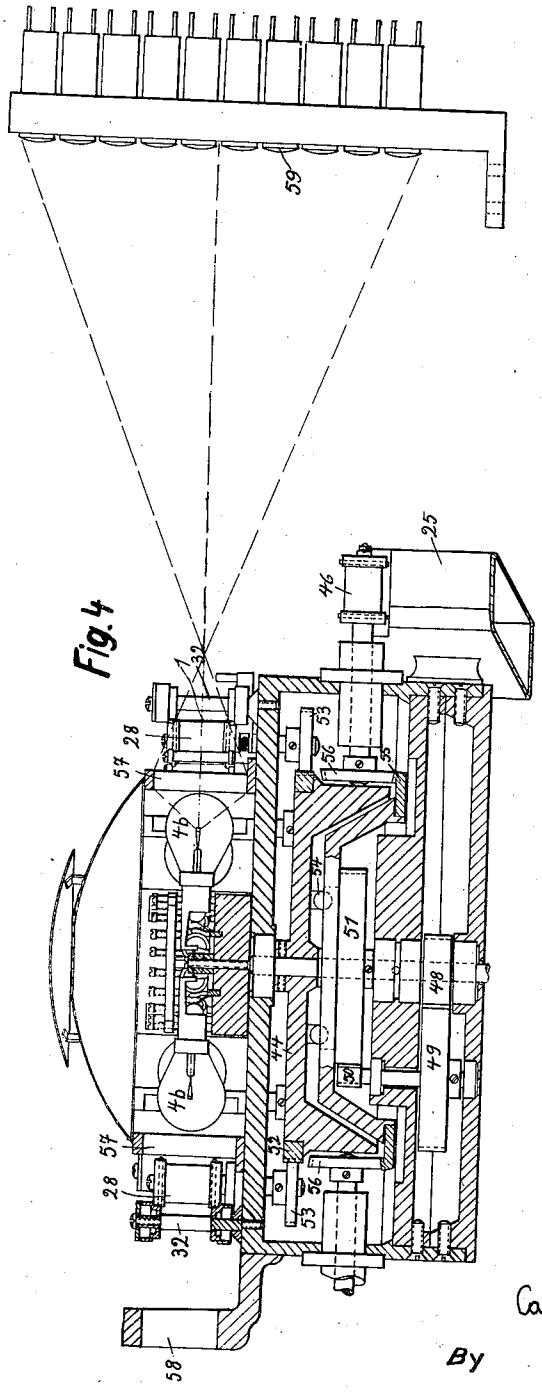

Inventor

Carl Hans Nolte

By

Attorney

July 30, 1940. C. H. NOLTE 2,209,535

REPRODUCTION OF RECORDS

Filed Dec. 4, 1937 8 Sheets-Sheet 7

Fig.5

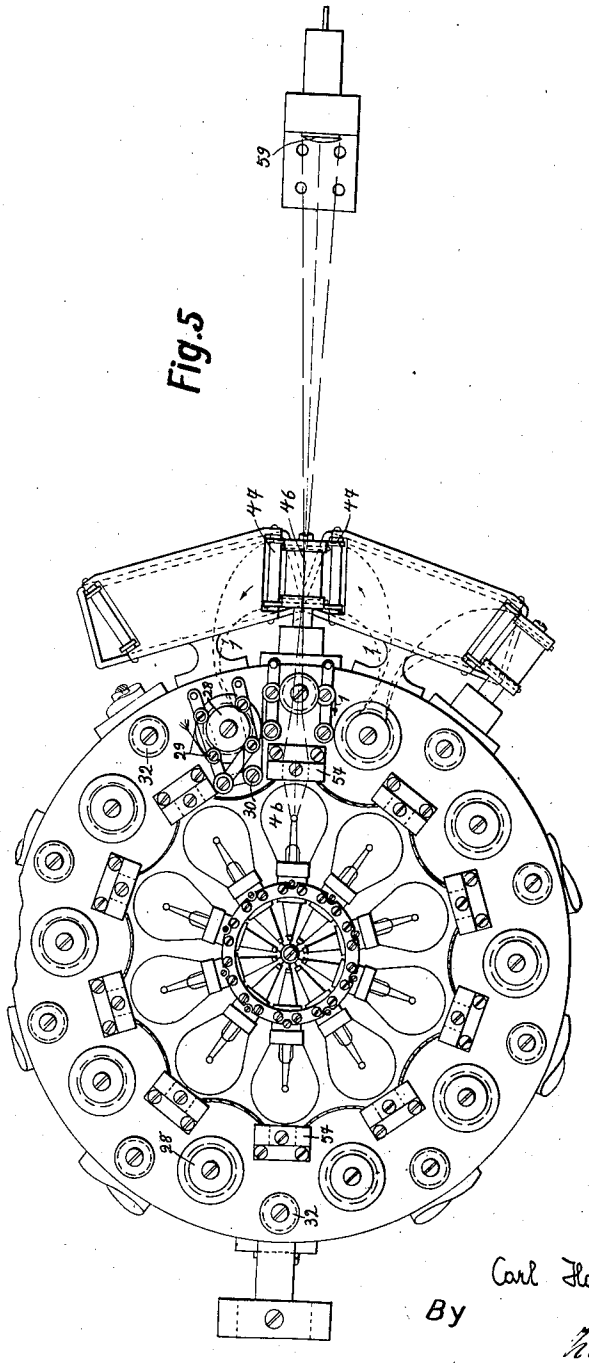

Inventor
Carl Hans Nolte
By
Karl Nau
Attorney

July 30, 1940. C. H. NOLTE 2,209,535

REPRODUCTION OF RECORDS

Filed Dec. 4, 1937 8 Sheets-Sheet 8

Fig. 7

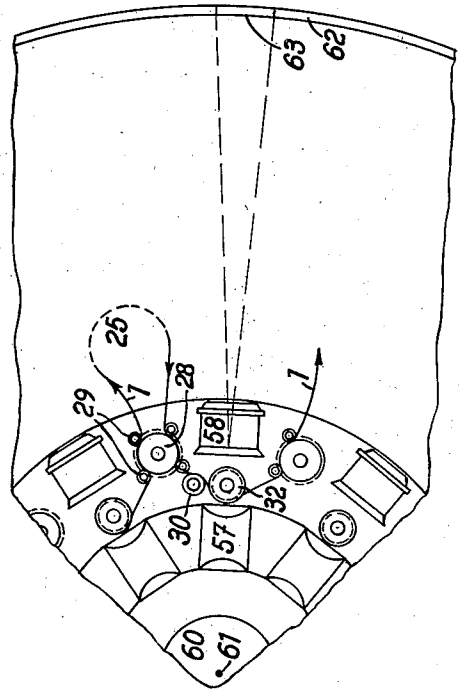

Inventor

Carl Hans Nolte

By

Attorney

Patented July 30, 1940 2,209,535

UNITED STATES PATENT OFFICE

2,209,535

REPRODUCTION OF RECORDS

Carl Hans Nolte, Berlin, Germany

Application December 4, 1937, Serial No. 178,038
In Germany December 5, 1936

10 Claims. (Cl. 179—100.3)

This invention relates to a system for and a method of reproducing records such as sound or cinematographic films or the like.

An object of the invention is the provision of means for reproducing such records at a plurality of remote places, such as by way of a telephone exchange over an existing telephone communication system.

Another object is to enable a subscriber whenever he desires to receive a transmission to automatically obtain the starting point of the program or other transmission with a minimum time delay substantially less than the total duration of the particular program or transmission to be received.

Further objects and details will become more apparent from the following description taken with reference to the accompanying drawings illustrating several preferred embodiments of systems and apparatus according to the invention and wherein:

Figure 1*a* is a partial diagram showing schematically an embodiment of the pick-up or scanning arrangement for a transmitting apparatus according to the invention,

Figure 1*b* is another partial diagram showing the switching system and subscriber circuits associated with the transmitting arrangement shown in Figure 1*a*,

Figure 1*c* shows a partial circuit for the system according to Figures 1*a* and 1*b*.

Figure 2 is a side view partly in cross-section of a practical construction of a transmitting apparatus,

Figure 3 is a plan view of the apparatus shown in Figure 2,

Figure 4 is a cross-sectional view of a modified form of transmitting apparatus,

Figure 5 is a plan view of the apparatus shown in Figure 4,

Figure 6 is a schematic side view of a modified apparatus of the type shown in Figure 4, and

Figure 7 is a fractional plan view of the apparatus shown in Figure 6.

Like reference characters identify like parts throughout the different views of the drawings.

Referring more particularly to Figures 1*a* and 1*b* showing an arrangement for three subscribers there is provided a sound carrier in the form of an endless film band 1. It has been assumed for the sake of simplicity that only a single sound track is recorded on the film 1, although any desired number of parallel sound tracks may be provided. At the points where the sound currents reproduced from the film 1 and transmitted for instance over an ordinary telephone system, are to be received, reproducers 6 such as telephone receivers or loudspeakers are provided in conjunction with suitable switching devices such as switching dials or the like as indicated at 2. A single switch contact has been shown for each device 2 to simplify the drawings, but as will be understood a switch with a plurality of contacts may be provided for selecting any one of a plurality of musical scores or other recorded transmissions which it is desired to receive.

The endless film band 1 is passed through three magazines or containers 25 which may be of the type as shown in greater detail in Figure 3 or of any other suitable construction to accommodate an increased length of film arranged in loop formation or in any other suitable manner. These containers are symmetrically arranged and contain each in the example shown one-third of the whole film length minus the lengths of film in the three reproducing systems. Each of the reproducing systems comprises three pressure rollers 29, a driving roller or sprocket 28 and a tension roller 30. These rollers serve to hold the film in tight engagement with a central sound or scanning drum 13 provided with an annular sound gate or slot in a manner well understood. Three lamps 4*b* in conjunction with suitable optical systems and physical light slits of known construction are arranged symmetrically about the drum 13, opposite three photoelectric devices 4*a* located inside the drum. The lamp systems 4*b* are energized, through transformers 27 and a relay switching system shown in Figure 1*b* and to be hereinafter described, from a source of alternating current indicated at 18. In a similar manner, three amplifiers 5*a*, 5*b* and 5*c* each energized by the output of one of the three photoelectric devices 4*a*, are provided with operating potential from the source of current 18. The reproducing system is rotated by a power shaft driven by a motor 16 preferably also energized by the source of current 18 and controlled through the relay system in a manner described in detail hereinafter.

Referring to the relay and switching systems shown in Figure 1*b*, there are provided four switching members 11 of insulating material slidably and resiliently mounted upon a common switching rod 12 in such a manner that they can be moved axially on the rod 12 but tend to return to their original position on the rod 12 such as under action of helical springs mounted inside the members 11 and pressing the members 11 upwardly against stops or lateral projections of the

rod 12 (not shown). Contact bars 23' and 23'' are fixedly mounted on the insulating body 11 and electrically interconnected in the manner shown in the drawings. Contact brushes or springs 20, 21 and 24 are arranged opposite the members 11 in such a manner as to be able to engage and establish electric contact with the bars 23' and 23'' depending on the position of the members 11. The contact springs 20, 21, 24 serve to connect the amplifiers 5a, 5b and 5c and the respective lamp systems 4b and loudspeakers 6 with each other and with the source of current 18, by operating the switches 2 and depending on the position of the members 11, as will be further understood from the following.

The endless film band 1 is provided with an electrically conducting contact 10 which when passing under pairs of adjacent contact springs 9', 9'' and 9''' will close an electric circuit. The contact springs 9' and 9'' when connected by the contact 10 will cause a first relay 8a to be energized from the source of current 18 by way of rectifier 26, while the contact springs 9''' when connected by the contact 10, will cause energization of a further relay 8b in a similar manner. Thus, each time the contact 10 passes the springs 9', the armature of the relay 8a will be attracted and the ratchet 19 by its respective tooth will engage the projection or nose 3 of the switching rod 12 thereby raising the latter through one step together with the switching members 11, insofar as the latter are not locked by their associate locking elements 14. The latter are arranged to engage recesses 15 in the switching members 11 in a manner to be described hereinafter. The ratchet 19 having an extension 19a is arranged to swing about a fixed pivot 19b against the action of a spring 19c, whereby the rod 12 is held in its raised position until the member 19a is released by the relay 8b. The same thing happens when the second set of contact springs 9'' is short-circuited by the contact 10 on the film and the rod 12 is raised by another step. The contact springs 9''' on the other hand when short-circuited by the contact 10 will cause energization of the relay 8b which will attract the ratchet 19 and extension 19a, thus releasing the nose 3 and allowing the rod 12 to drop to its lowermost position by the action of gravity together with the switching members 11, insofar as the latter are not locked in position by the elements 14. The up-and-down movement of the rod 12 is repeated each time the contact 10 has completed a full trip around the whole film path, back to its position shown in the drawing, i. e., just ahead of the springs 9'.

Associated with each switch 2 is a relay 7 energized when the respective switch is closed from the source of current 18 through the rectifier 26. As long as the switch is held in its closed position, the relay will attract its armature 22 whereby a lever 14 is swung around its pivot 31 in an anticlockwise direction so that the nose 14 engages the recess 15 in the members 11 which is just opposite to it, depending on the operation of the relay 8a and 8b and the position of the contact 10 in the scanning system. At the same time the respective switch 17 is closed whereby the motor 16 is connected to the source of current 18 and started to drive the scanning apparatus. Through the respective nose 14, recess 15, contact bars 23' and contact springs 21 on the one hand and the contact springs 24, contact bars 23'' and contact springs 20, the loud speaker 6 coordinated to the respective closed switch 2 will be connected to the particular amplifier and reproducing system (which at the same time is placed in operative condition if it was not yet in operation) which at the moment of closing the respective switch 2 is due to be passed next by the contact 10 arranged at the starting point of the program or record on the film 1 to be received.

Figure 1c shows an additional partial circuit for the system shown in Figures 1a and 1b and serving to connect the loudspeaker 6 only when the starting point of the record arrives at the respective reproducing system. To this end, a relay 80 is provided which, when the switch 2 is closed, is energized from the source of current 18 through rectifier 26, and will attract an arm 81 of a lever pivotally mounted at 82 and capable of engaging by its nose 83 a recess 84 of a member 85 slidably mounted at 86 and secured to a contact lever 87. Another relay 88 is energized from the source of current 18, through the rectifier 26 when any of the sets of contact springs 9', 9'', 9''' are short-circuited by the contact 10 on the film 1. This relay will attract the member 85, whereby the switch 87 is closed and the loudspeaker 6 connected to the respective amplifier. The switch 87 is then held in its closed position after the current impulse by which the relay 88 has been energized has ceased by the action of the nose 83 which on attraction of the member 85 by the magnet 88 has engaged the recess 84. When the switch 2 is opened by the subscriber, the recess 84 will be disengaged from the nose 83 and the switch lever 87 will be lifted under the action of the spring 89 thereby disconnecting the respective loudspeaker 6.

It will be apparent from the foregoing that by means of a system described each subscriber provided with a switching device 2 and a reproducer 6 is enabled to receive at any moment the sound or other matter recorded on the film 1 in such a manner as to automatically obtain the start of the program, musical score, lecture or the like after a waiting period corresponding at the most to the total duration of the record divided by the number of reproducing systems used. Thus, in the embodiment shown in Figures 1a and 1b, this maximum waiting time will amount to one third of the total playing time of the entire record. In brief, the operation of the system shown in Figures 1a–1c is as follows:

In the position shown all the switching members 11 are connected to the amplifier 5a and its associate scanning or pick-up system 4a, 4b through the lower pair of sliding contacts 20 and the contact elements 23'' of the switching members 11. If now one of the switches is closed by a subscriber, at first the motor 16 driving the film 1 is started—if it was not running already—and the corresponding scanning lamp 4b is lit through the action of the relay 7 belonging to the respective subscriber station.

The corresponding loudspeaker 6 will remain disconnected by the action of a blocking arrangement shown in Figure 1c until the contact 10 on the film 1 passes the spring contacts 9', thereby connecting the loudspeaker of the subscriber when the starting point of the record on the film enters the respective pick-up system 4a, 4b, while at the same time disconnecting the other subscribers from the amplifier 5a and associate pick-up system 4a, 4b by lifting the switching rod 12 by one step through the energization of the relay 8a in the manner described hereinbefore.

In this manner all switching members 11 except the one pertaining to the switch 2 being depressed are disconnected from the amplifier 5a

and associate pick-up system and connected to the amplifier 5b and associate pick-up system next to be passed by the starting contact 10 of the film 1. This connection is by way of the next following pair of sliding contacts 20 engaging the contact members 23'' of the switching members 11. The switching member 11 pertaining to the subscriber whose key 2 has been depressed is locked in position by the lever 14 engaging the upper notch in the lower part of the switching member 11, thus preventing the latter from being moved in an upward direction by the rod 12 due to its slidable and resilient mounting upon the rod in the manner described.

If now another subscriber presses his key 2, the amplifier 5b and associate pick-up system 4a, 4b next to be passed by the starting contact 10 on the film 1 will be energized and prepared to start reproduction when the starting contact 10 passes the springs 9'' in a manner understood from the above.

In the same manner a third subscriber may be connected to the amplifier 5c and associate pick-up system and the arrangement extended for any number of subscriber stations.

In the foregoing arrangement anyone of a large number of subscribers, i. e., more than three as shown in the drawings for the sake of illustration will be connected to the next free amplifier and pick-up system to be passed by the starting point on the record carrier. Before passing the last pick-up system, the switching rod 12 is returned to its starting position by the energization of the relay 8b by the closing of its exciting circuit by the contact springs 9''' and the contact 10 on the film 1. In this manner the switching rod 12 is returned to starting position each time the film is completing a full passage through all the pick-up systems, thus restoring the switching members which have been disconnected in the meantime to a position for renewed operation.

In the embodiment according to Figures 2 and 3 the common sound gate 13 of Figure 1 has been replaced by a plurality of scanning drums 32 corresponding to the number of reproducing systems 4a, 4b. In the example shown, ten symmetrically arranged reproducing systems are mounted upon a common support 45, thus reducing the waiting time required to obtain the beginning of the program to one tenth of the total duration of the program. A storage device or film magazine 25 is shown in section consisting of a flat hollow casing being somewhat wider than the film and through which the film passes in the form of loose loops in such a manner as to occupy the entire space of the container 25. Rollers 34 and 35 are provided at the ingress and egress openings of the film magazines being connected by an endless chain 36 so that the roller 34 driven by the film 1 will in turn drive the roller 35 which again in turn will cause the film 1 to be fed into the container to the same extent as it is drawn out at the egress roller 34.

It will be understood that the motor (not shown) rotates the driving rollers 28 by way of the shaft 37 and gears 38, 39, 40, 41, 42 and 43. The toothed rim 42 is connected to or integral with a fly wheel 44 so as to ensure a uniform speed of the driving roller 28, in a manner well understood.

Referring to Figures 4 and 5 there is shown a modified construction of a pick-up or reproducing apparatus wherein the lamps 4b are arranged centrally, while the reproducing systems are arranged at the circumference of the system. While ten reproducing systems are actually provided, one such system only has been shown in detail at the right portion of Figures 4 and 5. The scanning rollers 32 and the sound gate are mounted near the circumference of the common mounting plate 45 together with their associate pressure rollers 29 and tension rollers 30. The endless film band in this case passes through vertical casings 25 which may be of the same type as shown in Figure 3. A roller 46 is arranged between each two casings 25, together with associate pressure rollers 47. The rollers 46 in this case are directly driven from the motor in the manner hereinafter described, to feed the film with a free loop to the pick-up points and to avoid that the driving roller 28 has to draw the film out of the casing.

The motor (not shown) in this case drives the driving rollers 28 through gears 48, 49, 50, 51, 52 and 53, a fly wheel 44 being provided in a manner similar to that of Figure 2. The driving rollers 46, on the other hand, are driven from the gear wheel 51, through the gears 55, 56. The driving energy is transferred, from the wheel 52 through a helical spring 54 to the fly wheel 44, whereby a very smooth operation of the driving rollers 28 is ensured, irrespective of any shocks produced in other parts of the driving system or at the roller 46.

The light rays emitted by each source of light 4b are projected, through the condenser 57, sound gate 32, objective 58, and projected upon ten cell systems 59 arranged vertically above one another so as to be illuminated by a common light beam produced by a slit (not shown). The latter which represents an optical image point may be arranged at any suitable point such as directly in front of the photo cells 59 or immediately adjacent to the film 1. Instead of a vertical arrangement of the cells 59, the latter may be arranged obliquely or horizontally, if desired.

It will be understood that by means of an arrangement shown in Figures 4 and 5, ten parallel sound tracks arranged on the same film 1 can be reproduced at the same time by means of ten superposed photo cells 59. Thus, ten photo cell systems of ten cells each may be arranged around the reproducing system, making a total of one hundred separate reproducing systems which may operate at the same time.

Referring to Figures 6 and 7 the arrangement shown is substantially the same as that according to Figures 4 and 5 except for the provision of a common centrally arranged source of light 60 in place of ten separate lamps. This common lamp 60 is provided with a longitudinal filament 61 in the form of a coiled wire to illuminate the film over its whole width.

A hollow cylinder 62 has been shown in these figures surrounding the reproducing arrangement and forming a support for the photo cells which are arranged on its inner or outer wall or in this wall as at 63, either vertically, obliquely or horizontally one adjacent to the other.

It will be evident that the invention is not limited to the specific details and arrangements of parts shown herein for illustration, but that the underlying idea and novel inventive thought are susceptible of many variations coming within the broader scope of the invention as defined in the appended claims.

I claim:

1. In a sound reproducing system, an elongated endless sound record carrier with driving

means for continuously moving the same, a plurality of electric sound pick-up devices arranged to scan said carrier at successive points of the path thereof spaced from each other at substantially equal distances, a plurality of storage devices each arranged between adjacent pick-up devices adapted to accommodate an increased length of said carrier, a plurality of sound reproducing devices each arranged at a subscriber's place, switch means associated with each reproducer, further switching means associated with said sound carrier and pick-up devices operable when the starting point of the record on said carrier enters said pick-up devices, and an automatic switching arrangement operatively associated with said first and second switch means, whereby the next free pick-up device in the traveling direction of said sound carrier is connected to a reproducer upon operation of the switch means pertaining to the respective subscriber.

2. In a sound reproducing system as claimed in claim 1, wherein said further switching means comprises a plurality of adjacent pairs of contacts sliding upon said carrier, each pair of contacts being arranged ahead of a pick-up device in the traveling direction of said carrier, and a conductive portion at the record starting point upon said carrier adapted to short circuit said pairs of contacts.

3. A reproducing system as claimed in claim 1, wherein said pick-up systems and storage devices are systematically arranged about a common symmetry axis.

4. A reproducing system as claimed in claim 1, wherein said further switching means comprises a mark at the starting point of the record upon said carrier, said mark adapted to control an electric circuit including a relay, said automatic switching arrangement comprising a plurality of switching members each coordinated to one subscriber and reproducing device and adapted to be controlled step-by-step by said relay, and a plurality of locking devices each associated with one of said switching devices and operable to lock the respective switching member upon actuation of the coordinated subscriber switch.

5. In a reproducing system as claimed in claim 1, wherein said record carrier consists of photographic sound film and said pick-up devices are comprised of a plurality of sound lamps arranged symmetrically about a common axis, and a plurality of photoelectric cells also arranged symmetrically about said axis each in operative relation to one of said sound lamps.

6. In a reproducing system as claimed in claim 1, wherein said record carrier consists of a photographic sound film and said pick-up devices are comprised of a common sound lamp and a plurality of photoelectric cells arranged symmetrically about said lamp.

7. In a reproducing system as claimed in claim 1, wherein said storage devices are comprised of flat casings with means for passing the sound carrier therethrough in loop formation.

8. In a sound reproducing system, an elongated record carrier, driving means for moving said record carrier, sound-pick-up means operatively associated with said record carrier, at least one reproducing device connected to said pick-up means, switching means adapted to preset said reproducing device, said record carrier having a mark at the starting point of the record thereon, further switching means cooperating with said mark when the latter enters said pick-up device adapted to effect the final setting of said first switching means to initiate the reproduction of said record by said reproducing device.

9. In a reproducing system, the combination of an endless movable record carrier, a plurality of pick-up systems arranged to simultaneously reproduce the record on said carrier, a plurality of reproducing devices, selective switching means operatively associated with each reproducing device, a control system adapted to connect each reproducing device by the operation of its coordinated switch with the pick-up system which in the travelling direction of said carrier is next to the starting point of the record thereon, and at least one mark on said carrier adapted to actuate said control system and to adjust it to a position corresponding to the position of said mark relative to said pick-up systems.

10. In a reproducing system, an elongated endless record carried, driving means for continuously moving said record carrier, a plurality of pick-up devices operatively associated with said record carrier at points of the path thereof spaced substantially equally from each other, a plurality of reproducing devices each located at the place of a subscriber, a selective switching arrangement interconnecting said pick-up devices and comprising switching members each coordinated to one subscriber, a switch for each subscriber for presetting the respective switching member of said switching arrangement, further switch means associated with each pick-up device and adapted to cooperate with a mark at the starting point of the record of said carrier to complete the setting of a preset switching member and start reproduction at the respective subscriber at the commencement of the subject matter recorded upon said carrier, and means associated with said further switch means for disconnecting the pick-up device in operation from the remaining subscribers and to prepare the next following pick-up device in the traveling direction of said record carrier for connection to any of the remaining subscribers.

CARL HANS NOLTE.