United States Patent

Vaughn

[15] **3,635,083**

[45] **Jan. 18, 1972**

[54] FLUID PRESSURE TIME INTEGRATOR

[72] Inventor: **Thomas R. Vaughn**, 2333 South Patton St., San Pedro, Calif. 90732

[22] Filed: **Sept. 26, 1969**

[21] Appl. No.: **861,348**

[52] **U.S. Cl.** **73/206**, 73/183, 235/61

[51] **Int. Cl.** **G01f 1/02**, G06c 27/00

[58] **Field of Search** 73/183, 206; 235/61

[56] **References Cited**

UNITED STATES PATENTS

2,050,674	8/1936	Stover	73/206
2,077,444	4/1937	Walker	73/206

Primary Examiner—Richard C. Queisser
Assistant Examiner—C. E. Snee, III
Attorney—Robert W. Beach

[57] **ABSTRACT**

A controller applies restoring stress to an oscillator for regulating the frequency of the oscillator in response to a pressure dependent on the flow of fluid to be measured such that the oscillator frequency is proportional to flow rate. The oscillator is connected to drive an indicator actuator. The pressure-responsive controller includes a lever subject to a force produced by the pressure dependent on the fluid flow and such lever tensions a tie connected to a lever of the oscillator. Tensioning the tie urges the oscillating arm towards its centered position. A governor for the oscillating arm has interfering means including a slide carrying ramp surfaces cooperating with ramp surfaces carried by the oscillating arm. The slide is driven to reciprocate lengthwise of the arm. The slide and arm carry valve leaves cooperatively controlling flow of fluid to energize slide-reciprocating mechanism for effecting coaction of the slide and arm ramp surfaces to retard or accelerate movement of the oscillating arm through the central portion of its stroke to prevent overtravel and to sustain oscillation of the arm.

9 Claims, 14 Drawing Figures

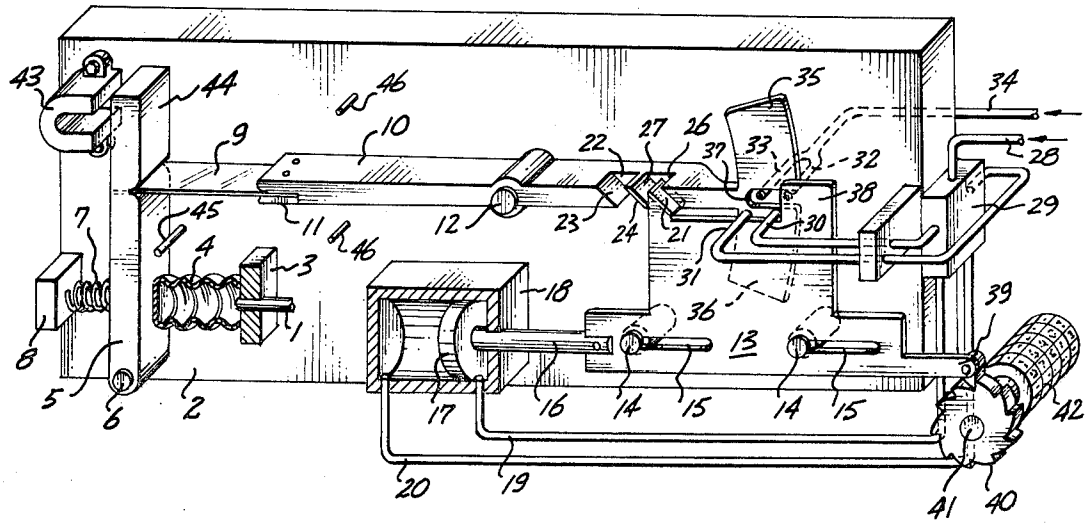

PATENTED JAN 18 1972

3,635,083

SHEET 1 OF 3

Fig. 1.

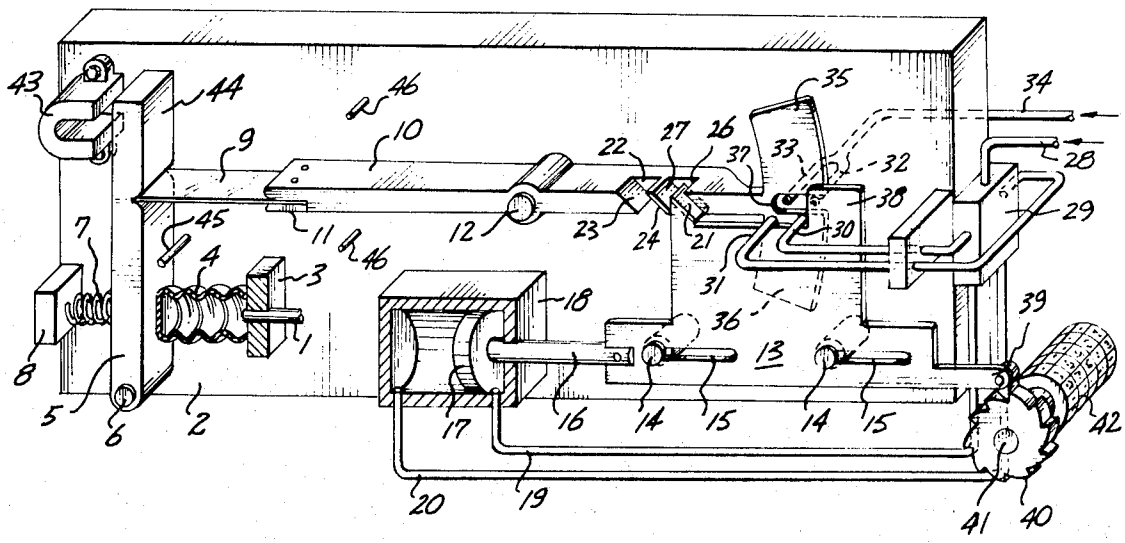

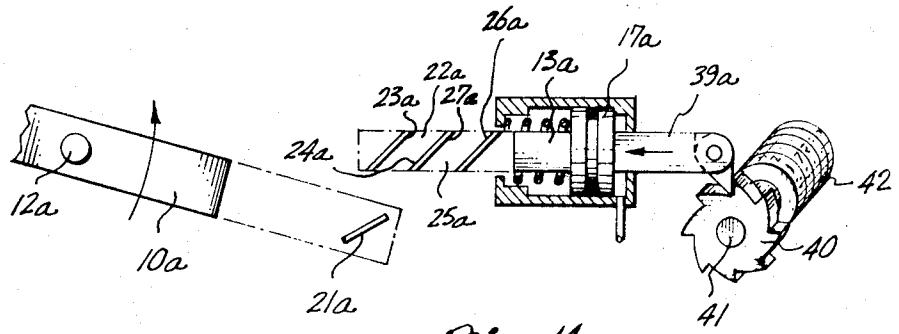

Fig. 4.

INVENTOR
THOMAS R. VAUGHN

BY
Robert W. Beach

ATTORNEY

PATENTED JAN 18 1972

3,635,083

SHEET 2 OF 3

Fig. 2.

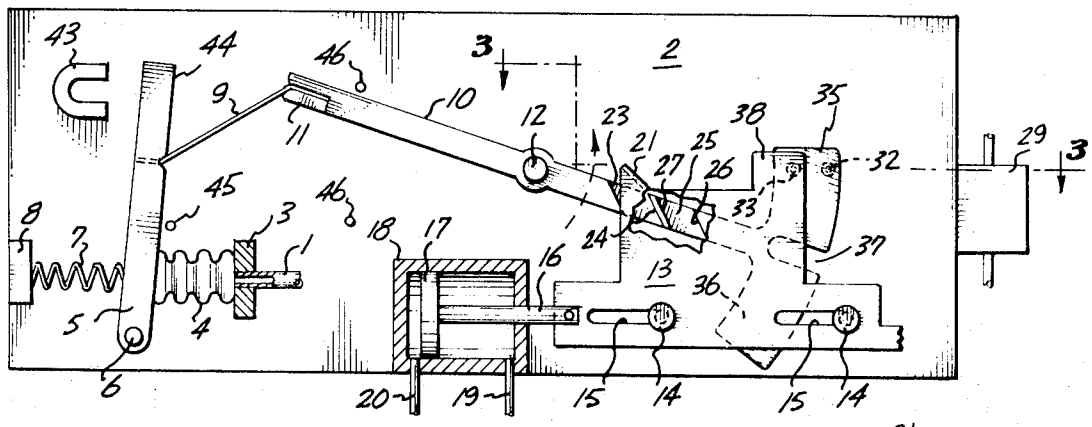

Fig. 3.

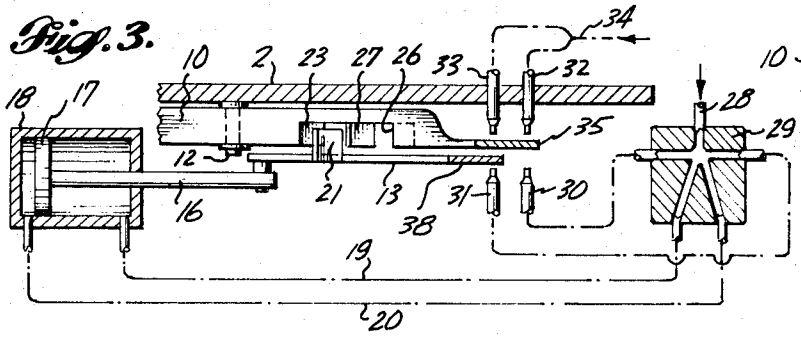

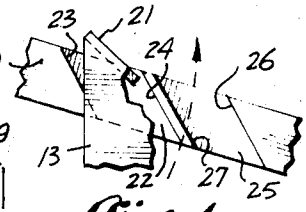

Fig. 4.

Fig. 5.

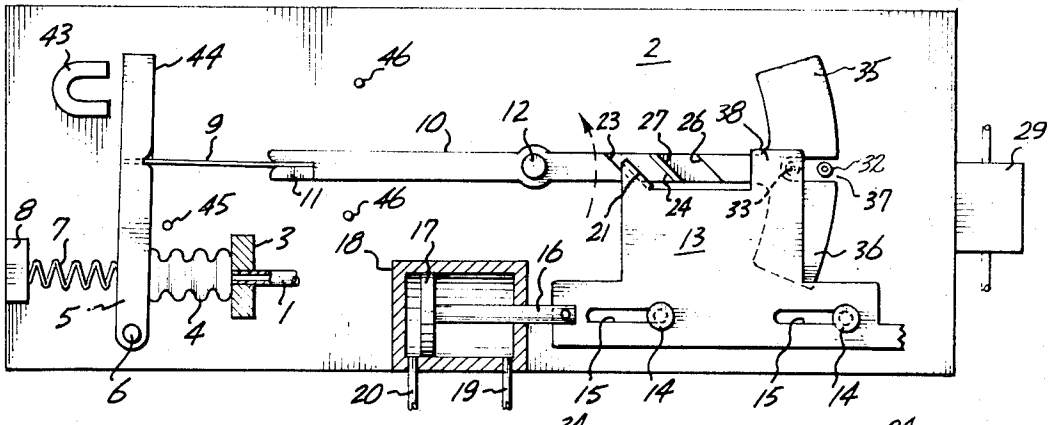

Fig. 6.

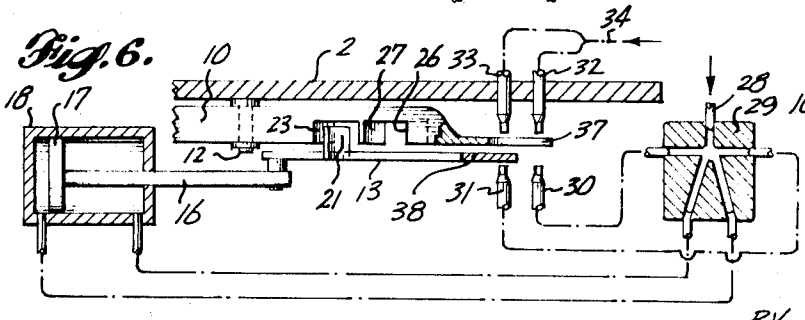

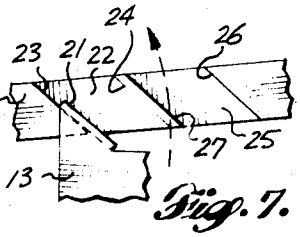

Fig. 7.

INVENTOR.
THOMAS R. VAUGHN
BY Robert W. Beach

ATTORNEY

Fig. 8.

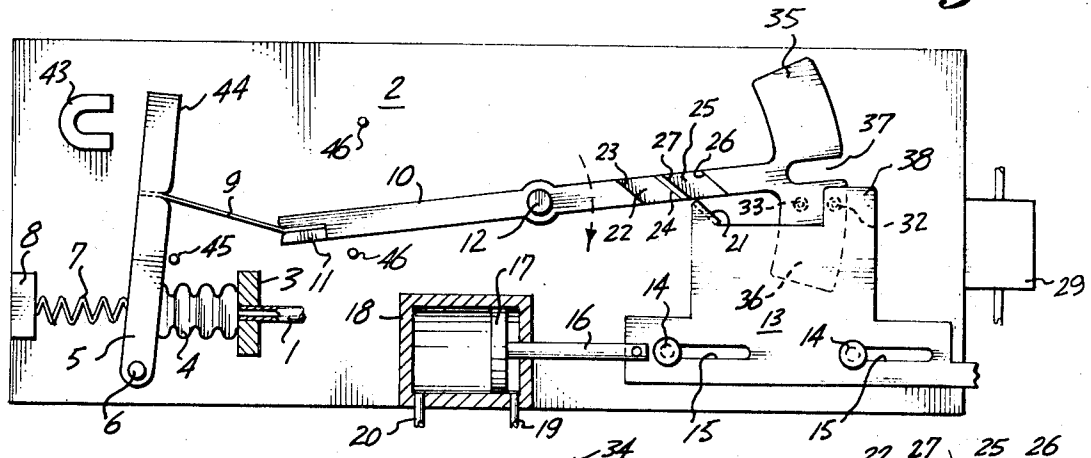

Fig. 9.

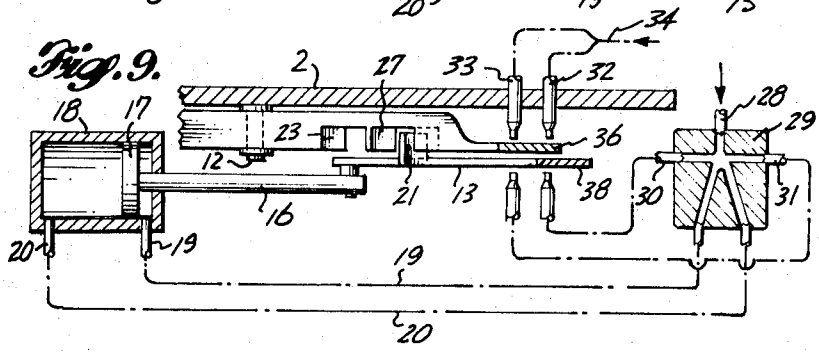

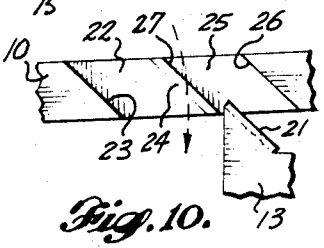

Fig. 10.

Fig. 11.

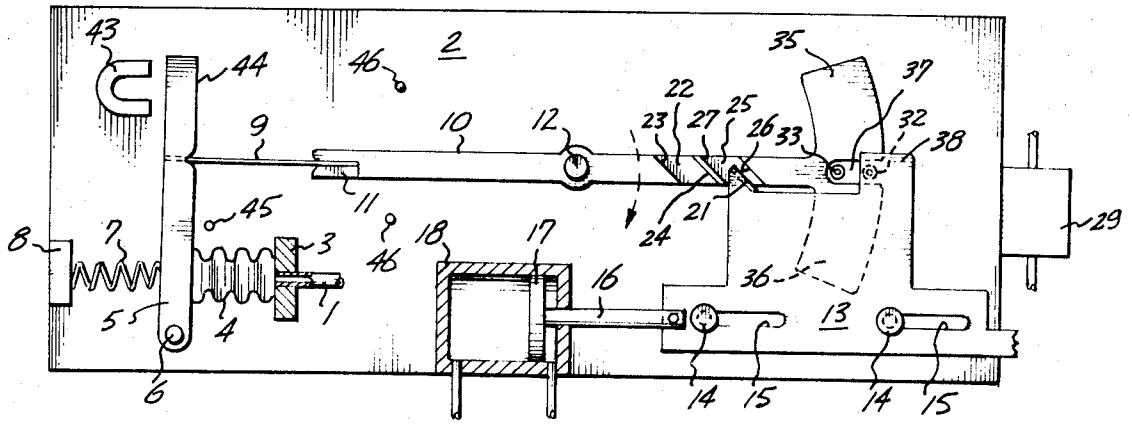

Fig. 12.

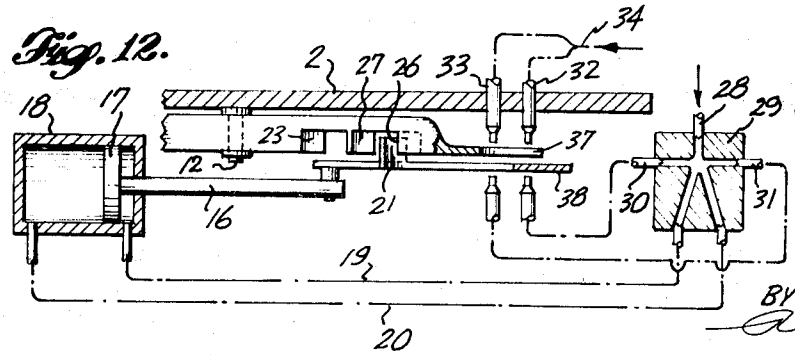

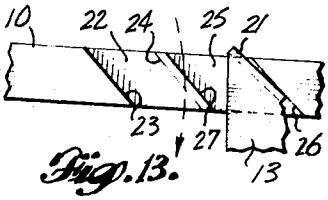

Fig. 13.

INVENTOR
THOMAS R. VAUGHN
BY
Robert W. Beach
ATTORNEY

FLUID PRESSURE TIME INTEGRATOR

The present invention relates to an integrator for integrating pressure dependent on the flow of fluid through a conduit, for example, with respect to time for the purpose of indicating the total quantity of fluid flow through such conduit.

A principal object of the invention is to provide such an integrator which is of simple construction and composed of few parts and which integrator will be compact.

A further object is to provide such an integrator which is of rugged construction yet is accurate and reliable in operation.

Another object is to provide an integrator which will operate continuously despite changes in input pressure and which is sufficiently sensitive to reflect small or rapid changes in flow, or both, so as to provide an accurate indication of flow under all circumstances.

An additional object is to provide an integrator which will operate very economically.

FIG. 1 is a top perspective of representative mechanism.

FIG. 2 is a somewhat diagrammatic elevation of such mechanism and FIG. 3 is a section taken on line 3—3 of FIG. 2.

FIG. 4 is a fragmentary view of a portion of the mechanism shown in FIG. 2 with parts in a different relationship.

FIG. 5 is an elevation similar to FIG. 2 but showing parts in a different relationship and FIG. 6 is a section corresponding to FIG. 3 but with parts in the relationship corresponding to FIG. 5.

FIG. 7 is a fragmentary view corresponding to FIG. 4 but with parts in another relationship.

FIG. 8 is an elevation similar to FIGS. 2 and 5 showing parts in still a different relationship and FIG. 9 is a section similar to FIGS. 3 and 6 with parts in the relationship shown in FIG. 8.

FIG. 10 is a fragmentary view corresponding to FIGS. 4 and 7 showing parts in still a further relationship.

FIG. 11 is an elevation similar to FIGS. 2, 5 and 8, but showing parts in another relationship and FIG. 12 is a section corresponding to FIGS. 3, 6 and 9 with parts in the relationship shown in FIG. 11.

FIG. 13 is a fragmentary view corresponding to FIGS. 4, 7 and 10 showing parts in still another relationship.

A representative use for the integrator of this invention is to indicate the flow of fluid, whether liquid or gas, through a pipeline. Various devices are known for determining the speed of flow of fluid through a conduit by applying pressure-sensing mechanism to such conduit at a particular location. Such pressure-sensing mechanism may, for example, sense the static pressure and the dynamic pressure at such location to provide a pressure differential which varies in relation to the velocity of flow through the pipe. Such a pressure source is relied upon in the operation of the present integrator. To obtain an indication of total flow quantity throughout a predetermined period, such pressure related to velocity of fluid flow in the pipeline is integrated with the time period throughout which the flow quantity is to be determined.

Because devices to provide a fluid pressure which varies in response to the velocity of fluid flow through a pipe are known, means for providing such a fluid pressure source are not described or illustrated in the description of the present invention. Such a pressure fluid source is connected to the conduit 1 of integrator frequency controller mechanism. Such conduit is supported from a mounting 2 by a conduit support block 3. This conduit is connected to a bellows 4 which converts the fluid pressure into an integrator frequency controlling force.

The force produced by the bellows 4 is exerted on one side of a speed controller lever 5 mounted by pivot 6 on the mounting 2. The force exerted on one side of the lever by the bellows 4 is opposed by the force exerted on the opposite side of the lever by compression spring 7. This spring is interengaged between the lever 5 and a backing block 8 secured to the mounting 2.

The time factor of the integrated flow quantity result is introduced into the mechanism by an oscillator, the period of which is influenced by the frequency controller mechanism including the lever 5 and the bellows 4. In the mechanism shown in the drawings the frequency controller lever 5 is connected by a tensioning tie 9 to the oscillator arm or in the form of oscillating lever 10. Such tie may take the form of a tape, the end of which is inserted into a slot in the lever end, in which slot the tape end is clamped by plate 11.

The oscillating lever 10 is shown as being mounted by pivot 12 on the mounting 2 with the lever pivot being disposed horizontal and projecting from a vertical face of the mounting. It is immaterial, however, whether the axis of pivot 12 is horizontal or vertical or inclined, provided that it is disposed perpendicular to the direction of reciprocation of a governor slide 13. Also, the axis of pivot 12 is shown as being parallel to the axis of frequency controller lever pivot 6, but again this is not essential. The drawing simply illustrates a convenient arrangement.

When the lever 10 is set in motion, swinging of its left end as seen in FIG. 1 will place the lever at an angle to tie 9 so that the force exerted by bellows 4 on lever 5 by the tie will exert a restoring moment on the oscillator which tends to return it to its midposition shown in FIG. 1. In normal operation of the integrator the lever 10 will oscillate continually, but the frequency of such oscillation will be altered if and to the extent that the fluid pressure in the bellows 4 varies from time to time. Consequently, it is desirable to provide a governor which cooperates with the oscillator to prevent surges in the oscillator movement. Such governor acts on the oscillator during the central portion of its travel to retard or accelerate it as may be necessary to effect movement of the oscillator at a predetermined speed through the central portion of each stroke.

In the apparatus shown, the governor includes the slide 13 which is guided for reciprocation by spaced guide rods 14 extending through slots 15 in the slide. Reciprocation of the slide at constant speed is effected intermittently by drive mechanism each stroke of which is initiated by movement of the oscillator. The speed of slide reciprocation is independent of the fluid pressure in bellows 4 and of the frequency of the oscillating lever 10. Such mechanism is shown as including the reciprocating plunger 16 carrying piston 17 which is received within an slidable axially of cylinder 18 carried by the mounting 2. Such piston and cylinder constitutes a fluid actuator for reciprocating the governor slide 13 and is operated by fluid under pressure supplied to opposite ends of the cylinder through conduits 19 and 20, respectively.

Oscillation of the oscillating lever 10 and reciprocation of the governor slide 13 are coordinated by the coaction of interfering means carried by the oscillator and the stroke evener. Such interfering means includes a plurality of interengageable ramp surfaces on each of the lever member and the slide member. In the arrangement shown the slide 13 carries an inclined plate 21 which is located to slide through an inclined gate 22 in oscillating lever 10 as shown in FIGS. 2 and 3. As the lever swings to move such gate upward from the position of FIG. 2 through the position of FIG. 4 to the position of FIGS. 5 and 7, the vane lower ramp surface of the plate 21 will be struck by the retarding ramp surface 23 forming one side of the gate 22 to deter swinging of the oscillating lever.

Before the oscillating lever can continue to swing in the direction for elevating gate 22, it is necessary for the slide 13 to be reciprocated to the right as seen in FIGS. 5, 6 and 7 far enough so that the plate 21 will clear the retarding ramp surface 23. Actually the governor slide may be reciprocated far enough so that the upper ramp surface of the plate 21 will strike the interfering driving ramp surface 24 forming the opposite side of gate 22 so as actually to drive the ramp surface 24 upward and thus accelerate swinging of the oscillating lever. The lever will then continue to swing for elevating its right end and depressing its left end until the reaction to the pull on tie 9 is sufficient to reverse the direction of lever swing. The left end of the lever will then rise and the right end of the lever will descend as indicated by the broken arrow in FIG. 8.

By the time the oscillating lever 10 has swung far enough on the next stroke so that its right end approaches the governor

plate 21 as shown in FIG. 8, the slide 13 will have been reciprocated fully to the right so that the plate is in registry with the lower end of another inclined gate 25 as shown in FIGS. 8 and 10. If the slide 13 and the plate 21 do not move, farther downward movement of the right end of the oscillating lever will cause the gate 25 to move over the plate 21 as shown in FIG. 11 until finally the downstroke interferring retarding ramp surface 26 of the lever will engage the upper ramp surface of the plate 21 in the manner shown in FIG. 13. The oscillating lever then cannot continue its swinging movement until after the slide 13 and the plate 21 have been reciprocated to the left as seen in FIGS. 11 and 13 far enough to enable the retarding ramp surface 26 of the lever to clear the plate.

If the slide 13 and plate 21 are reciprocated to the left out of registry with the retarding ramp surface 26 of the oscillating lever 10, the lever can continue to swing in the direction indicated by the broken arrows in FIGS. 11 and 12 so that the right end of the lever will swing into its extreme downward position. If the slide 13 and its plate 21 are reciprocated to the left as seen in FIG. 13 sufficiently quickly, the underside ramp surface of such plate will engage the downstroke interfering inclined lever accelerating ramp surface 27 so as to accelerate the swinging of the lever as it passes the plate 21.

It will be appreciated, therefore, that the swinging of the oscillating lever 10 will be retarded or accelerated, depending upon the interaction between the governor slide plate 21 and the upstroke and downstroke retarding and accelerating ramp surfaces of the lever as the lever gates pass over the plate 21. Alternatively, the accelerating and retarding ramp surfaces could be mounted on the slide and the inclined plate could be mounted on the lever as shown in FIG. 14. In either case, the reciprocation of the governor slide in each direction is initiated by swinging of the reciprocating lever 10 substantially into its midposition.

Reciprocation of the governor slide is effected by the flow of gas, such as air, from a source connection 28 to the conduits 19 and 20 connected to the actuator cylinder 18. Such conduits are connected to a bistable flip-flop fluid supply device 29. Fluid flows through such device from the air source connection 28 to one or the other of conduits 19 and 20, but to only one of such conduits. Gas can flow through the other of such conduits from the cylinder 18 to escape from such cylinder. Selection of the conduit 19 or 20 to which gas is supplied from the source connection 28 is effected by blowing gas into the corresponding control connection 30 or 31. If gas is flowing through the flip-flop device from the air source connection 28 to the conduit 19 as it is in FIG. 3, projection of a pulse of gas into the control connection 30 as in FIG. 6 will switch the flow of gas from the source connection 28 to the conduit 20 as in FIG. 9. Conversely, projection of a pulse of gas into the connection 31 as in FIG. 12 will switch the flow of gas through the flip-flop device from conduit 20 to conduit 19.

As mentioned above, reciprocation of the governor slide in each direction must be initiated by swinging of the reciprocating lever 10 substantially into its midposition. Consequently, the oscillating lever 10 is provided with valving mechanism to effect projection of a switching fluid pulse into one or the other of control fluid connections 30 and 31 as the lever swings through its midposition. Such valving means controls flow of fluid from the control gas jets 32 and 33 to the appropriate one of the control fluid connections 30 and 31. Control gas is supplied to the jets 32 and 33 from the common gas source conduit 34.

The control valve mechanism includes jet-blocking valve leaves 35 and 36 extending respectively oppositely from the oscillating lever 10 as shown in FIGS. 1, 2, 5, 8 and 11. These leaves are separated by a deep notch 37 aligned with the oscillating lever 10. In addition, the valving mechanism includes a gas control jet-blocking leaf 38 carried by the governor slide 13, which is shown particularly in FIGS. 2, 5, 8 and 11. The jet-blocking action of these leaves is also illustrated in FIGS. 3, 6, 9 and 12.

It will be seen from FIGS. 5 and 11 that the deep notch 37 of the oscillating lever 10 uncovers both control jets 32 and 33 when the oscillating lever 10 is in its midposition. The stroke evener slide leaf 38, on the other hand, will always block at least one control jet. In FIGS. 2, 3, 5 and 6 such leaf blocks the left control jet 33 and in the position of FIGS. 8, 9, 11 and 12 such leaf blocks the right control jet 32. It will be seen that the ends of control fluid connections 30 and 31 adjacent to the valving mechanism are aligned respectively with the jets 32 and 33 so that if such jets are not blocked they would project a stream of gas into the connections 30 and 31.

When the slide 13 is fully to the left as seen in FIGS. 2, 3, 5 and 6, the slide leaf 38 does not block the right jet 32, so that when the oscillating lever 10 moves into its central position of FIG. 5 to bring the deep notch 37 into registry with the jet 32, such jet will project a stream of gas through the notch and past the leaf 38 into the control fluid connection 30 of the flip-flop device 29. Such projection will switch the flow of gas to the cylinder 18 from conduit 19 to conduit 20 to drive the piston 17 and connecting rod 16 and slide 13 from the position of FIGS. 3 and 6 to the right into the position of FIGS. 8 and 11.

With the slide 13 in the position of FIGS. 8, 9, 11 and 12, the leaf 38 will block the jet 32 but not the jet 33. As the oscillating lever 10 moves into its central position of FIGS. 11 and 12, therefore, the control fluid jet 33 will be projected through the deep notch 37 and past the leaf 38 into the control fluid connection 31 for switching the flow of fluid through the flip-flop device 29 from the supply conduit 28 to the connection conduit 19 instead of the connecting conduit 20. Gas supplied through the conduit 19 to the cylinder 18 will then drive the piston 17, connecting rod 16 and slide 13 to the left from the position of FIGS. 8, 9, 11 and 12 to the position of FIGS. 2, 3, 5 and 6.

It will be seen, therefore, that during each oscillating stroke of lever 10 slide 13 also will perform one stroke. As the right end of the oscillating lever 10 swings upward from the position of FIG. 2 through the position of FIG. 5 to the position of FIG. 8, the slide 13 will perform a stroke from the position of FIGS. 2 and 5 to the right into the position of FIGS 8 and 11. Conversely, as the oscillating lever performs a stroke during which its right end swings downward from the position of FIG. 8 through the position of FIG. 11 to the position of FIG. 2, the slide 13 will perform a stroke from the right position of FIGS. 8 and 11 to the left position of FIGS. 2 and 5.

In order to record each cycle of lever oscillation and slide reciprocation, indicating mechanism can be actuated by one or the other of these elements to execute an indicating indexing movement. Representative indicating mechanism is shown in FIG. 1 as including the pawl arm 39 cooperating with the ratchet wheel 40 mounted on the axle 41. Counter mechanism 42 is connected to the ratchet wheel 40 to be turned as the ratchet wheel moves step by step to accumulate a numerical indication corresponding to the swinging of the oscillating lever and reciprocation of the slide 13.

It will be observed particularly from a comparison of FIGS. 2 and 5, for example, that as the frequency controller lever 5 is swung by the tie 9 in synchronism with the oscillating lever 10, the length of spring 7 opposing the force produced by bellows 4 will change. As the length of the spring increases to the condition of FIG. 2, it will exert less opposing force on the lever 5 than when the spring is in the more contracted condition of FIG. 5. It is desirable to regulate the force applied to lever 5 in opposition to the force produced by bellows 4 so that such opposing force will be the same in all swung positions of the lever 5.

Exertion on lever 5 of a force opposing the force of bellows 4 produced by pressure in such bellows in excess of a small reference force, such as 3 pounds per square inch, which opposing force is always constant for all positions of lever 5, is accomplished by compensating the thrust of compression spring 7 and the resilient force of bellows 4 by the attraction of a magnet 43. The tip 44 of the lever 5 is formed of magnetic material and serves as an armature cooperating with such

magnet. As the armature 44 approaches the magnet, the attractive force of the magnet increases, and as the armature recedes from the magnet as the speed controller lever swings the attractive force of the magnet decreases. By selecting a magnet of proper strength and locating it in proper relationship to the armature 44, both radially of the lever pivot and transversely of the lever, the sum of the moments produced on the lever by the magnetic attraction force, by the force of compression spring 7, and by the resilient force of bellows 4 can result in nearly zero resulting moment being exerted on the lever by these components in all swung positions of such lever throughout its possible range of swing.

A stop to limit swinging of lever 5 toward oscillating lever 10 can be provided in the form of the stop rod 45 shown best in FIG. 1. Also, yieldable stop rods 46 can be located at opposite sides of the oscillating lever 10 for limiting gently the amplitude of movement of the oscillator in either direction. Under normal operating conditions the lever will not contact these stops.

As stated above, the interfering means of the governor can be reversed from the arrangement and construction shown in FIGS. 1 to 13 and such a reverse arrangement and construction is shown in FIG. 14. In this instance an inclined plate 21*a* is mounted on the oscillating lever 10*a* and inclined gates forming retarding and accelerating ramp surfaces cooperating with ramp surfaces of such plate are mounted on the reciprocating governor slide 13*a*. This slide is in a position fully to the right as the oscillating lever 10*a* swings in a direction to raise the plate 21*a*.

If the slide 13*a* has not moved toward the left as the plate 21*a* moves through the gate 22*a*, such plate will strike the retarding ramp surface 23*a*. As slide 13*a* then moves toward the left, the accelerating ramp surface 24*a* may strike the underside of the plate 21*a* to accelerate swinging of the lever 10*a* if the lever is not swinging fast enough to move plate 21*a* through gate 22*a* out of the path of the accelerating ramp surface 24*a*.

When the right end of oscillating lever 10*a* starts to descend, the governor slide 13*a* will have been moved fully to the left, as seen in FIG. 14, by the piston 17*a*. If the oscillator moves plate 21*a* too fast through the gate 25*a*, such plate will strike retarding ramp surface 26*a* to retard swinging of the oscillating lever. If such lever then is swinging too slowly as it moves through its midposition, the accelerating ramp surface 27*a* will strike the upper ramp surface of the plate 21*a* to accelerate the lever 10*a*. If the oscillating lever is swinging at precisely the correct speed for synchronization with reciprocation of the slide 13*a*, plate 21*a* may pass up through gate 22*a* and down through gate 25*a* without contact between such plate and any of the ramp surfaces 23*a*, 24*a*, 26*a* and 27*a*.

As the governor slide 13*a* reciprocates, it will also reciprocate the indicator pawl 39*a* which engages the indicator ratchet 40 mounted on shaft 41 of the indicator 42 as describe in connection with the apparatus shown in FIG. 1.

Whether the interferring mechanism carried by the oscillating integrator lever and the governor slide is of the type shown in FIG. 1 to 13 or of the type shown in FIG. 14, the action of the stroke evener mechanism will insure that the oscillating lever continues to oscillate as long as fluid is flowing through the conduit to impose on bellows 4 a force above a reference force. Customarily, such bellows exerts a reference force on the frequency controller lever 5 corresponding to a fluid pressure within the bellows of 3 pounds per square inch. Such pressure correspond to zero flow of fluid through the conduit. As the flow through the conduit increases, the pressure in the bellows will be increased correspondingly.

Whenever the oscillating lever 10 or 10*a* reaches the neutral position, the flip-flop 29 will be activated to reciprocate the stroke evener slide for driving the oscillating lever out of such neutral position. Consequently, the oscillating lever can never come to rest in such neutral position if there is no flow through the conduit to produce a pressure in bellows 4 greater than the reference pressure. However, the forces on the speed controller lever 5 exerted by the bellows, by the spring 7 and the magnet 48 will result in the torque on such lever being balanced so that no restoring stress is transmitted from such lever through tie 9 to the oscillating integrating lever 10. Such lever will therefore remain stationary in a position displaced from its neutral position until a torque is exerted on lever 5 by force resulting from an increase in pressure in bellows 4 sufficient to exert a restoring force tension in tie 9 for swinging lever 10 toward its central position.

As soon as swinging of oscillating lever 10 or 10*a* is resumed by application to it of such restoring force, it will be swung from a position of rest toward its midposition. In such midposition one or the other of the control fluid jets 32 and 33 will be uncovered by being in registry with the slot 37 of the lever 10 or 10*a* and out of registry with vane 38 of the governor slide so as to effect a reciprocation stroke of slide 13 or 13*a*. The inner action of the elements of interfering mechanism will regulate the speed of the lever as it passes through its midposition in the manner explained and the intensity of the restoring force exerted on the lever through the tie 9 will determine the frequency at which the lever 10*a* oscillates. Such frequency in turn will govern the frequency of reciprocation of the slide 13 or 13*a* and of the actuation of counter 42 by pawl 39 and ratchet wheel 40. Consequently, the resultant rotation of the counter 42 will reflect accurately the flow of fluid through the conduit to which flow the pressure in bellows 4 above the reference pressure is responsive.

I claim:

1. In a fluid pressure time integrator for indicating the flow of fluid through a conduit including oscillating means, a frequency controller exerting a force on the oscillating means for controlling the frequency of oscillation thereof, force-applying means operable to exert a force on the frequency controller and means responsive to pressure in the conduit corresponding to the velocity of flow therethrough for varying the force exerted on the force-applying means corresponding to such pressure, the improvement which comprises the oscillating means including an oscillating arm swingable about an axis alternately to opposite sides of a central position, the frequency controller including means for urging said oscillating arm to swing toward such central position, readout means operated in synchronism with swinging of said arm, and governor means engageable with said oscillating arm during swinging thereof through the central portion of its oscillation for effecting substantially even swinging of said arm to opposite sides of such central position.

2. The integrator defined in claim 1, in which the frequency controller includes a frequency controller lever having its length extending transversely of the oscillating arm, and tie means having its length extending generally parallel to the length of the oscillating arm and connecting the oscillating arm and said frequency controller lever for application of restoring stress to the oscillating arm exerted generally lengthwise thereof by said frequency controller lever exerting tension on said tie means.

3. The integrator defined in claim 1, in which the governor means includes means for retarding or accelerating movement of the oscillating arm through its central position for effecting predetermined velocity of the oscillating arm in such central position irrespective of the frequency of the oscillating arm oscillations.

4. The integrator defined in claim 1, in which the governor means includes slide located alongside the oscillating arm and reciprocable along a path perpendicular to the axis of swing of the oscillating arm and said slide being engageable with the oscillating arm, and drive means for effecting reciprocation of said slide controlled by swinging of the oscillating arm.

5. The integrator defined in claim 4, in which the governor means further includes interfering means having a portion carried by the oscillating arm and a portion carried by the slide, which interfering means portions coact to synchronize swinging of the oscillating arm with reciprocation of the slide.

6. The integrator defined in claim 5, in which the two portions of the interfering means include ramp surfaces on the oscillating arm and on the slide wedgingly interengageable to exert an accelerating force on the oscillating arm if its swinging tends to lag behind the reciprocation of the slide and to exert a retarding force on the oscillating arm if its swinging tends to forge ahead of the reciprocation of the slide.

7. The integrator defined in claim 4, the drive means for effecting reciprocation of the slide being fluid-actuated, and fluid-supply control means for the drive means for altering the supply of fluid to the drive means when the oscillating arm is in a predetermined position and the slide is in a predetermined position.

8. The integrator defined in claim 7, in which the fluid supply control means includes fluid-valving means operatively connected conjointly to the oscillating arm and to the slide.

9. The integrator defined in claim 8, in which the fluid supply control means includes fluid jet means, and the fluid-valving means includes cooperating valve leaves carried by the oscillating arm and by the slide movable into positions to block flow of fluid from said fluid jet means.

* * * * *