W. S. MAYER.

INSULATOR SUPPORT.

APPLICATION FILED APR. 21, 1917.

1,271,596. Patented July 9, 1918.

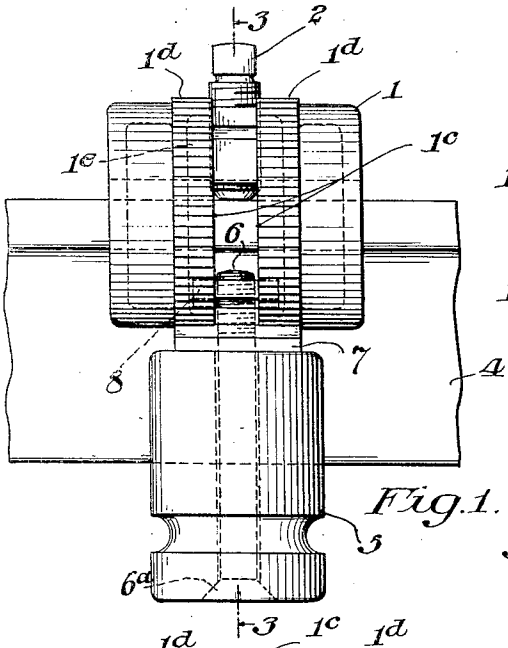

Fig. 1.

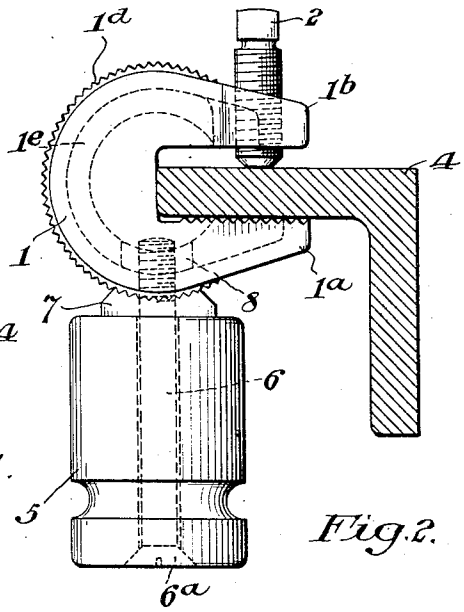

Fig. 2.

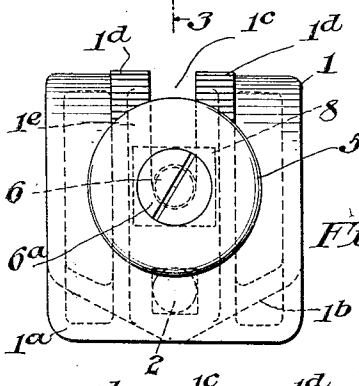

Fig. 4.

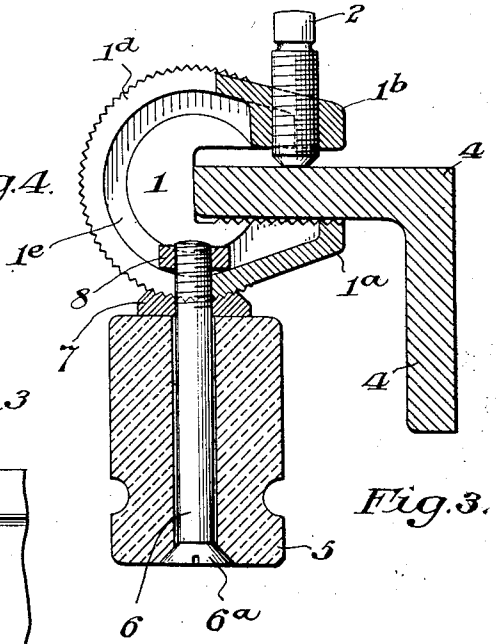

Fig. 3.

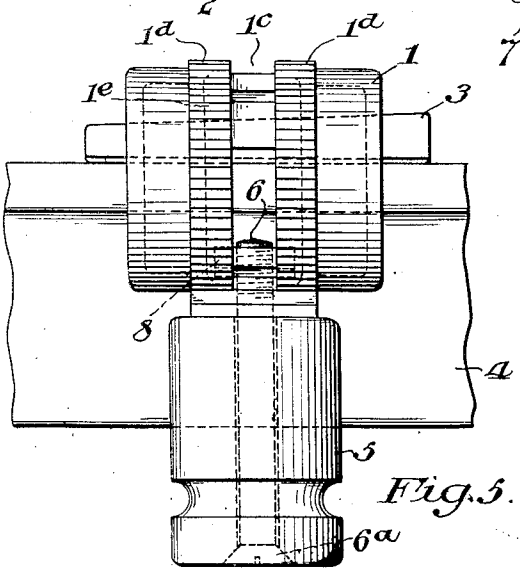

Fig. 5.

Inventor:
Walter S. Mayer,
By Charles N. Butler
Attorney.

UNITED STATES PATENT OFFICE.

WALTER S. MAYER, OF PHILADELPHIA, PENNSYLVANIA, ASSIGNOR TO ELECTRIC SERVICE SUPPLIES COMPANY, OF PHILADELPHIA, PENNSYLVANIA, A CORPORATION OF PENNSYLVANIA.

INSULATOR-SUPPORT.

1,271,596. Specification of Letters Patent. Patented July 9, 1918.

Application filed April 21, 1917. Serial No. 163,557.

To all whom it may concern:

Be it known that I, WALTER S. MAYER, a citizen of the United States, residing in the city of Philadelphia, county of Philadelphia, and State of Pennsylvania, have invented certain Improvements in Insulator-Supports, of which the following is a specification.

My invention is a simple, inexpensive and readily adjustable device for holding an insulator securely in any desired position, and it is characterized by its means for clamping it firmly to carrying means, such as a metal shape, and clamping the insulator firmly in various angular positions, permitting a universal adjustment of the insulator.

The characteristic features of the invention are fully disclosed in the following description and the accompanying drawings in illustration thereof.

In the drawings, Figure 1 is a front elevation of a form of my improved device fixed to a leg of an angle iron; Fig. 2 is a side elevation of the same device with the angle iron shown in section; Fig. 3 is a sectional view taken on the line 3—3 of Fig. 1; Fig. 4 is a plan view of the detached device; and Fig. 5 is a front elevation of a modified construction.

As illustrated in the drawings, my improved device comprises a hollow body or barrel 1 having the jaws 1^a and 1^b extending laterally therefrom and containing the slot 1^c between the curved bearings 1^d disposed oppositely to the jaws; the jaw 1^a being serrated on its inner surface, the jaw 1^b containing the set screw 2 or the wedge 3, and the bearings 1^d being externally serrated.

This device is adapted to be fixed to the shape 4 by placing the jaws 1^a and 1^b on opposite sides of a leg thereof and drawing up the screw 2 or the wedge 3 firmly against the leg.

The insulator 5 is connected to the body 1 by a bolt 6 which passes through the axis of the insulator, a shoe 7, the slot 1^c and a nut 8, the shoe, against which the insulator bears, having a serrated curved bearing adapted for engaging the serrations of the bearings 1^d and the nut being movable in and prevented from turning by the angular ways 1^e within the barrel on opposite sides of the slot 1^c.

The bolt 6 has a screw head 6^a, countersunk in the insulator, and is adapted to be turned by a screw driver to free the engagements of the parts 7 and 8 with the exterior and interior surfaces of the bearings 1^d, when the parts 5, 6, 7, and 8 can be adjusted together to the various relatively angular positions between the limits of the slot 1^c and set securely in the desired position by screwing in the bolt.

Having described my invention, I claim:

An insulator and a support therefor comprising a body provided with jaws for fixing it to carrying means, bearings separated by a slot and guide ways within said bearings, in combination with a nut movable within and controlled by said ways, a shoe supporting said insulator and engaging said bearings, and a bolt passing through said insulator, shoe and slot into engagement with said nut.

In testimony whereof I have hereunto set my name this 13 day of April, 1917.

WALTER S. MAYER.