2 Sheets—Sheet 1.

T. HALL & T. J. WHITNEY.

Oil-Stove.

No. 200,056. **Patented Feb. 5, 1878.**

FIG. 1

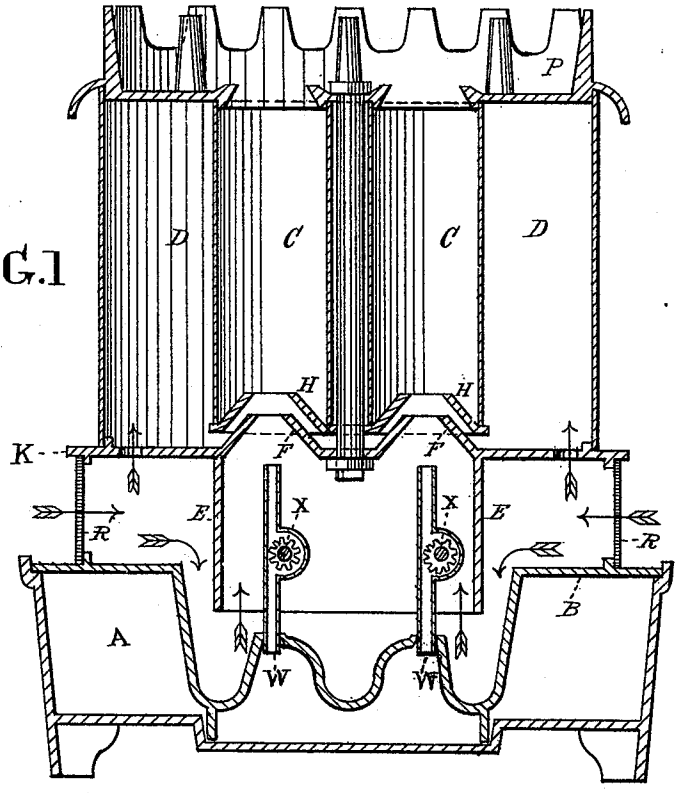

Attest

W. E. Maguire

Henry Hall

Inventors

Thos. Hall

Thos. J. Whitney

N. PETERS, PHOTO-LITHOGRAPHER, WASHINGTON, D. C.

T. HALL & T. J. WHITNEY.

Oil-Stove.

2 Sheets—Sheet 2.

No. 200,056. Patented Feb. 5, 1878.

FIG. 2

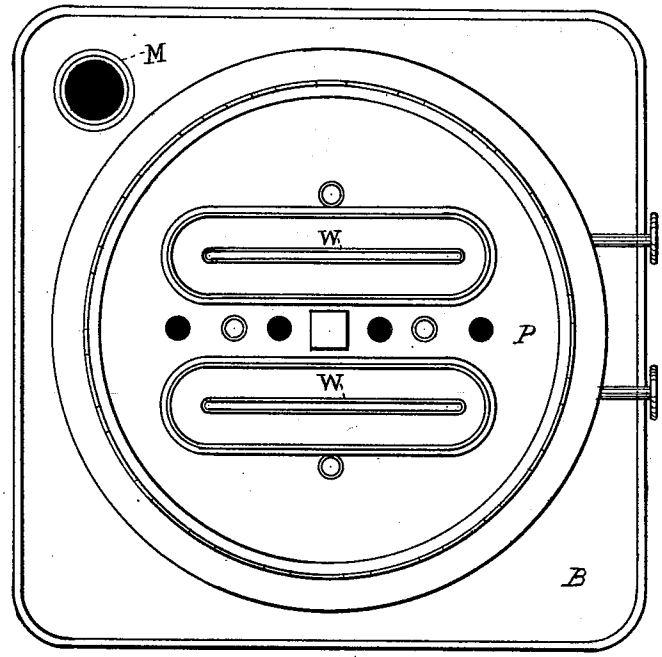

FIG. 3

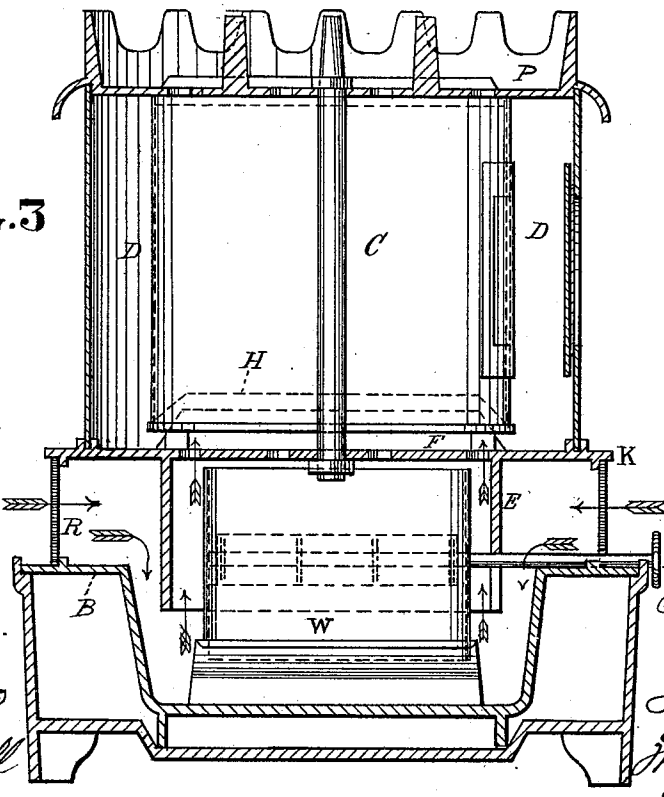

Attest

W E Maguire

Henry Hall

Inventors.

Thos. Hall

Thos. J. Whitney

N. PETERS, PHOTO-LITHOGRAPHER, WASHINGTON, D. C.

UNITED STATES PATENT OFFICE.

THOMAS HALL, OF BROOKLYN, NEW YORK, AND THOMAS J. WHITNEY, OF PHILADELPHIA, PENNSYLVANIA.

IMPROVEMENT IN OIL-STOVES.

Specification forming part of Letters Patent No. **200,056**, dated February 5, 1878; application filed April 7, 1877.

To all whom it may concern:

Be it known that we, THOMAS HALL, of the city of Brooklyn, county of Kings, and State of New York, and THOMAS J. WHITNEY, of the city of Philadelphia, State of Pennsylvania, have invented a new and useful Device for Burning Petroleum or other oils for cooking and heating, whereby a safe, convenient, and efficient use of fuel is attained.

Our invention consists in a new mode of construction and form of reservoir; also, a partition or curtain surrounding the wick-tubes; also, a device for supplying a supplementary portion of air to the flame by passing between heated surfaces.

In the drawing accompanying this specification, Figure 1 shows a front sectional elevation. Fig. 2 shows a plan. Fig. 3 shows a side sectional elevation.

Like figures refer to like parts.

A is the reservoir for containing oil. B is the cover of reservoir, formed with a depression in the top, a portion of which extends nearly to the bottom of the reservoir. From the bottom of the depression rises the wick-chamber and wick-tubes W W.

The reservoir A and cover B are made in two pieces, of cast iron, as shown, so that B fits into A, and can be secured by solder or other suitable means.

M is an opening in top or cover of reservoir, for filling with oil.

The upper portions of wick-tubes are made of sheet metal, with wheels X X to raise or lower the wicks. The tops of wick-tubes extend up to the cones F F in plate K, which is supported on the reservoir by ring R.

Above the cones F F are placed supplementary cones H H, with a small space between them. Fitted to cones H H, and supporting them, are chimneys C C, which extend to the top plate P.

D is a cylinder or drum, extending from plate K to top plate P, and inclosing chimneys C C.

From the bottom of plate K hangs a curtain, E, extending around the wick-tubes, inside of and nearly to the bottom of the depression in reservoir.

When the reservoir is filled with oil, the oil rises in the wick-tubes nearly up to the wheels that raise the wicks, leaving but a short distance for the oil to be drawn by capillary attraction to the flame, thereby supplying the flame freely, and avoiding excessive charring of the wick. At the same time the length *c* of the wick-tubes prevent heat being communicated to the reservoir in any great degree.

The oil from the reservoir can only pass to the wick-chamber through the narrow space between the bottom of depression and the bottom of the reservoir. Vapors or gases forming in the wick-chamber cannot pass into the body of the reservoir, nor air in the reservoir pass into the wick-chamber unless entirely empty of oil.

The curtain E concentrates the heat from the flames, and stops radiation or communication of heat to the reservoir. The heat attained within the curtain induces a current of air upward through the cones, making a hot blast on the flames.

The supply of air goes through the perforations in ring R, over the top of the reservoir, down between the reservoir and the curtain E, under the curtain, as shown by arrows in drawing. The air passing through the perforations in ring R takes the heat from it, and gradually becomes hotter as it approaches the flame. A portion of air, after passing through the perforated ring, passes up through holes in plate K into drum D, as shown in drawing, where it becomes heated, and is drawn into the chimneys through the narrow space between the cones F and H, thereby becoming still more highly heated, and impinges on the flame, so as to make thorough combustion a certainty, and free from smoke or odor of unconsumed oil.

What we claim, and desire to secure by Letters Patent, is—

1. The reservoir A, with depressed recess in bottom, and with a flange around the

edge to receive the cover B, in combination with the cover B, with depression in top, and a hanging partition extending into the recess in the bottom of A, substantially as described.

2. The reservoir A, wick-tubes W W, perforated ring R, plate K, and curtain E, substantially as shown.

3. The hanging partition or curtain E, plate K, and cones F and H, substantially as shown and described.

THOS. HALL.
THOS. J. WHITNEY.

Witnesses:
W. E. MAGUIRE,
HENRY HALL.