J. F. RAKES.

FAN-ATTACHMENTS FOR ROCKING-CHAIRS.

No. 194,174. Patented Aug. 14, 1877.

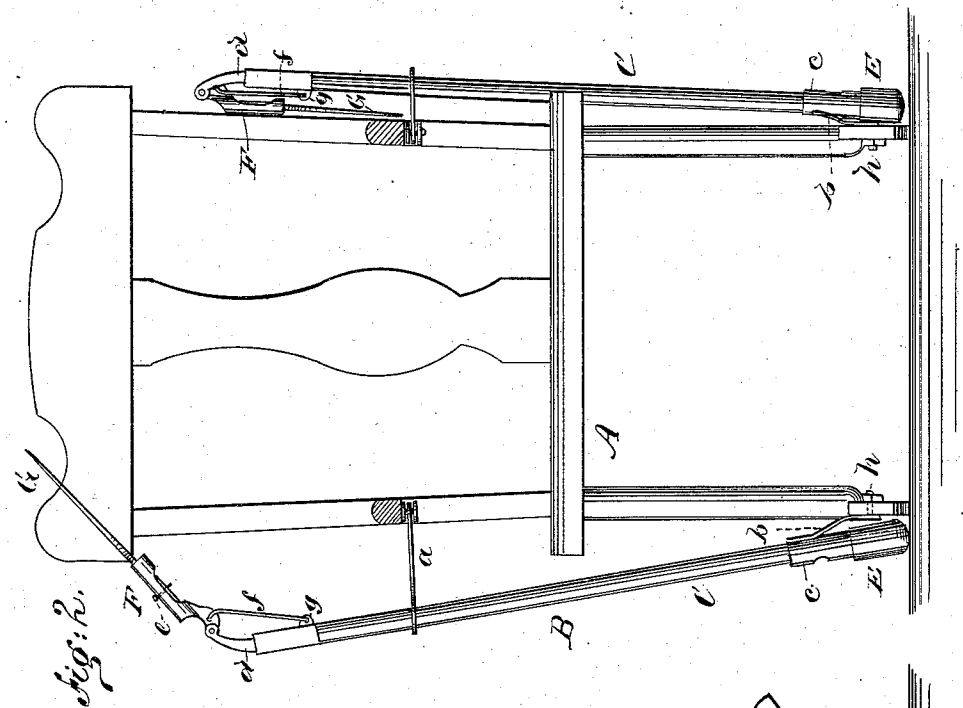

Fig: 2.

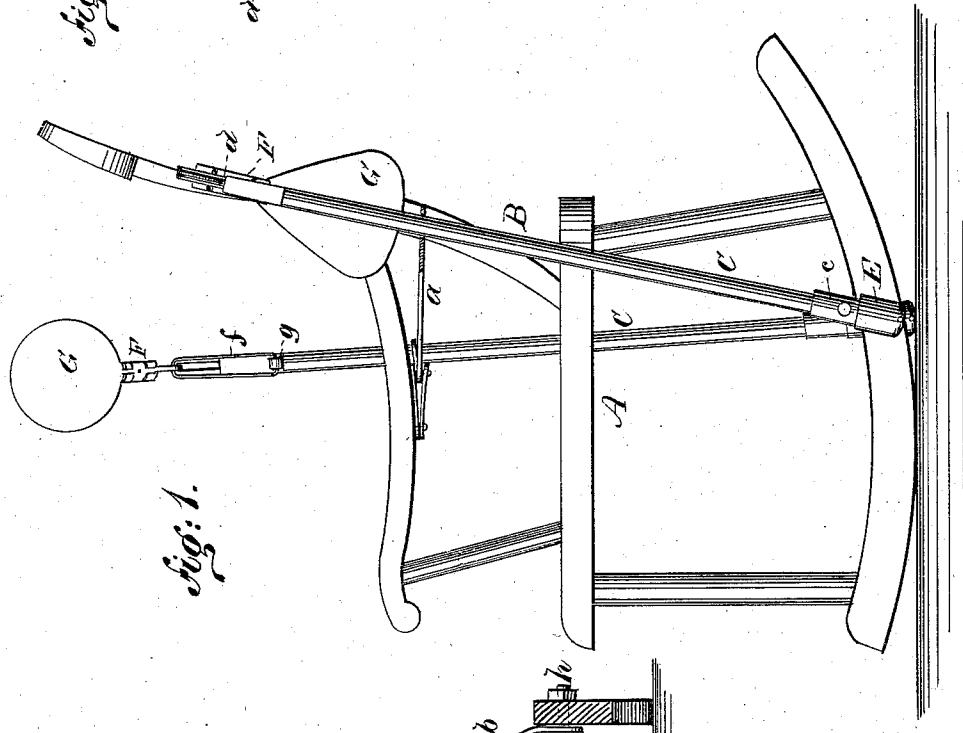

Fig: 1.

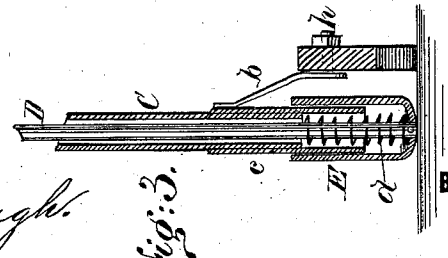

Fig: 3.

WITNESSES:

Chas. Nida

J. H. Scarborough.

INVENTOR:

J. F. Rakes.

BY

ATTORNEYS.

N. PETERS, PHOTO-LITHOGRAPHER, WASHINGTON, D. C.

UNITED STATES PATENT OFFICE.

JOHN F. RAKES, OF GREENUP, KENTUCKY, ASSIGNOR TO HIMSELF AND WILLIAM BRYSON, OF SAME PLACE.

IMPROVEMENT IN FAN ATTACHMENTS FOR ROCKING-CHAIRS.

Specification forming part of Letters Patent No. **194,174**, dated August 14, 1877; application filed May 12, 1877.

To all whom it may concern:

Be it known that I, JOHN F. RAKES, of Greenup, in the county of Greenup and State of Kentucky, have invented a new and Improved Fan Attachment for Rocking-Chairs, of which the following is a specification:

Figure 1 is a side elevation of a rocking-chair having my improvement attached. Fig. 2 is a front elevation. Fig. 3 is a detail view of a portion of the mechanism for operating the fans.

Similar letters of reference indicate corresponding parts.

The object of the invention is to provide a fanning device for attachment to rocking-chairs or cradles, to be operated by the motion of the same.

In the drawings, A is an ordinary rocking-chair, and B the fanning device, which is secured to the chair by the arms *a b*. C is a tube, to the lower end of which is secured a short section, *c*, of tube, which projects a short distance beyond the end of the tube C, forming a barrel for receiving the spiral spring *d*. D is a rod that runs through the tube C, and is secured at its lower end to a cap, E, that shuts over the tube *c*, and incloses the lower portion of the spring *d*. The upper end of the tube C is squared to receive the squared end of the rod D.

The upper end of the rod D is curved, and to it is hinged a socket, F, for receiving the fan G, which is retained in place by the pin *e*. A link, *f*, is connected with the socket F, and an ear, *g*, that projects from the squared part of the tube C. The lower end of the tube C is secured to the chair by the spring-arm *b*, which is attached to the short tube *c*, and is fastened to the center of the chair-rocker by a bolt, *h*. The upper end of the tube C is supported by the arm *a*, which is pivoted to the under side of the arm of the chair, and embraces the said tube loosely, so that it may slide and turn in the arm as it swings on its pivot. One of the attachments may be used, or two may be employed, as may be desired.

When the attachment is not in use the fan is folded down parallel with the tube C, and the arm *b* is turned on its pivot, bringing the said tube parallel with the back of the chair. By swinging the arm out at right angles to the arm of the chair, the apparatus is brought into position for operation. When the rocker of the chair is moved so as to raise its center from the floor, the spring *d* throws the rod D downward, drawing the short arm of the socket F downward, and throwing up the fan. When the center of the rocker touches the floor the fan is thrown down by the movement of the rod C.

It will be seen that the chair, in rocking in either direction, produces a full stroke of the fan in both directions.

Having thus described my invention, I claim as new and desire to secure by Letters Patent—

The tube C, rod D, having the cap E, the link *f*, socket F, and fan G, in combination, substantially as herein shown and described.

JOHN F. RAKES.

Witnesses:
JOHN H. BRIGGS,
JOHN L. BAYSON.