No. 705,751.

Patented July 29, 1902.

D. GROVE.

APPARATUS FOR STERILIZING WATER, &c.

(Application filed Sept. 8, 1900.)

(No Model.)

FIG. 1.

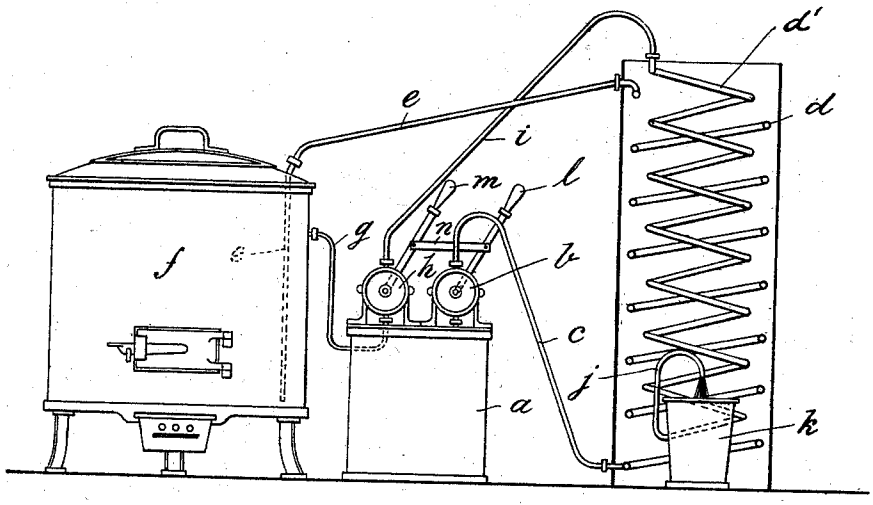

FIG. 2.

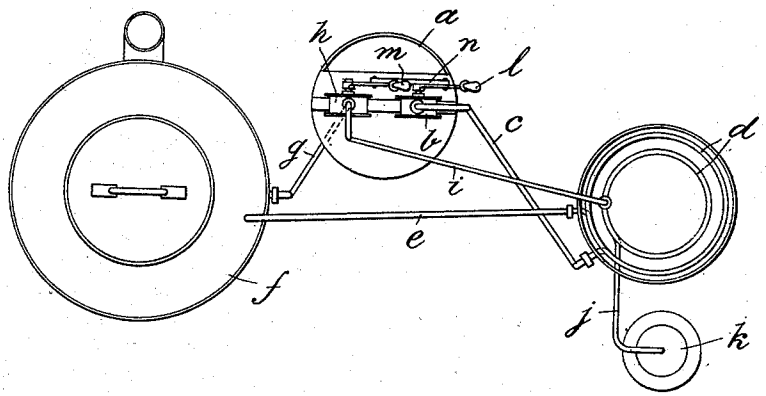

WITNESSES:
Ella L. Geler
Otto Munk

INVENTOR
David Grove
BY
Richards R.
ATTORNEYS

THE NORRIS PETERS CO., PHOTO-LITHO., WASHINGTON, D. C.

UNITED STATES PATENT OFFICE.

DAVID GROVE, OF BERLIN, GERMANY.

APPARATUS FOR STERILIZING WATER, &c.

SPECIFICATION forming part of Letters Patent No. 705,751, dated July 29, 1902.

Application filed September 8, 1900. Serial No. 29,402. (No model.)

To all whom it may concern:

Be it known that I, DAVID GROVE, manufacturer, a subject of the Emperor of Germany, and a resident of No. 24 Friedrichstrasse, Berlin, in the Empire of Germany, have invented a certain new and useful Improved Apparatus for Sterilizing Water for Drinking Purposes, of which the following is an exact, full, and clear description.

This invention relates to an apparatus for sterilizing raw water drawn from a well or storage-reservoir by heating.

The apparatus consists, essentially, of two suitable pumps the actuating cranks or levers of which are preferably connected together. One of these pumps forces the raw water through a coil of a range of double coils, while the other pump forces the heated sterilized water passing from the heating vessel through an overflow-pipe through the other coil in an opposite direction to the flow of the raw water. In this manner the raw water is thoroughly heated before it passes into the heating vessel, so that only a further slight heating of the same in the vessel is necessary, while the sterilized water is cooled by the delivery of its heat to the raw-water coil to such an extent that it may be drunk immediately. The heating vessel is an ordinary open boiler preferably provided with a loosely-mounted lid. By this arrangement the heating vessel is made independent of the resisting pressure arising in the coils, and the complicated apparatus necessary in connection with a closed boiler and the dangers accompanying the same are thereby obviated.

The improved apparatus can be operated without special practical knowledge and attention and sterilized drinkable water can be attained in a comparatively very short space of time. For this reason it is specially adapted for the delivery of drinking-water in large quantities—as, for instance, for the army, in large factories, and the like.

The accompanying drawings show such an apparatus for sterilizing water.

Figure 1 is a view, partly shown in section; and Fig. 2 is a plan of the apparatus according to Fig. 1.

The sterilizing apparatus consists of the storage-reservoir *a* for the raw water, which, if necessary, can also be drawn directly from a well or the like. The raw water is drawn from the reservoir *a* through a suitable pump *b* and forced through a pipe *c* into a primary coil of a system or range *d* of double coils in order to be then fed to the open heating vessel *f* through a pipe *e*, preferably extending to the bottom of the heating vessel. The heated and sterilized water passes out through an overflow-pipe *g* at the upper part of the vessel *f*, and thus reaches a second pump *h*, whose pressure-pipe *i* feeds the sterilized water into the secondary coil of the range *d'*, through which coil hot water flows in an opposite direction to the flow of the raw water in the first coil. In this manner the greater part of the heat of the hot water is delivered to the cold raw water, so that the latter passes in a throughly-heated state into the vessel *f*, and only a further slight heating and a short space of time are required for obtaining the sterilizing temperature. The sterilized, considerably-cooled, and therefore drinkable water passes through a pipe *j* into a collecting vessel *k*.

The pumps *b* and *h* are preferably coupled by the connection of their operating-levers *l m* by means of a rod *n* in order that the feed of the raw and drinking water is always uniform and a uniform delivery of heat is obtained.

The pump attendant can always observe simmering of the water in the vessel *f*, and by a corresponding regulation of the heating of the boiler he can retard or accelerate the feed of the sterilized hot water.

Since the temperature of the raw water in the vessel *f* will on an average only have to be increased by about 10° Celsius, the heating-surface of the boiler need only be comparatively small. The boiling period of the water is also limited to a few minutes, which according to experience are, however, quite sufficient for rendering any micro-organisms uninjurious.

Having now particularly described and ascertained the nature of the said invention, I declare that what I claim, and wish to secure by Letters Patent, is—

In an improved apparatus for sterilizing water for drinking purposes, the combination with a tank for the water and an open heater containing primary and secondary coils, of

an initial supply-pump connected to said primary coil, pipe connections from said primary coil to the heater, a second pump connected to the heater and a connection from said second pump to the secondary coil, said secondary coil having an outlet for the sterilized water.

In witness whereof I have hereunto set my hand in presence of two witnesses.

DAVID GROVE.

Witnesses:
WOLDEMAR HAUPT,
HENRY HASPER.