Sept. 26, 1972 E. C. MARSHALL 3,694,287

PRESSURE SENSITIVE LABEL STRIP CONSTRUCTION
AND METHOD OF MAKING SAME
Original Filed July 11, 1969

FIG. 1

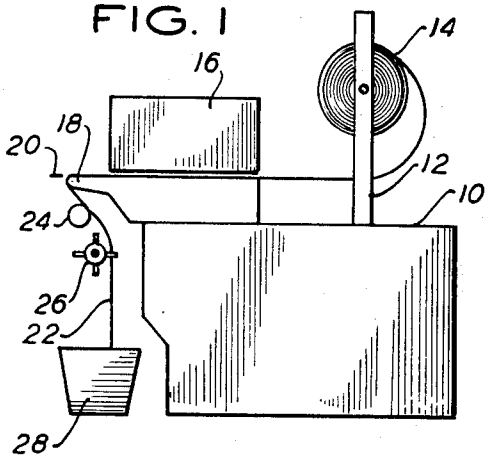

FIG. 3

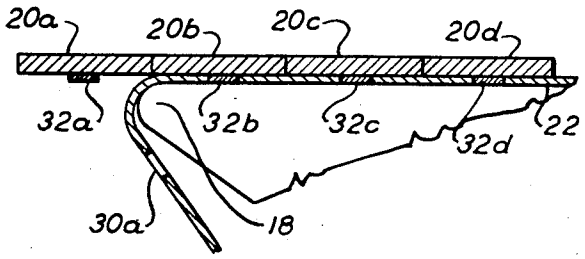

FIG. 2

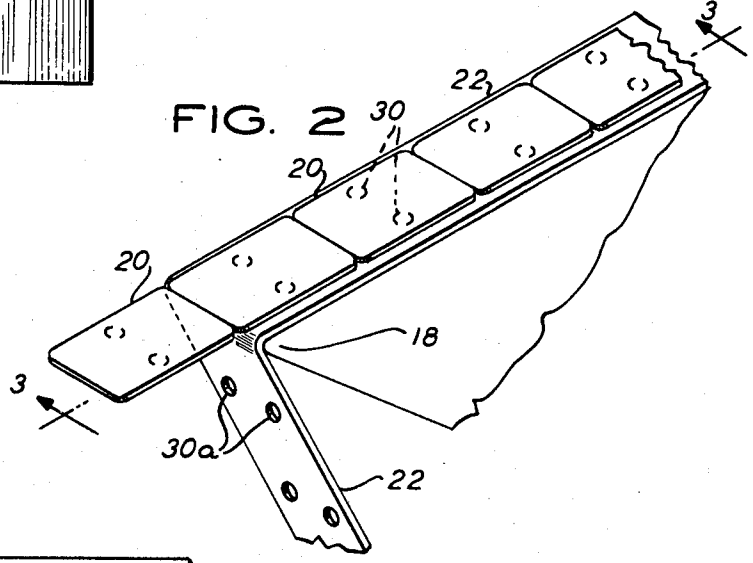

FIG. 4

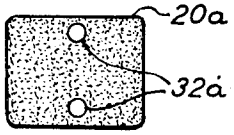

FIG. 5

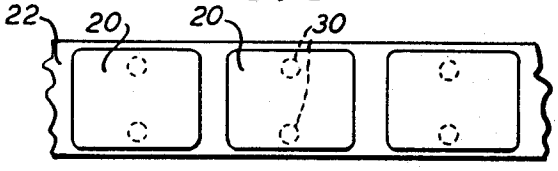

FIG. 7

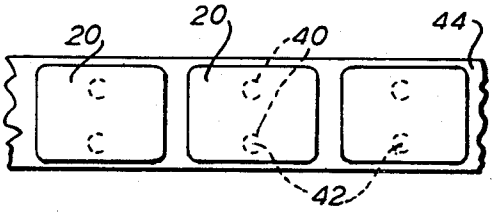

FIG. 6

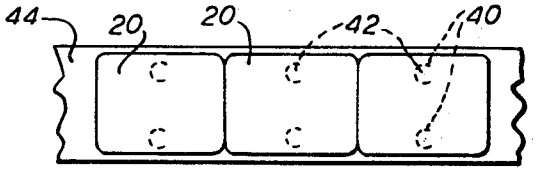

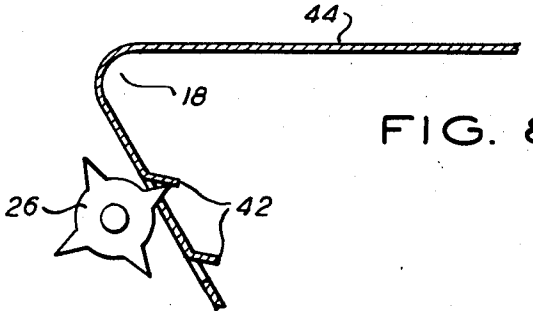

FIG. 8

INVENTOR
EDWARD C. MARSHALL

United States Patent Office 3,694,287 Patented Sept. 26, 1972

3,694,287

PRESSURE SENSITIVE LABEL STRIP CONSTRUCTION AND METHOD OF MAKING SAME

Edward C. Marshall, 17 Marion Road, Upper Montclair, N.J. 07043

Application July 11, 1969, Ser. No. 841,100, now Patent No. 3,501,365, which is a continuation-in-part of application Ser. No. 562,771, July 5, 1966. Divided and this application Jan. 12 1970, Ser. No. 7,435

Int. Cl. B32b *31/18, 3/16*

U.S. Cl. 156—257 6 Claims

ABSTRACT OF THE DISCLOSURE

A plurality of labels with pressure sensitive adhesive thereon are disposed along a supporting material of release paper in either spaced or juxtaposed relationship and with feed holes formed in the release paper so that all the feed holes lie within the peripheral limits of associated labels and so that some release paper also lies within the peripheral limits of the feed holes; said periphery of said feed holes either being formed in a complete geometric shape or an incomplete geometric shape. When the label and supporting material is thereafter fed by a pin feed drum about a stripping edge, in those situations where the feed holes are defined by a complete geometric periphery the portion of the supporting material therewithin travels with the label as it is stripped from support material; while in those situations where the feed holes are defined by an incomplete geometric shape the support material therewithin remains with the web of supporting material and is moved out of the plane thereof when said supporting material coacts with the pin feed drum in a chadless type operation.

CROSS-REFERENCE TO RELATED APPLICATIONS

This application is a division of my co-pending application Ser. No. 841,100, filed July 11, 1969, now Pat. No. 3,501,365; which in turn was a continuation-in-part of application Ser. No. 562,771, filed July 5, 1966, now abandoned.

BACKGROUND OF THE INVENTION—FIELD OF APPLICATION

This invention pertains to pressure sensitive label strip construction and the method for making same and more particularly to a novel way of constructing pressure sensitive label strips employing hidden feed holes to cooperate with a strip advancing mechanism and which will not interfere with the normal processing of the pressure sensitive label strip.

BACKGROUND OF THE INVENTION—DESCRIPTION OF PRIOR ART

Pressure sensitive labels have found wide use in various industries today, both at the point of manufacture and also at the point of sale of various items. Some of the reasons for their success are that they require no licking or external device such as a stapling gun, a stringing device or similar article for attachment to the article to be marked or labeled and provide superior adhering properties. It is only necessary to remove the

pressure sensitive label from the backing strip and to place it directly upon the item to be marked or labeled. Pressure sensitive labels are generally provided to the user in the form or rolls in which the pressure sensitive labels themselves are adhered to a backing strip treated or coated for easy release of the labels when desired. The labels may be supplied either in blank or they may be supplied partially punched or imprinted at the desire of the user. Labels are then generally fed from a supply reel through a processing device, which may be an imprinting or punching station, and then to the point at which the label is stripped from the backing strip and used.

Pressure sensitive labels are usually manufactured by laminating together a strip of label stock and a strip of release material with a suitable adhesive therebetween. The label stock and release material start coextensive in length and width. The labels are then usually die cut to a predetermined configuration with that portion of the label stock lying between the labels and along the edges cut away as waste. The release material remains intact.

In order to advance the label strip from a supply reel, through an imprinting or punching station, if such be employed, and then to the using point it is necessary to provide a drive force. This has been accomplished by a feed arm which engages the edge of a label attached to the release material and pushes the strip along. However such a feed device quite often damages the label, separates it from the release material, or results in improper feed, and so alternatively it has become common to provide a feed which applies the force directly to the backing strip. Most of the later techniques employed at this time may be catergorized in two fashions. They either involve pressure contact upon the backing strip itself by means of a series of pressure rollers; or involve the engagement of a slotted arm, or the pins of a pin feed roller, with the side walls of apertures located in the backing strip. The use of pressure rollers sometimes results in a somewhat erratic operation due to variations in the pressure placed upon the rollers because of wear, the accumulation of dirt, or variations in the size of the labels.

The other techniques, involving an arm engaging a slot, or a series of pins upon a pin roller engaging side walls of apertures in the backing material of the label strip generally diminishes the number of labels which may be affixed to a given length of backing strip. For example, considering a series of one inch label placed apart on a release strip by the distance required for the location in said release strip of apertures to accept the pins of a pin roller; these one inch labels will be spaced apart possibly three-sixteenths of an inch resulting in a net reduction of the total number of labels available on a given length of strip by some 19%. Thus in order to get a given quantity of labels it is either necessary to increase the size of the roll of labels or to change the reel a number of times. In the former arrangement, the additional size of the roll usually adds weight beyond the capacity of the equipment and cannot be accommodated. In the later case it will require greater operator attention and diminish the number of machines which he may be able to attend at one time.

A partial solution to this problem as shown by the prior art is the use of a backing strip which is far wider than

the width of the labels to be applied. The corners of the labels are then removed in an arcuate fashion, in one approach, so that the apertures for the pins of the pin advance roller may fit in the backing strip and within the removed arcuate corners of two adjacent labels. The arrangement produces some difficulty in that direct presure may be brought to bear upon the edges of the label causing the label itself to be crinkled or torn and further reduces the usable label surface. In a further approach the feed holes are disposed to the sides of the label area. This requires a larger label handling system.

In all of the prior art situations where the feed apertures are located outside the periphery of the label the amount of waste material that must be stripped away is significant and costly.

The provision of feed holes in the release material within the periphery of the label has not in and of itself been found to be the solution to the problem. The adhesive on the back of the label will migrate through such an aperture onto an adjacent label and damage same. To replace such apertures by crossed slits which open to receive a pin feed drive is furthermore not the cure since this results in an undefined feed surface which will vary depending on the nature of the feed and the release material. An undefined feed surface may result in improper feed and poor location of the label in the printing or punching station.

SUMMARY OF THE INVENTION

The present invention obviates all of these difficulties by providing a unique arrangement wherein the labels may be placed in either an abutting arrangement, or a spaced arragement, such as not to waste the space normally necessary for locating the feed holes. The present invention employs a series of die cuts in the release material which do not extend through the label stock. The die cuts clearly define the feed surface and encircle an internal portion of release material. Thus the label adhesive remains covered and cannot migrate. In addition when the label arrives at the imprinting or punching station it presents a level surface thereto and not one which is in any way unsupported. As the label is stripped from the release material the internal portion will stick to the back of the label, if the die cut forms a closed configuration, thus freeing the feed holes for cooperation with an appropriate pin feed. Due to the small size of the internal portion the surface available for adhesion of the pressure sensitive label to the material to be marked or labeled is not greatly diminished and there is no interference with the ability of the label to adhere to the surface to be marked. In a further embodiment the die cutting of the feed holes is not made complete and it is only upon the action of the pins against the preformed pin feed holes that the apertures are exposed to the pins providing a form of chadless label strip construction.

It is therefore an object of this invention to provide an improved form of pressure sensitive label strip construction and the method for making same.

It is still another object of this invention to provide a novel form of pressure sensitive label strip construction wherein feed holes are provided within the backing strip and within the label area but which do not extend through the label.

It is still another object of this invention to provide a novel form of pressure sensitive label strip construction wherein feed holes are die cut into the backing strip only and within the label area and do not extend through the label and which are exposed by the action of the removal of the label from the backing strip such as to provide clear feed surfaces.

It is still another object of this invention to provide a novel form for pressure sensitive label strip construction and method of making same wherein partially die cut feed holes are mounted below the label and within the backing strip only said feed holes being within the label area,

these feed holes being exposed at an advancing station by means of pins of a pin advancing feed itself.

Other objects and features of the invention will be pointed out in the following description and claims and illustrated in the accompanying drawings, which disclose, by way of example, the principle of the invention, and the best modes which have been contemplated for carrying them out.

BRIEF DESCRIPTION OF THE DRAWINGS

In the drawings:

FIG. 1 is a side elevation in highly schematic form of a pressure sensitive label strip handling device including a pressure sensitive label strip processing means.

FIG. 2 is a isometric view of a pressure sensitive label strip constructed in accordance with the basic concepts of the invention.

FIG. 3 is a sectional elevation taken along the line **3—3** of FIG. 2 and showing in greater detail the construction of the pressure sensitive label strip constructed in accordance with the basic concepts of the invention.

FIG. 4 is a bottom view of a pressure sensitive label which has been removed from the backing strip.

FIG. 5 shows an alternative construction of the pressure sensitive label strip of FIG. 2.

FIG. 6 shows a further pressure sensitive label strip construction embodiment.

FIG. 7 shows a further form of pressure sensitive label construction.

FIG. 8 is a simplified schematic showing of the operation of a pin feed roller with the label strips constructed in accordance with FIGS. 6 and 7.

Similar elements will be given similar reference characters in each of the respective figures.

Turning now to FIG. 1 there is shown a side elevation in highly schematic form of a device for handling and processing pressure sensitive labels. The device is generally shown to have a base **10** to which is attached a supply reel support structure **12** upon which is placed a reel **14** containing a coiled pressure sensitive label strip, which includes a backing strip **22** of suitable release material as well as pressure sensitive labels **20**. The pressure sensitive label strip is then fed from reel **14** through a label processing station **16**, which may include label imprinting and punching devices or other similar devices such as reading means etc. After leaving processing station **16**, the label strip is passed over a sharp or small radius of curvature separator point **18**, at which point, due to the sharp bending of backing strip **22**, a label, such as **20**, is caused to separate from backing strip **22**, which is continued over a guide roller **24** to the pins of a pin advance roller **26** and finally into a waste bin **28**. As can be seen, it is solely the action of the pins of pin roller **26** engaging the sidewalls of feed holes **30** in backing strip **22** which causes the movement of the pressure sensitive label strip from reel **14** through procesisng station **16** to waste basket **28**.

Turning now to FIG. 2 the construction of the pressure sensitive label strip may be better understood. Backing strip **22** is arranged to be of the same width or slightly in excess of the width of pressure sensitive labels **20**. As can be seen, each of pressure sensitive label **20** covers a set of die cut pin feed holes **30** in backing strip **22**. By permitting internal portions or inserts **32** of strip **22** to remain with the label strip there is no possibility of adhesive migration; or label destruction during the printing or punching operation which may take place within processing station **16**. If internal portions **32** were removed and printing were attempted tearing of the label or smearing or distortion of the printing might occur. Leaving internal portions **32** within feed holes **30** results in no discernible difference in the amount of support for each label **20** at any point along its width or length.

At separator point **18** backing strip **22** is caused to move downwardly and labels **20** move forwardly there-

from as shown more clearly in FIG. 1. This will be described below. Internal portions **32** remain with their associated label **20** as it leaves backing strip **22** as shown at **32***a* in FIG. 4. Thus the feed holes, such as those shown at **30***a* (FIG. 2) in the portion of backing strip **22** already stripped of labels **20** will have clearly defined side walls for interaction with the pins of pin advance roller **26** to be described below.

Labels **20** are generally constructed of 2½ to 4 point paper coated with an adhesive layer. Backing strip **22** may be of glassine or some other similar material permitting rapid release of pressure sensitive labels **20**. With certain materials, used as backing strip **22**, it is necessary to put a release coating on backing strip **22**, to insure that pressure sensitive labels **20** may be more easily released from backing strip **22** without the destruction of either labels **20** or backing strip **22**. In the arrangement shown in FIG. 2 it can be seen that labels **20** were placed in abutment with one another upon backing strip **22**, there being no spacing necessary between adjacent labels **20**. Depending upon the size of the label or the label strip advancing device it may be desirable to place pin feed holes **30** beneath selected ones of the labels **20**, for example, at every second or third label. Additionally, it may be desirable to place but a single feed hole **30** at each selected label **20** along the strip.

Referring to FIG. 3 there is a side view of a label strip taken along the line **3—3** of FIG. 2. Labels **20***b*, **20***c*, and **20***d* are shown in their normal position in engagement with backing strip **22** and over individual feed holes **30***b*, **30***c*, and **30***d*. It should be noted that feed holes **30***b*, **30***c*, and **30***d* have been fully die cut but that the internal portions **32***b*, **32***c*, and **32***d* have not been removed. Label **20***a* (FIGS. 2 and 3) is shown with its associated backing strip **22** passing about separator point **18** and as it stands out in a plane along the direction in which it was formerly traveling. It can be seen that label **20***a* takes with it internal portions **32***a* leaving feed holes **30***a* (only one visible in FIG. 3) in backing strip **22** exposed so that the side walls thereof may coact with the feed means. In this position the label **20***a* may be removed by hand for application to an item to be marked; or it may be applied by mechanical means.

Turning now to FIG. 4 there is shown a bottom view of the label **20***a* of FIG. 3 showing internal portions **32***a*. The presence of two feed holes for the advancement of backing strip **22** through processing station **16** results in only approximately 2.5% of the bottom surface, that is the adhesive coated surface of the label **10***a* being lost. This amount of loss is not significant and will not prevent the proper adherence of pressure sensitive label **20***a* to the item to be marked.

This type of arrangement provides a chadless backing strip arrangement in what would otherwise be a chad arrangement. For example, in a comparable punch paper tape if the feed holes were fully die cut the internal portions would be removed by the sprocket of the paper tape advance mechanism and would produce loose portions, commonly known as chad. However, in this arrangement because of the adherence of the so-called chad to the adhesive bottom portion of pressure sensitive label **20***a* the device provides a chadless mode of operation.

FIG. 5 shows a further arrangement of pressure sensitive labels **20** with respect to backing strip **22**. In this arrangement, labels **20** are placed in a spaced arrangement along the length of backing strip **22**. Such an arrangement may be necessitated by the particular type of imprinting device used which is not recycled fast enough to be able to handle labels in the abutted arrangement as is shown in FIG. 2. Feed holes **30** are completely die cut into the backing strip **22** below labels **20** and internal portions **32** remain with labels **20** during the time of its travel from reel **14** through processing station **16** until application at the point of separator **18**. The over-all operation of this construction is similar to that described with reference to FIGS. 2 to 4.

Turning now to FIG. 6 there is shown a further type of chadless operation in which labels **20** are placed in close abutment with backing strip **22**. However, in this instance feed holes **40** are formed in backing strip **24** with an incomplete geometric configuration to present flap type internal portions **42** within the die cut lines of serverance. In this case, as in the cases described above the die cutting is within the backing strip only and does not extend through the label material.

Referring to FIG. 7 there is shown a spaced arrangement of the individual labels **20** upon backing strip **22** in a manner similar to that shown with reference to FIG. 5. The variation of this construction over that of FIG. 5 is that feed holes **40** are cut in a manner similar to that described with reference to FIG. 6, that is feed holes **40** do not represent completely closed geometric figures but are incomplete geometric figures which may take the shape of an over-all circular pattern, rectangular, triangular, square or any other convenient geometric form.

Turning now to FIG. 8 there is shown the pin roller **26** interaction with the side walls of an aperture **40** of backing strip **42**. In this figure for simplicity's sake each of the labels have been removed but it should be understood that the general movement of the labels will be similar to that described with reference to FIGS. 2 and 3. Even after backing strip **42** has passed separator point **18**, feed holes **40** remain with internal portions **42** in the closed position until such time as one of the pins of pin roller **26** engages a portion **42** and forces it to be displaced. It can be seen from FIGS. 6 and 7 that the feed holes are die cut in such a manner that the leading edge of the feed hole has been cut whereas the trailing edge has not. Therefore, the leading edge will yield to contact with the pins of pin roller **26** and will cause internal portions or chad **42** to be pivoted about its back, anchored, uncut point. With this arrangement, there is no loss of adhesive surface of the individual labels **20** as is true of the labels **20** shown in FIG. 2 wherein the feed holes are completely cut and the inserts remain with the labels. There again the side walls of apertures **40** are clearly defined for coaction with the pins of pin feed roller **26**.

While there have been shown, described and pointed out the fundamental and novel features of the invention as applied to the preferred embodiments, it will be understood that various omissions and substitutions and changes of the form and details of the devices illustrated and its operation may be made by those skilled in the art, without departing from the spirit of the invention.

I claim:

1. The method of making a label strip adapted to be advanced through a label processing device comprising:

(a) providing an elongated laminated strip formed by laminating a label material to a releasable supporting material by means of a normally tacky adhesive layer;

(b) die cutting individual labels in an abutting relationship through said label material without at the same time die cutting a label shape into said supporting material; and

(c) die cutting a plurality of individual feed holes by completely severing said releasable supporting material about the circumference of said feed holes so as to leave an internal cut portion within each of said feed holes without at the same time die cutting into said label material thereby providing at least one feed hole associated with and completely under-

lying each of said labels, and further, preventing the adhesive layer underlying the internal cut portions from contacting any other material which may be adjacent the label strip by leaving the internal cut portions attached to the label strip.

2. The method according to claim 1 wherein said feed holes are closed geometric shapes.

3. The method according to claim 2, wherein said individual labels are die cut in a spaced apart relationship.

4. The method according to claim 1 wherein said feed holes are incomplete geometric shapes.

5. The method according to claim 4, wherein said individual labels are die cut in a spaced apart relationship.

6. The method according to claim 1, wherein there is a pair of feed holes associated with an completely underlying each of said die cut labels.

References Cited

UNITED STATES PATENTS

3,265,553	8/1966	Kind et al.	156—517
2,679,928	6/1954	Bishop, Jr., et al.	156—268
3,032,463	5/1962	Morgan	156—267
3,093,528	6/1963	Reich	156—247
2,650,182	8/1953	Green	156—252
2,303,346	12/1942	Flood	156—252
2,516,487	7/1950	Schlicksupp	156—541
2,610,134	9/1952	Hoblick	156—252

CARL D. QUARFORTH, Primary Examiner

R. S. GAITHER, Assistant Examiner

U.S. Cl. X.R.

156—247, 248, 269, 522, 514