Feb. 12, 1935. B. L. STEVENSON 1,991,126

CLOSURE

Filed Sept. 12, 1933 3 Sheets-Sheet 1

Fig. 1.

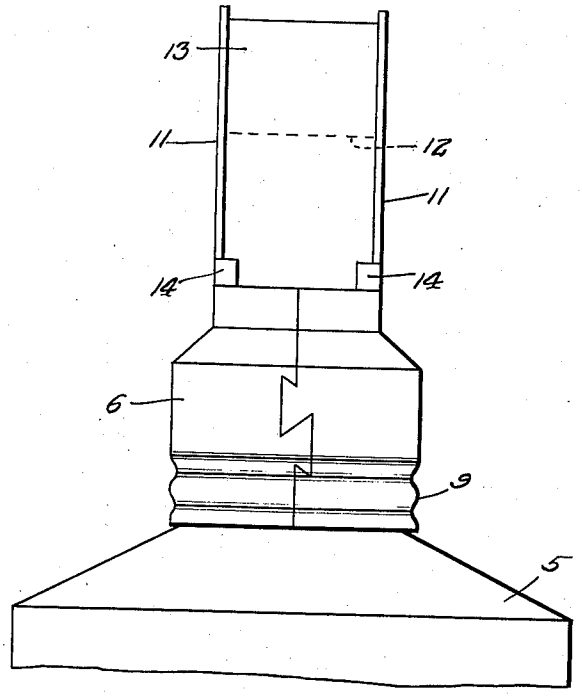

Fig. 5.

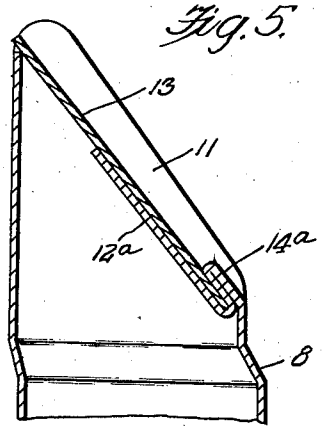

Fig. 6.

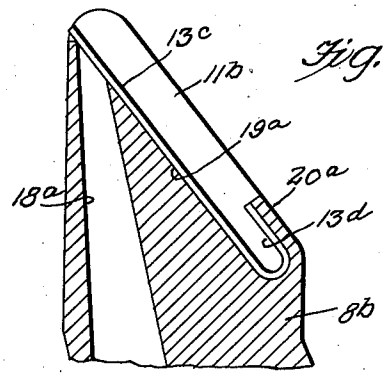

Inventor

Boyd L. Stevenson,

By Clarence A. O'Brien

Attorney

Feb. 12, 1935. B. L. STEVENSON 1,991,126

CLOSURE

Filed Sept. 12, 1933 3 Sheets-Sheet 2

Fig. 2.

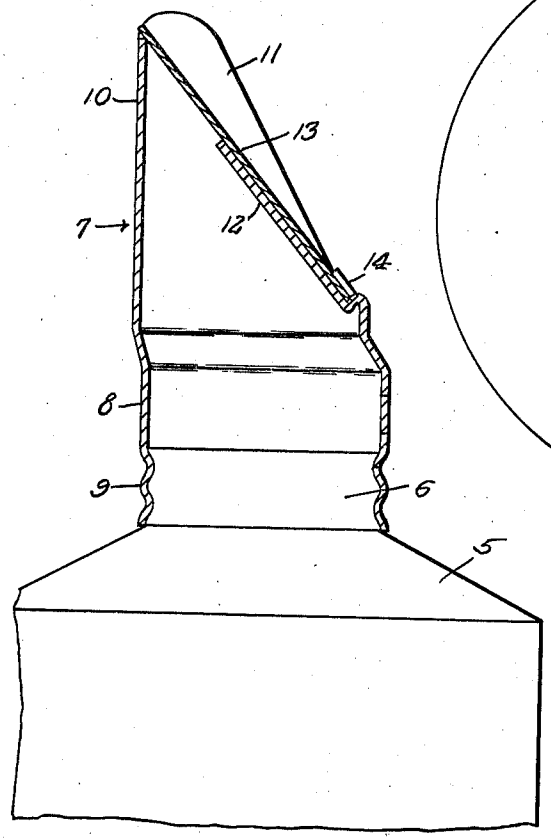

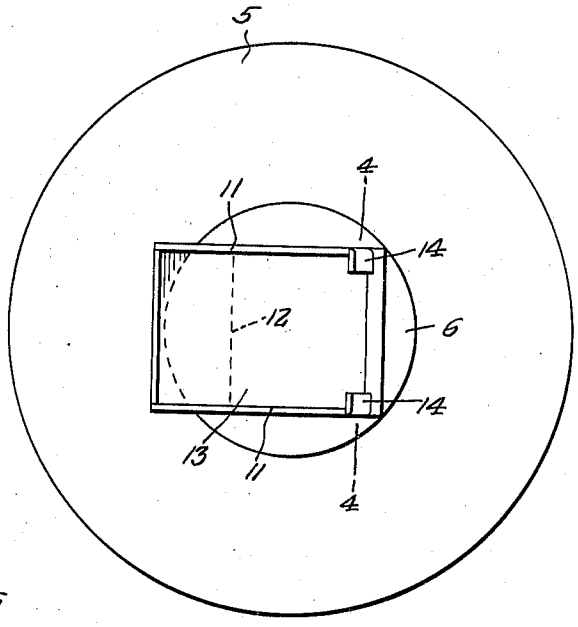

Fig. 3.

Fig. 4.

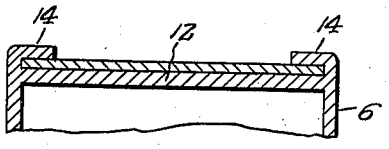

Fig. 7.

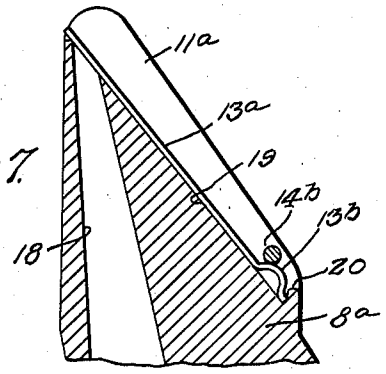

Inventor

Boyd L. Stevenson,

By Clarence A. O'Brien

Attorney

Feb. 12, 1935. B. L. STEVENSON 1,991,126

CLOSURE

Filed Sept. 12, 1933 3 Sheets-Sheet 3

Fig. 8.

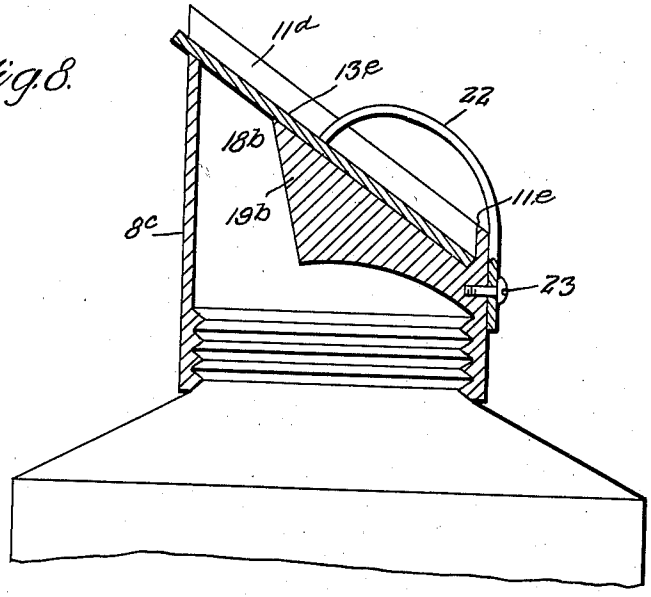

Fig. 10.

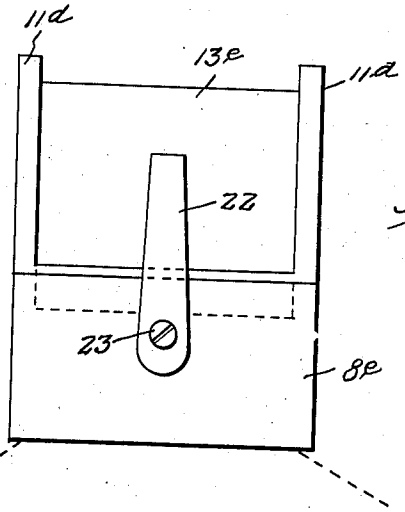

Fig. 9.

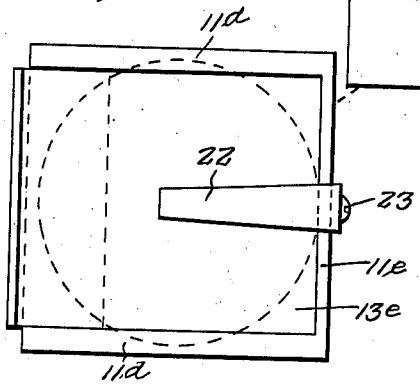

Inventor

Boyd L. Stevenson,

By Clarence A. O'Brien

Attorney

Patented Feb. 12, 1935 1,991,126

UNITED STATES PATENT OFFICE

1,991,126

CLOSURE

Boyd L. Stevenson, Effingham, Ill.

Application September 12, 1933, Serial No. 689,123

7 Claims. (Cl. 221—60)

This invention appertains to new and useful improvements in closures and more particularly to a novel form of cap for collapsible paint or paste tubes.

The principal object of the present invention is to provide a sharp opening closure for a collapsible tube which will automatically open when subjected to the force of the contents of the tube under pressure.

Other important objects and advantages of the invention will become apparent to the reader of the following specification.

In the drawings:

Figure 1 represents a side elevational view of the improved cap.

Figure 2 represents a vertical sectional view through the cap.

Figure 3 represents a top plan view of the cap.

Figure 4 represents a fragmentary detailed sectional view taken substantially on line 4—4 of Figure 3.

Figure 5 represents a vertical fragmentary sectional view through a modification of the invention.

Figure 6 represents a fragmentary vertical sectional view through the third form of the invention.

Figure 7 represents a fragmentary vertical sectional view through the fourth form of the invention.

Figure 8 represents a vertical sectional view through the fifth form of the invention.

Figure 9 represents a top plan view of the form of the invention shown in Figure 8.

Figure 10 represents a side elevational view of the form of the invention shown in Figure 8.

Referring to the drawings wherein like numerals designate like parts, it can be seen in Figures 1, 2 and 3 that numeral 5 generally refers to a collapsible paint or paste tube having a threaded neck 6. Numeral 7 generally refers to the novel cap structure which is provided with a tubular portion 8 having a threaded end portion 9 engageable with the neck 6 of the tube 5. The upper portion of the cap is formed to provide a vertical back wall 10, vertical side walls 11—11, these side walls 11 tapering upwardly as shown in Figure 2. The front wall 12 is inclined toward the back wall 10, in a direction to meet the upper end of the said back wall 10. This front wall 12 is spaced at its upper end from the upper end of the back wall 10 while the spring plate 13 retained against the front wall 12 by inturned lug 14 on the side walls 11 extends over the space between the upper end of the wall 12 and the upper end of the wall 10 to normally close the same and to tensionally engage the upper end of the wall 10 as in the manner substantially shown in Figure 2. Obviously, the spring plate 13 functions snugly between the side walls 11—11 and obviously when the contents of the tube 5 are placed under pressure when the tube is being squeezed in the hand, the pressure of the contents against the spring plate 13 will flex the same so as to permit some of the same to expel between the upper end of the spring plate 13 and the upper edge of the back wall 10.

The form of the invention shown in Figure 5 is the same as that shown in Figure 1 with the exception instead of the lugs 14, an upturned flange 14*a* is provided at the lower end of the front wall 12*a* and between this flange 14*a* and the front wall 12*a* the lower end of the spring plate 13 is engaged and retained.

The form of the invention shown in Figure 7 consists of a solid head 8*a* formed with a passageway 18 through which paste or paint can be forced from the tube 5 to which it can be suitably attached. The upper portion of the head 8*a* is inclined as at 19 and upstanding flanges 11*a*—11*a* are provided at each side of this inclined portion 19. Numeral 20 represents a rib at the lower edge of the inclined portion 19 of the head while numeral 14*b* represents a cross pin between the lower end portion of the flanges 11*a* as shown in Figure 7. Numeral 13*a* represents the spring plate which at its lower end is provided with a transverse corrugation 13*b* which can be sprung between the pin 14*b* and the rib 20. In this position the plate 13*a* is anchored with its upper end closing the upper end of the passageway 18.

The form of the invention shown in Figure 6 is similar to that shown in Figure 7 in that the head 8*b* is solid and provided with the passageway 18*a*. The top portion of this head 8*b* is provided with an inclined surface 19*a* against which the spring plate 13*c* can bear so as to close the upper edge of the passageway 18*a*. Numeral 20*a* represents an upturned flange at the lower end of the inclined portion 19*a*, this flange being spaced from the surface 19*a* to afford a pocket within which can engage the back turned portion 13*d* of the plate 13*c*, this portion 13*d* tensionally engaging the end of the flange 20*a* so as not to permit displacement of the plate 13*c*. The plate 13*c* operates snugly between the side flanges 11*b*—11*b*.

Figure 8 shows still another modification of the invention and the same consisting of a cy-

lindrical portion 8c having its upper portion cut off on an inclined plate. The body 19b extends inwardly of the side wall of the cap 8c and has its top surface on a plane with the inclined top of the cap. Side flanges 11d—11d in Figure 8 serve to snugly receive the plate 13e which closes the space 18b between the projection 19b and the opposed side portion of the cap 8c. The lower end of the plate 13e abuts the transverse continuation 11e of the flanges 11d and an elongated leaf spring 22 at one end is secured as at 23 to the side of the cap 8c while the other end is disposed over the upper portion of the cap and disposed inwardly to tensionally bear against the intermediate portion of the plate 13e thus tensionally urging the plate against the projection 19b and the uppermost portion of the side wall of the cap.

While the foregoing specification sets forth the invention in specific terms, it is to be understood that numerous changes in the shape, size and materials may be resorted to without departing from the spirit or scope of the invention as claimed hereinafter.

Having thus described my invention, what I claim as new is:

1. In combination, a container having a discharge neck, said neck being cut off obliquely, said oblique end being provided with a pair of parallel side flanges, said discharge neck having a discharge opening through the extremity of said oblique end with the remaining portion of the oblique end defining a rest, and a tension plate anchored at one end and adapted to fit snugly between said flanges and against said rest to normally close said opening.

2. In combination, a container having a discharge neck, said neck being cut off obliquely, said oblique end being provided with a pair of parallel side flanges, said discharge neck having a discharge opening through the extremity of said oblique end with the remaining portion of the oblique end defining a rest, and a tension plate anchored at one end and adapted to fit snugly between said flanges and against said rest to normally close said opening, said neck being constructed of sheet metal and having a portion at the oblique end folded upon itself to provide a pocket for snugly receiving one end of the said tension plate.

3. In combination, a container having a discharge neck, said neck being cut off obliquely, said oblique end being provided with a pair of parallel side flanges, said discharge neck having a discharge opening through the extremity of said oblique end with the remaining portion of the oblique end defining a rest, and a tension plate anchored at one end and adapted to fit snugly between said flanges and against said rest to normally close said opening, said plate being of spring material and having one end anchored to the oblique end of the neck.

4. In combination, a container having a discharge neck, said neck being cut off obliquely, said oblique end being provided with a pair of parallel side flanges, said discharge neck having a discharge opening through the extremity of said oblique end with the remaining portion of the oblique end defining a rest, and a tension plate anchored at one end and adapted to fit snugly between said flanges and against said rest to normally close said opening, said neck being provided with a pocket at the innermost end portion of the rest, said tension plate being provided with a backwardly disposed spring portion to engage the top wall of the pocket when the same is inserted into the pocket of the neck to maintain the plate proper snugly against the oblique end.

5. In combination, a container having a discharge neck, said neck being cut off obliquely, said oblique end being provided with a pair of parallel side flanges, said discharge neck having a discharge opening through the extremity of said oblique end with the remaining portion of the oblique end defining a rest, a tension plate anchored at one end and adapted to fit snugly between said flanges and against said rest to normally close said opening, and an arcuate-shaped spring element having one end secured to the side of the neck and its opposite end engaging against an intermediate portion of the tension plate to tensionally retain the same against the said rest.

6. In combination, a container having a discharge neck, said neck being cut off obliquely, said oblique end being provided with a pair of parallel side flanges, said discharge neck having a discharge opening through the extremity of said oblique end with the remaining portion of the oblique end defining a rest, and a tension plate anchored at one end and adapted to fit snugly between said flanges and against said rest to normally close said opening, said flanges being provided with inwardly disposed members for engaging against the outer side of the tension plate and retaining the same snugly against the said rest.

7. In a container having a discharge end, said discharge end being provided with a construction substantially closing said discharge end to define a rest and a relatively small discharge opening, and a spring closure plate adapted to exert its tension against said rest and to project a substantial distance beyond said rest to normally close the said discharge opening.

BOYD L. STEVENSON.