July 25, 1939. R. R. CHAPPELL ET AL 2,167,417

RECORDING PAPER LOCKING DEVICE

Filed July 11, 1936

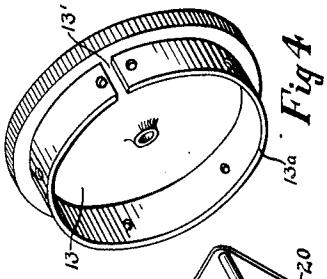

Fig 4

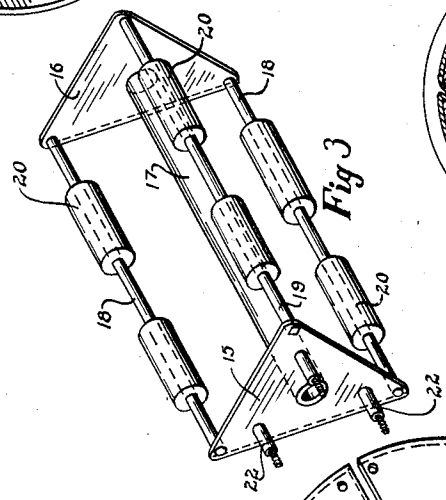

Fig 3

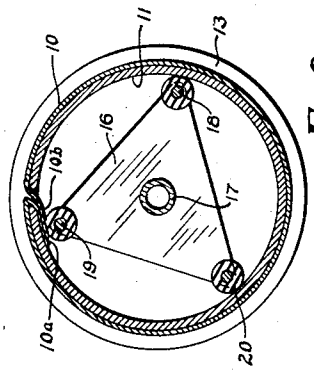

Fig 6

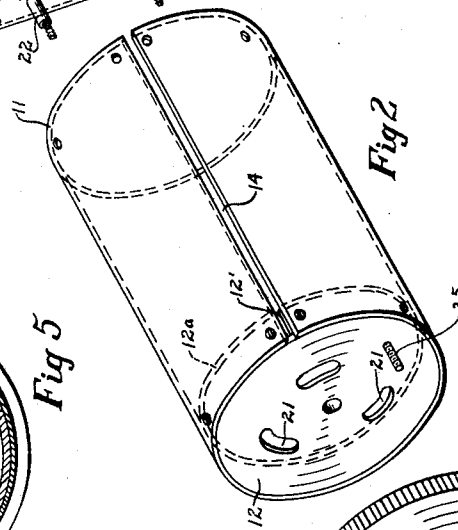

Fig 2

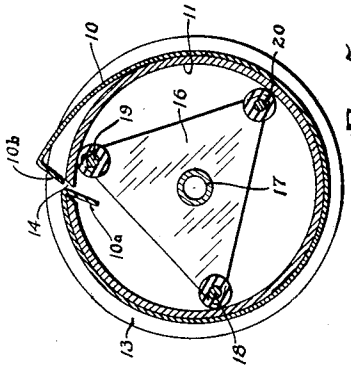

Fig 5

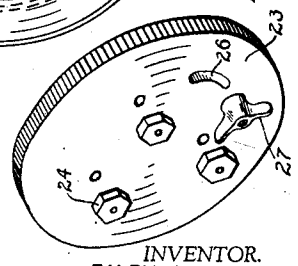

Fig 1

INVENTOR.
RALPH R. CHAPPELL
RUTGER B. COLT

BY Stephen Berstrik
ATTORNEY.

Patented July 25, 1939

2,167,417

UNITED STATES PATENT OFFICE

2,167,417

RECORDING PAPER LOCKING DEVICE

Ralph R. Chappell, Richmond, Va., and Rutger B. Colt, Baltimore, Md., assignors to Bendix Aviation Corporation, South Bend, Ind., a corporation of Delaware

Application July 11, 1936, Serial No. 90,226

16 Claims. (Cl. 101—415.1)

This invention relates to paper holding apparatus, such as may be employed in connection with recording mechanisms, and more particularly to means for mounting and securing record sheets or charts.

One of the objects of the present invention is to provide novel means for securing chart record paper to cylindrical drums, or other supporting means therefor.

Means have been heretofore provided for securing record sheets on cylindrical supporting members but considerable skill and practice in applying and fastening said record sheet thereto is required if a firm application of the same and accurate recording results are to be obtained. Additionally, the fastening means heretofore provided on devices of this character have not been entirely reliable insofar as holding the sheet taut and in proper position is concerned, and the same often necessitates the mutilation of the ends of the paper sheet or other recording surface. It is also extremely difficult with the means heretofore provided to replace the record sheet on the drum in the same relative position in which the same was previously applied.

It is accordingly another object of the invention to provide novel apparatus whereby a record sheet may be readily secured to and removed from a cylindrical drum without the exercise of special skill and without in any way multiating or damaging said sheet.

Still another object is to provide novel mounting means for a record chart, which means is simple, both in construction and operation, and is extremely reliable in use.

A further object is to provide novel means whereby a flexible member may be held in close engagement with a curved supporting or backing plate and under tension thereon so that the same may be removed from said plate and readily replaced thereon an indefinite number of times in the same relative position with respect to the supporting plate.

The above and further objects and novel features of the invention will more fully appear from the following detailed description when taken in connection with the accompanying drawing. It is to be expressly understood, however, that the drawing is for the purpose of illustration only and are not designed as a definition of the limits of the invention, reference being primarily had for this latter purpose to the appended claims.

In the drawing wherein like reference character refer to like parts throughout the several views:

Figs. 1 to 4, inclusive, are isometric views, illustrating the various elements of one embodiment of the invention, said figures constituing what may be termed an explosive view; and,

Figs. 5 and 6 are cross sectional end views of the assembled device, showing the internal structure of the same in unlocked and locked position, respectively, the sections being taken at right angles to the axis of the supporting drum.

The single embodiment of the present invention is illustrated, by way of example, in the drawing in the form of a cylindrical member on which a record sheet or chart is adapted to be secured by novel means mounted within the drum, said novel means being adapted to yieldingly clamp the ends of the record sheet against the inner wall of said drum and to frictionally hold said ends against withdrawal. Said means also assists in pulling the record sheet taut on the drum so as to insure the production of an accurate recordation.

In the specific form of the invention shown, the supporting means for a record sheet 10 of any suitable material, such as paper, is constituted by a hollow drum which is fabricated from a sheet metal plate 11 that is bent to the desired curvature and secured by means of a plurality of small screws to the flange portions 12*a* and 13*a* of a pair of end plates 12 and 13. Said flange portions are split as shown at 12' and 13', and the length of plate 11 in the direction of curvature is slightly less than the perpihery of said flanges so that the edges thereof, which are preferably bevelled, do not meet but coincide with the edges of slots 12' and 13', thereby forming a longitudinal slot 14 in the surface of the fabricated drum.

Novel locking means adapted to be housed within drum 11 are comprehended by the present invention, whereby record sheet 10, which surrounds the drum and has the ends thereof extending into slot 14, may be quickly and tautly applied thereto without fuss or special skill, and whereby the same record sheet or chart may be applied to the drum an indefinite number of times in the same relative position on the drum without any detrimental or damaging effects whatever on the paper or chart. Said novel means assists the operator in tautly applying the record sheet and locks the same in position without danger of the same becoming loose during operation or use. In the form shown, said locking means are consttiuted by an assembly or internal structure comprising a pair of substantially equilateral triangular plates 15 and 16 secured to

opposite ends of a hollow shaft or member 17 and, if desired, similar intermediate plates may be provided. Extending between said plates, and mounted thereon adjacent the apices thereof and parallel to the axis of drum 11, are a pair of rotatably mounted tie rods 18, 18 and a third tie rod 19, which is fixed against rotation relative to plates 15, 16. One or more cylindrical members 20 are mounted on each of said tie rods, said members being preferably constructed of some yielding or resilient material, such as rubber, for example, between which and the material used as a recording sheet the coefficient of friction is comparatively high. The diameter of member 20 is such that the peripheral surface of each of the same engages the inner surface of drum 11. Hence, when the locking assembly is inserted in drum 11, the same will be yieldingly supported therein for rotation relative thereto. Members 20 are tightly fitted on tie rods 18 and 19, or fixed thereto in any suitable manner to prevent relative rotation therebetween, so that when the locking assembly is rotated relative to drum 11, members 20 on rod 19 are adapted to slidably and frictionally engage the inner surface of the drum or the ends of sheet 10, in a manner and for a purpose to be more fully pointed out hereafter.

Means are provided for limiting the movement of the above described locking means in drum 11, and means are also provided, exterior of said drum, for actuating the locking assembly through the limited range of movement thereof. Said means, in the form illustrated, comprise a plurality of arcuate slots or openings 21 in end plate 12 of the supporting drum, the center of curvature of said arcuate openings coinciding with the longitudinal axis of the drum. A plurality of posts 22 are mounted on and extend axially from plate 15 of the locking assembly and are so positioned thereon as to extend through arcuate openings 21 for sliding movement therein. Posts 22 also extend through a disk member 23 which has a slightly greater diameter than drum 11. Said disk is held on posts 22 and in sliding engagement with end plate 12 by means of nuts 24 which are threaded onto the outer, threaded ends of said posts. It will thus be seen that, by holding drum 11 stationary and rotating disk 23, the internal structure or locking assembly of Fig. 3 may be arcuately moved a distance determined by the length of openings 21. For the purpose of aiding the operator in holding drum 11 stationary to permit actuation of the locking assembly, end plate 13 also has a slightly larger diameter than drum 11 and the periphery thereof is knurled, as is also the periphery of disk 23.

In the embodiment of the invention shown, the collars or unthreaded portions of posts 22 are substantially equal to or slightly greater than the combined thicknesses of plate 12 and disk 23, so that nuts 24 will tighten against the shoulder on said posts and exert no pressure on the disk. By reducing the length of one or more of the unthreaded portions of posts 22, it will be seen that pressure may be exerted, by one or more of nuts 24, to thereby hold disk 23 in frictional engagement with plate 12 and accordingly hold the locking assembly in any desired position within the range of movement thereof. Special means are provided, however, for this latter purpose and in the illustrated form comprise a threaded stud 25 rigidly secured to and extending axially from end plate 12 through an arcuate slot 26 in disk 23. A wing nut 27 adapted to be threadedly received by stud 25 may be screwed into frictional engagement with disk 23 and thus hold the internal locking assembly in the desired position.

In assembling the elements illustrated in Figs. 1 to 4, inclusive, the locking assembly of Fig. 3 is inserted into drum 11—13 with posts 22 extending through openings 21, so that the non-rotatable tie rod 19 is adjacent slot 14 and movable from one side thereof to the other in frictional engagement with the inner surface of the drum. Disk 23 is then secured on the projecting ends of posts 22 by means of nuts 24, and end plate 13 is secured in the opposite end of the drum by means of set screws, the relative positions of said plate and drum being such that slot 13' coincides with longitudinal slot 14.

In order to apply record sheet 10 to drum 11—13, said sheet is preferably prefolded at one end and said pre-folded portion 10*a* is inserted into slot 14, as seen in Fig. 5. The remainder of sheet 10 is curled around the drum and the opposite end 10*b* thereof also inserted into slot 14. As the locking assembly is then rotated in a counterclockwise direction, as viewed in Fig. 5, member 20 on rod 19 slidably and frictionally engage end 10*b* of the record sheet, and as said member moves across slot 14, the same is effective to frictionally pull sheet 10 taut and clamp ends 10*a* and 10*b* against the inner wall of drum 11—13, members 20 being adapted to yield for accommodating the thicknesses of said ends. The parts are shown in locking position in Fig. 6. If sheet 10 is removed and it is desired to mount the same again, the pre-folded portion 10*a* may be reinserted into slot 14 and the sheet locked in position in the above manner in the same relative position on drum 11—13 in which it was previously applied.

In order that the above described device may be rotatably or otherwise suitably mounted, such as for use in recording apparatus, end plates 12 and 13 are provided with centrally positioned bosses or bearings which are adapted to engage a rotatable shaft or other suitable supporting means (not shown).

There is thus provided novel means for locking a sheet of flexible material, such as a paper record chart, on a cylindrical drum or other suitable supporting member, whereby said chart may be readily and quickly applied and locked in position on said drum by any ordinary mechanic. The novel paper locking means provided also assists in drawing the chart taut and in close engagement with the outer surface of the drum, and reliably maintains the same in taut position without damaging the paper. Additionally, with the novel fastening means provided hereby, a record sheet may be secured on a supporting surface in the same relative position an indefinite number of times without the necessity for the exercise of any special skill. The device provided is also extremely simple both in construction and operation, the same comprising only a small number of comparatively rugged parts, thereby reducing the probability of failure to a minimum.

Although only a single embodiment of the invention has been illustrated and described in detail, it is to be expressly understood that the same is not limited thereto, but that various changes may be made in the design and arrangement of parts illustrated without departing from the spirit and scope of the invention, as will now be readily understood by those skilled in the art. For a definition of the limits of the invention, reference will be had primarily to the appended claims.

What is claimed is:

1. In apparatus of the class described, a hollow drum having a longitudinal slot in the surface thereof, locking means within said drum comprising a skeleton structure having a plurality of spaced members, each of said members bearing against said drum and movably supported by the internal surface thereof, and means for relatively rotating said locking means and drum.

2. In apparatus of the class described, a hollow drum having a longitudinal slot in the surface thereof, locking means within said drum comprising a skeleton structure having a plurality of spaced members, each of said members bearing against said drum and movably supported by the internal surface thereof, means for relatively rotating said locking means and drum, and means for limiting said relative movement in two directions.

3. In apparatus of the class described, a cylindrical supporting member having a longitudinal slot therein, locking means in said member composed of yielding material and adapted to frictionally engage the inner surface thereof, and means for moving said locking means relative to said slot.

4. In apparatus of the class described, a cylindrical supporting member having a longitudinal slot therein, locking means in said member composed of yielding material and adapted to frictionally engage the inner surface thereof, means for moving said locking means relative to said slot, and means for limiting said relative movement.

5. In apparatus of the class described, a cylindrical supporting member having a longitudinal slot therein, locking means in said member composed of yielding material and adapted to frictionally engage the inner surface thereof, means for moving said locking means relative to said slot, and releasable means for holding said member and yieldable means against relative movement.

6. In apparatus of the class described, a cylindrical supporting member having a longitudinal slot therein, yieldable means in said member adapted to frictionally engage the inner surface thereof, means for moving said yieldable means relative to said slot, means for limiting said relative movement, and releasable means for holding said member and yieldable means against relative movement.

7. In apparatus of the class described, a supporting member having a slot therein, locking means composed of yielding material frictionally engaging a surface of said member adjacent said slot, means for moving said locking means across said slot, and means for limiting the movement of said yieldable means relative to the supporting member.

8. In apparatus of the class described, supporting means having a slot therein, a member composed of yielding material adapted to frictionally yieldingly engage a surface of said means adjacent said slot, means for moving said member relative to said slot, and releasable means for holding said supporting means and member against such relative movement.

9. In apparatus of the class described, supporting means having a slot therein, a member having a surface concentrically disposed throughout its extent and adapted to frictionally engage a surface of said supporting means adjacent said slot, means for moving said member relative to said slot, releasable means for holding said supporting means and member against such relative movement, and means for limiting said relative movement.

10. In apparatus of the class described, a hollow drum having a longitudinal slot therein, a record sheet surrounding said drum and having the ends thereof extending through said slot, and resiliently constructed means comprising a skeleton member within said drum for yieldingly holding the ends of said sheet against the inner wall of said drum.

11. In apparatus of the class described, a hollow drum having a slot in the surface thereof, a sheet of flexible material surrounding said drum with the ends thereof extending through said slot, an angularly movable member in said drum, comprising yielding means, and means for moving said member to yieldingly clamp the ends of said sheet between said member and the wall of said drum.

12. In apparatus of the class described, a hollow drum having a slot in the surface thereof, a sheet of flexible material extending around said drum with the ends thereof extending through said slot, and resiliently constructed means within said hollow drum coacting with said drum for frictionally holding the ends of said sheet against withdrawal.

13. In apparatus of the class described, a hollow drum having a slot in the surface thereof, a sheet of flexible material surrounding said drum and having the ends thereof extending through said slot, and yielding locking means movably supported in said drum comprising a friction member slidably engaging the inner surface of said drum and adapted to clamp the ends of said sheet against said inner surface.

14. In apparatus of the class described, a drum comprising a pair of flanged end plates and a sheet metal plate secured to the flanges of said end plates, said drum having a longitudinal slot in the surface thereof and a plurality of arcuate openings in one end thereof, the centers of curvature of said openings coinciding with the longitudinal axis of said drum, locking means in said drum comprising a plurality of triangular plates, a pair of rotatable tie rods joining opposed vertices of said triangular plates, a third tie rod joining the other vertices and fixed against movement relative to said triangular plates, resilient means on each of said tie rods engaging the internal surface of said drum and a plurality of pins secured to and extending axially from one of said triangular plates and through said arcuate openings, a disk having openings therein for receiving said pins, and means for securing said disk on the latter, whereby said locking means may be rotated through a limited arcuate distance relative to said drum.

15. In apparatus of the class described, a sheet metal drum having a longitudinal slot in the surface thereof and a plurality of arcuate openings in one end thereof, locking means in said drum comprising a pair of parallel end plates, a pair of rods rotatably journalled in said end plates, resilient sleeves mounted on each of said rods and engaging the internal surface of said drum and a plurality of axially extending posts on one of said end plates, a disk exterior of said drum and having openings therein, said posts being adapted to extend through said arcuate openings and the openings in said disk, whereby said locking means may be rotated through a limited arcuate distance relative to said drum.

16. In apparatus of the class described, a hol-

low drum having a longitudinal slot in the surface thereof and an arcuate opening in one end, the center of curvature of said arcuate opening coinciding with the longitudinal axis of said drum, a locking assembly in said drum comprising a pair of end plates and means for connecting the latter including means rigidly secured thereto and adapted to frictionally and yieldingly engage the inner wall of said drum adjacent said slot, a post on one of said plates adapted to extend through said arcuate openings, and means secured on said post exterior of the drum for actuating said locking assembly.

RALPH R. CHAPPELL.
RUTGER B. COLT.