Office de la Propriété Intellectuelle du Canada
Un organisme d'Industrie Canada

Canadian Intellectual Property Office
An agency of Industry Canada

CA 2209970 C 2001/11/06

(11)(21) 2 209 970

(12) BREVET CANADIEN
CANADIAN PATENT

(13) C

(22) Date de dépôt/Filing Date: 1997/07/15

(41) Mise à la disp. pub./Open to Public Insp.: 1998/01/16

(45) Date de délivrance/Issue Date: 2001/11/06

(30) Priorité/Priority: 1996/07/16 (8-185903) JP

(51) Cl.Int.^{6}/Int.Cl.^{6} G10H 3/12

(72) Inventeurs/Inventors:
MIZUGUCHI, Masaaki, JP;
NOGUCHI, Yoshitaka, JP

(73) Propriétaire/Owner:
Yamaha Corporation, JP

(74) Agent: BORDEN LADNER GERVAIS LLP

(54) Titre : INSTRUMENT DE MUSIQUE A PERCUSSION FONCTIONNANT ELECTRONIQUEMENT ET CONCU SELON LA FORME D'UNE TABLE

(54) Title: TABLE-TYPE ELECTRONIC PERCUSSION INSTRUMENT

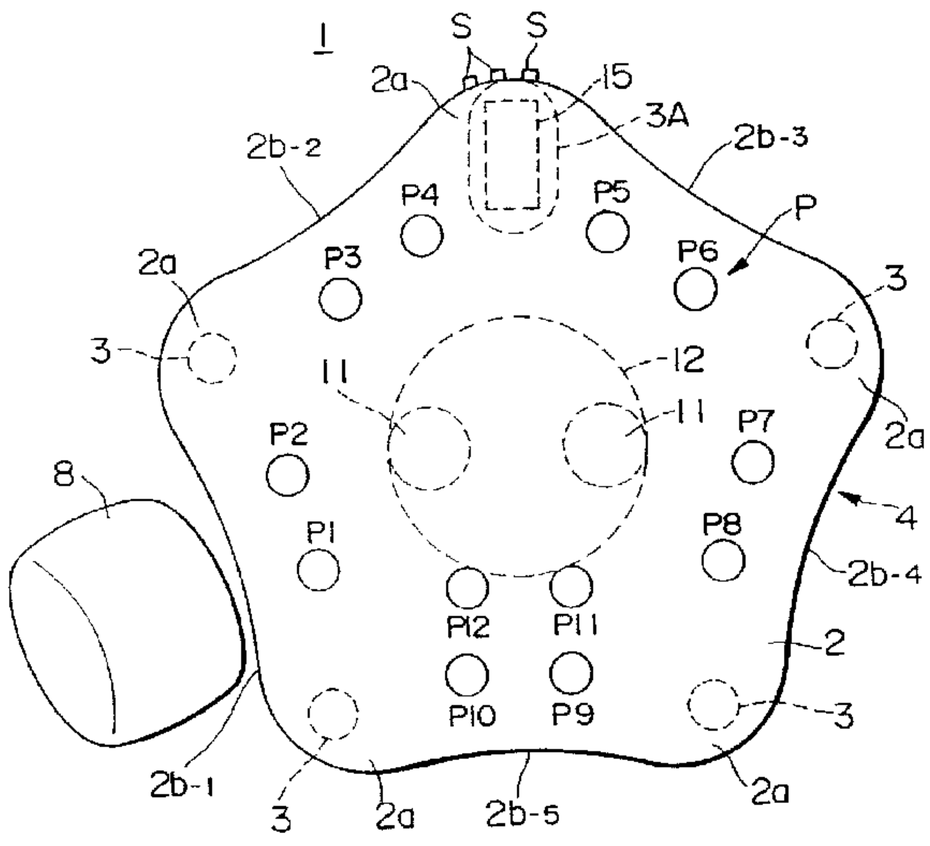

(57) Abrégé/Abstract:
A table-type electronic percussion instrument is constructed of a table top, legs, pads as well as a musical-tone-generation circuit and a speaker system. Herein, the table board has a specific shape such as a pentagon-like shape which enables a number of persons to sit at it. The table top is supported by the legs and is constructed of a base material having a high rigidity and a finishing board like plywood. The finishing board covers a surface of the base material through which holes are formed. The pads are arranged on a surface of the dressing board to coincide with the locations of the holes. Sensors are provided inside of the holes and are attached to the backside of the finishing board. Thus, the sensors are arranged to detect a striking force imparted to any of the pads by a person. The musical tone generation circuit is provided beneath the table board to convert electric signals from the sensors to musical-tone signals. The speaker system is located beneath the table board to generate musical tones (e.g., percussion sounds) based on the musical-tone signals. For example, if the pads are to be reproduce electronic drums and/or electronic cymbals, the speaker system generates drum sounds and/or cymbal sounds when the pads are struck. Thanks to the table-like construction, the electronic percussion instrument can be shared by a number of persons to play an ensemble. Incidentally, the musical-tone-generation circuit contains a mixing circuit which performs mixing operations on the musical-tone signals corresponding to the pads and other musical tone signals supplied thereto. Thus, the musical-tone-generation circuit outputs mixed musical-tone signals, based on which the speaker system generates mixed musical sounds.

ABSTRACT

A table-type electronic percussion instrument is constructed of a table top, legs, pads as well as a musical-tone-generation circuit and a speaker system. Herein, the table board has a specific shape such as a pentagon-like shape which enables a number of persons to sit at it. The table top is supported by the legs and is constructed of a base material having a high rigidity and a finishing board like plywood. The finishing board covers a surface of the base material through which holes are formed. The pads are arranged on a surface of the dressing board to coincide with the locations of the holes. Sensors are provided inside of the holes and are attached to the backside of the finishing board. Thus, the sensors are arranged to detect a striking force imparted to any of the pads by a person. The musical tone generation circuit is provided beneath the table board to convert electric signals from the sensors to musical-tone signals. The speaker system is located beneath the table board to generate musical tones (e.g., percussion sounds) based on the musical-tone signals. For example, if the pads are to be reproduce electronic drums and/or electronic cymbals, the speaker system generates drum sounds and/or cymbal sounds when the pads are struck. Thanks to the table-like construction, the electronic percussion instrument can be shared by a number of persons to play an ensemble. Incidentally, the musical-tone-generation circuit contains a mixing circuit which performs mixing operations on the musical-tone signals corresponding to the pads and other musical tone signals supplied thereto. Thus, the musical-tone-generation circuit outputs mixed musical-tone signals, based on which the speaker system generates mixed musical sounds.

TABLE-TYPE ELECTRONIC PERCUSSION INSTRUMENT

BACKGROUND OF THE INVENTION

Field of the Invention

This invention relates to electronic percussion instruments which are used to generate percussion sounds.

Prior Art

Conventionally, many types of electronic percussion instruments such as electronic drums and electronic cymbals are known. For example, an example of an electronic drum is disclosed in Japanese Patent Publication No. 5-19718, whilst an example of an electronic cymbal is disclosed in Japanese Utility-Model Publication No. 4-3358. These known electronic drums and electronic cymbals have the same basic configuration which is designed to generate electronic sounds. According to their basic configuration, vibrations which occur on pads are converted to electric signals, based on which a musical tone generation circuit produces musical tone signals which are supplied to speakers or headphones to generate electronic sounds. In order to obtain performance feelings which are similar to those of the acoustic instruments corresponding to drums, pads are generally constructed using a flexible film. In the case of electronic cymbals, pads are constructed using a plate made of a plastic having rigidity to provide performance feelings which are similar to those of the acoustic instruments corresponding to cymbals. Both the electronic drum and electronic cymbal are designed to be attached to an instrument stand or a bus drum by means of an instrument holder. Thus, they are played by a single performer.

As described above, conventional electronic percussion instruments are designed to be played by a single performer. In other words, the conventional technology fails to provide an electronic percussion instrument which can be shared by a number of persons but which can arbitrarily generate musical tones designated by any one of the persons. So, when playing an ensemble using conventional technology, it is necessary to provide a number of instruments which are played by the number of performers individually.

SUMMARY OF THE INVENTION

The present invention provides a table-type electronic percussion instrument which can be shared by a number of persons to play an ensemble and which can function as a general-use table as well.

The table-type electronic percussion instrument of this invention is constructed with a table board or top, legs, pads, a musical tone generation circuit and a speaker system. The table board is supported by legs and is constructed of a base material having high rigidity, and a dressing or finishing board. The dressing board covers the top surface of the base material through which holes are formed. The pads are arranged on the surface of the dressing board to correspond with the locations of the holes. Sensors are provided inside of the holes and are attached to a backside of the dressing board. Thus, the sensors are arranged to detect a striking force imparted to each of the pads by a person. The musical tone generation circuit is provided beneath the table board to convert electric signals from the sensors to musical tone signals. The speaker system is located beneath the table board to generate musical tones based on the musical tone signals.

For example, if the pads are to simulate electronic drums and/or electronic cymbals, the speaker system generates drum sounds and/or cymbal sounds when the pads are struck by a person(s).

Thanks to the table-like construction, a number of people can share and perform on the electronic percussion instrument to generate musical tone signals individually for an ensemble. Of course, the electronic percussion instrument of this invention can be used as a general-use table.

BRIEF DESCRIPTION OF THE DRAWINGS

These and other advantages of the subject invention will become more fully apparent as the following description is read in light of the attached drawings wherein:

FIG. 1 is a plan view showing a table-type electronic percussion instrument which is designed in accordance with an embodiment of the invention;

FIG. 2 is a side view of the table-type electronic percussion instrument;

FIG. 3 is a cross-sectional view showing a partial construction of a table board;

FIG. 4 is a side view showing a modified example of the table-type percussion

instrument;

FIG. 5 is a block diagram showing an internal configuration of a musical tone generation circuit; and

FIG. 6 which appears with FIGS. 3 and 4, is a cross-sectional view showing a modified example of the construction of the table board.

DESCRIPTION OF THE PREFERRED EMBODIMENT

Now, a description will be given with respect to a table-type electronic percussion instrument of the preferred embodiment of this invention with reference to drawings wherein like parts will be designated by like numerals; hence, the description thereof will not be repeated.

FIG. 1 is a plan view showing a table-type electronic percussion instrument 1 which is designed in accordance with an embodiment of the invention. FIG. 2 is a side view illustrating the appearance of the table-type electronic percussion instrument 1 taken in side-view, as well as a chair 8. FIG. 3 is a cross-sectional view showing a partial construction of a table board 2 which is an essential element of the table-type electronic percussion instrument 1. Herein, the table-type electronic percussion instrument 1 contains a table-type main body 4 which is constructed using the table board 2 and five legs 3. The table board 2 has a relatively large surface on which pads P (i.e., P1 to P12) are arranged. The table board 2 is supported by the five legs 3. The table board 2 has a pentagon-like shape in plan-view. In a non-performance mode, the table-type electronic percussion instrument 1 can be used as a general-use table which seats five persons. The table board 2 provides five corners '2a', each of which is rounded. A lower face of the corner 2a is supported by the leg 3. A distance which is greater than the width of the chair 8 which normally seats only one person, is set between two legs 3 arranged adjacent to each other. Since the table board 2 is formed in a pentagon-like shape, there are five sides 2b-1 to 2b-5 between the five corners 2a. Herein, each side is formed with a gradually and concavely curved face.

As shown in FIG. 3, the table board 2 is constructed of a base material 5 and a dressing board 6. Herein, the base material 5 is formed by wood in the shape of a board, and has a high rigidity, whilst the dressing board 6 is formed of three-ply wood (i.e., plywood). The dressing board 6 covers the overall surface of the base material 5.

As shown in FIG. 2, two speakers 11 and a net-like cover 12 are attached to the center area of the backside of the base material 5 of the table board 2. The cover 12 is located to cover the speakers 11. Further, twelve holes are formed in the backside of the table board 2. The holes 13 are arranged to surround the cover 12 and are also disposed to match with the pads P1 to P12 respectively. Among the pads, locations of the pads P1 to P8 are determined to be different from locations of the pads P9 to P12. That is, the pads P1 and P2 are located within a certain distance along the side 2b-1; the pads P3 and P4 are located within a certain distance along the side 2b-2; the pads P5 and P6 are located within a certain distance along the side 2b-3; and the pads P7 and P8 are located within a certain distance along the side 2b-4. On the other hand, the pads P9 and P10 as well as the pads P11 and P12 are disposed in lines along the side 2b-5. There are provided a variety of ways to use (or perform on) the pads. For example, the two pads P1 and P2 can be used as electronic drums. In this case, the pad P1 is struck to generate the normal sound of a drum, whilst the other pad P2 is struck to generate a rim shot sound. In the case where the pads P1 and P2 are to be used as electronic cymbals, the pad P1 is struck to generate the normal sound of cymbals, whilst the other pad P2 is struck to generate a cup sound. As for the four pads P9 to P12, two of them can be used as electronic drums while the others are used as electronic cymbals, for example.

The locations of the pads are visually designated (or displayed) by printing characters, marks or pictures on the surface of the dressing board 6 or by attaching sheets to the surface of the dressing board 6. Visual display of the pads is not limited to the above. For example, the pads can be covered by a sheet member such as a place mat (or lunch mat) on which marks, characters or pictures are printed. The mat can be replaced with another mat occasionally. Thus, it is possible to change the look of the room by changing the mat on the table-type electronic percussion instrument 1. Further, it is possible to cover the pads with a tablecloth which provides visual display sections to visually display the pads. In that case, functions of the table-type electronic percussion instrument 1 can be changed over by use of the tablecloth. A sensor 14 such as a piezoelectric sensor is provided to detect the intensity of striking of the pad and to convert it to an electric signal. The sensor 14 is securely fixed to an interior face of the hole 13 which corresponds to a selected area of the backside of the dressing

board 2, wherein the hole 13 is located to match with the pad. Thus, a sensor is provided for each of the pads P1 to P12.

Among the five legs 3, there is provided a hollow leg '3A' (see FIG. 2). The hollow leg 3A is the largest in size as compared with the other legs. A musical tone generation circuit 15 is built into the hollow leg 3A to generate musical tone signals based on electric signals fed from the aforementioned sensors 14. Thus, electronic sounds are produced from the speakers 11 on the basis of the musical tone signals. A control panel is attached to a selected area of a surface of the hollow leg 3A. Herein, a power switch and other switches 'S' are arranged on the panel.

The table-type electronic percussion instrument 1 of FIG. 2 can be modified as shown in FIG. 4. Herein, a control unit CT equipped with a power switch and other switches is located beneath the table board 2 and is supported by a leg 3B which is shorter than the other legs 3. In this modification, it is possible to change the height of the table board 2 by changing the lengths of the legs 3 and 3B.

FIG. 5 is a block diagram showing an internal configuration of the musical tone generation circuit 15 which is connected to the sensors 14. The musical tone generation circuit 15 contains an input detection circuit 16, a musical tone control circuit 17, sound source circuits 18A and 18B, a mixing circuit 19 and an amplifier circuit 20. The input detection circuit 16 performs wave detection and shaping operations on the electric signals fed from the sensors 14 which are located in association with each of the pads P1 to P12 respectively. The detection signal output from the input detection circuit 16, is forwarded to the musical tone control circuit 17. The musical tone control circuit 17 generates a tone-generation control signal based on the input detection signal. Herein, the tone-generation control signal controls tone color, interval, sound duration, etc. The tone-generation control signal is fed to the sound source circuit 18A. The sound source circuit 18A generates a musical-tone-waveform signal representing a musical tone waveform based on the tone-generation control signal. The mixing circuit 19 receives the musical-tone-waveform signal (e.g., percussion sound signal) to generate an audio signal. The audio signal is amplified by the amplifier circuit 20 and is then supplied to the speakers 11. Thus, the speakers 11 produce musical tones (e.g., percussion sounds). By the way, an FDD control circuit 21 controls a floppy-disk drive storing a floppy disk on which is recorded musical tone signals. Thus, the FDD control circuit 21

supplies the musical tone signals reproduced from the floppy disk to a sound source circuit 18B which is provided independently of the sound source circuit 18A. Further, external musical tone signals reproduced from a compact disk or a cassette tape can be fed to an external input terminal 'IN'. The external musical tone signals are supplied to an external input circuit 22. The mixing circuit 19 is connected to the sound source circuits 18A, 18B as well as the external input circuit 22. Thus, the mixing circuit 19 performs mixing operations on musical tone waveforms which are represented by the percussion sound signals, musical tone signals reproduced from the floppy disk and external musical tone signals respectively. As a result of the mixing, the mixing circuit 19 generates mixed audio signals, based on which the speakers 11 produce mixed musical tones. Furthermore, an external output circuit 23 is connected to the mixing circuit 19 to provide the mixed musical tone signals via an external output terminal 'OUT'. Thus, the musical tone signals can be fed to other electronic devices.

The table-type electronic percussion instrument 1 is used by a number of persons who sit on chairs surrounding the main body 4. The persons strike the pads P1 to P12 with their hands or with sticks to play the electronic percussion instrument 1. Thus, the single instrument can be shared by a number of persons to enjoy playing music together. The present embodiment can be modified in such a way that the sound source circuit 18A is provided for each of the pads P1 to P12. In such a modification, the pads can be related to generation of drum sounds and cymbal sounds individually. Thus, by playing the single instrument with a number of persons, it is possible to play as an ensemble which simulates an actual ensemble playing with multiple instruments such as drums and cymbals. Thus, this invention can provide a brand-new type of the instrument which cannot be duplicated by conventional instruments. Because the speakers 11 are located beneath the main body 4, it is possible to generate each performance sound substantially at the location at which a person strikes a pad. In addition, vibrations from the performance sounds are transmitted to the main body 4 as well as the table board 2. Thus, the players can feel the vibrations.

As described above, the table board 2 is constructed with a base material 5 and a dressing board 6 which covers the surface of the base material 5, wherein the multiple holes 13 are formed through the base material 5, whilst the pads P1 to P12 are located on the surface of the dressing board 6 coinciding with the holes 13 respectively.

Sensors 14 are securely attached to the interior walls of the holes 13 to match with the backsides of the pads. Thus, the pads can be partitioned by the base material 5. In other words, there is less possibility that fatigue errors occur due to a striking force being imparted to parts of the table board 2 other than the pads. Thus, it is possible to minimize crosstalk between the sensors 14.

FIG. 6 is a cross-sectional view showing a partial construction of a table board 102 which is designed to be a modification of the aforementioned table board 2 shown in FIG. 3.

In the modification shown in FIG. 6, the table board 102 is basically constructed of a base material 105 and a dressing plate 106. Different from the aforementioned table board 2 of FIG. 3, the table board 102 of FIG. 6 is constructed in such a way that a dressing plate 106 is placed at the location of a pad PD only. The base material 105 is made of solid laminated lumber having high rigidity. A hole 113 is formed through the base material 105. The hole 113 consists of a lower-side opening and an upper-side opening having different diameters. The upper-side opening having a larger diameter is formed in proximity to the pad PD. The dressing plate 106 is made of wood whose grain is different from that of the base material 105. The dressing plate 106 is embedded in the base material 105 using a metal plate MP. An iron plate having a thickness of 1 mm or so is employed for the metal plate MP. A sensor 114 is attached to the lower face of the metal plate MP.

Thanks to the construction of the hole 113 which has two openings having different diameters, it is possible to easily vibrate the pad PD without damaging the strength of the base material 105 because the pad PD has a relatively large area which can be easily vibrated. In addition, the grain of the dressing plate 106 is different from the grain of the base material 105. This offers an easy visual distinction with respect to the location of the pad PD. In other words, in this embodiment it is not necessary to provide the pad PD with a specific visual display such as character(s), mark(s) and cloth. Further, the modification of FIG. 6 does not require the print technique used for the melanin dressing board because the dressing plate grain 106 is different from the base material grain 105. Furthermore, the modification employs the embedding of the dressing plate 106 in the hole 113. Thus, it is possible to design the dressing plate 106 such that people do not feel a difference which may be caused due to the difference

between the woods of the base material 105 and dressing plate 106.

Lastly, this invention is not limited to the aforementioned embodiment and modification. In the embodiment, the pad P is formed on the surface of the dressing board 6 and is struck by a hand or a stick. Instead of the pad, it is possible to provide a keyboard for an electronic keyboard instrument on the surface of the table board 2. Thus, it is possible to play an ensemble of an electronic percussion instrument and an electronic keyboard instrument.

The embodiment shows the table board 2 formed in a pentagon-like shape. The shape of the table board is not limited to such a pentagon-like shape. It is possible to employ other shapes such as round, elliptical and hexagonal.

As this invention may be embodied in several forms without departing from the spirit of the essential characteristics thereof, the present embodiment is therefore illustrative and not restrictive, the scope of the invention being defined by the appended claims rather than by the description preceding them, and all changes that fall within metes and bounds of the claims, or equivalence of such metes and bounds, are therefore intended to be embraced by the claims.

CLAIMS

1. A table-like electronic percussion instrument comprising:

a table-like main body formed by a table board and a plurality of supportive legs;

a plurality of pads on the surface of the table board;

a speaker located beneath the table board;

a sensor located beneath each pad, wherein each sensor can detect a striking force imparted to its pad so as to convert it to an electric signal; and

a musical tone generation circuit for generating musical tone signals based on electric signals fed from the sensors,

whereby the speaker generates electronic musical sounds based on the musical tone signals.

2. The instrument according to claim 1 wherein the table top is constructed of a base material and a dressing board, a plurality of holes are formed through the base material to coincide with the locations of the plurality of pads, the dressing board covering a surface of the base material, one of the plurality of sensors being securely fixed to a backside of the dressing board at the location of each of the holes.

3. The instrument according to claim 1 or 2 wherein the musical tone generation circuit is built into one of the plurality of legs supporting the table board.

4. The instrument according to any one of claims 1, 2 or 3 wherein the musical tone generation circuit provides a sound source for each of the plurality of sensors.

5. A table-like electronic percussion instrument comprising:

a table board shaped to enable a plurality of persons to sit at it, the table board being constructed of a base material whose surface is covered by a dressing board;

a plurality of holes formed in the base material;

a plurality of legs supporting the table board;

a plurality of pads on a surface of the dressing board in conformity with the plurality of holes respectively, the pads being arranged to enable striking;

a plurality of sensors, one located inside each of the plurality of holes and at a backside of the dressing board in respect to each of the plurality of pads, whereby each of the sensors can

detect a striking force imparted to each of their respective pads to generate an electric signal;

a musical tone generation circuit for generating a musical tone signal based on the electric signal sent from each of the sensors, wherein the musical tone generation circuit is placed in connection with a specific leg selected from among the plurality of legs; and

a speaker system located beneath the table board to generate a musical tone based on the musical tone signal.

6. The instrument according to claim 5 wherein the musical tone corresponds to a percussion sound which is either one of a drum sound or a cymbal sound.

7. The instrument according to claims 5 or 6 wherein the musical tone generation circuit contains a mixing circuit which is capable of mixing the musical tone signal which is generated in response to a striking force imparted to the pad and another musical tone signal supplied thereto, so that the mixing circuit generates mixed musical tone signals which enable the speaker system to generate the sounds of an ensemble.

8. The instrument according to any one of claims 5, 6 and 7 wherein the base material is made of a wood having a high rigidity whilst the dressing board is made of a wood whose rigidity is lower than that of the base material.

9. The instrument according to any one of claims 5, 6, 7 and 8 wherein the table board is constructed by a base material having a high rigidity, and a plurality of dressing plates are located on a surface of the base material to coincide with the locations of the pads, wherein each of the dressing plates is backed by a metal plate to which one of the sensors is securely attached.

10. The instrument according to any one of claims 5, 6, 7, 8 and 9 wherein the musical tone generation circuit is located beneath the table board and is supported by the specific leg which is selected from among the plurality of legs.

11. The instrument according to any one of claims 5, 6, 7, 8, 9 and 10 wherein said instrument simultaneously accommodates multiple persons for sharing said instrument.

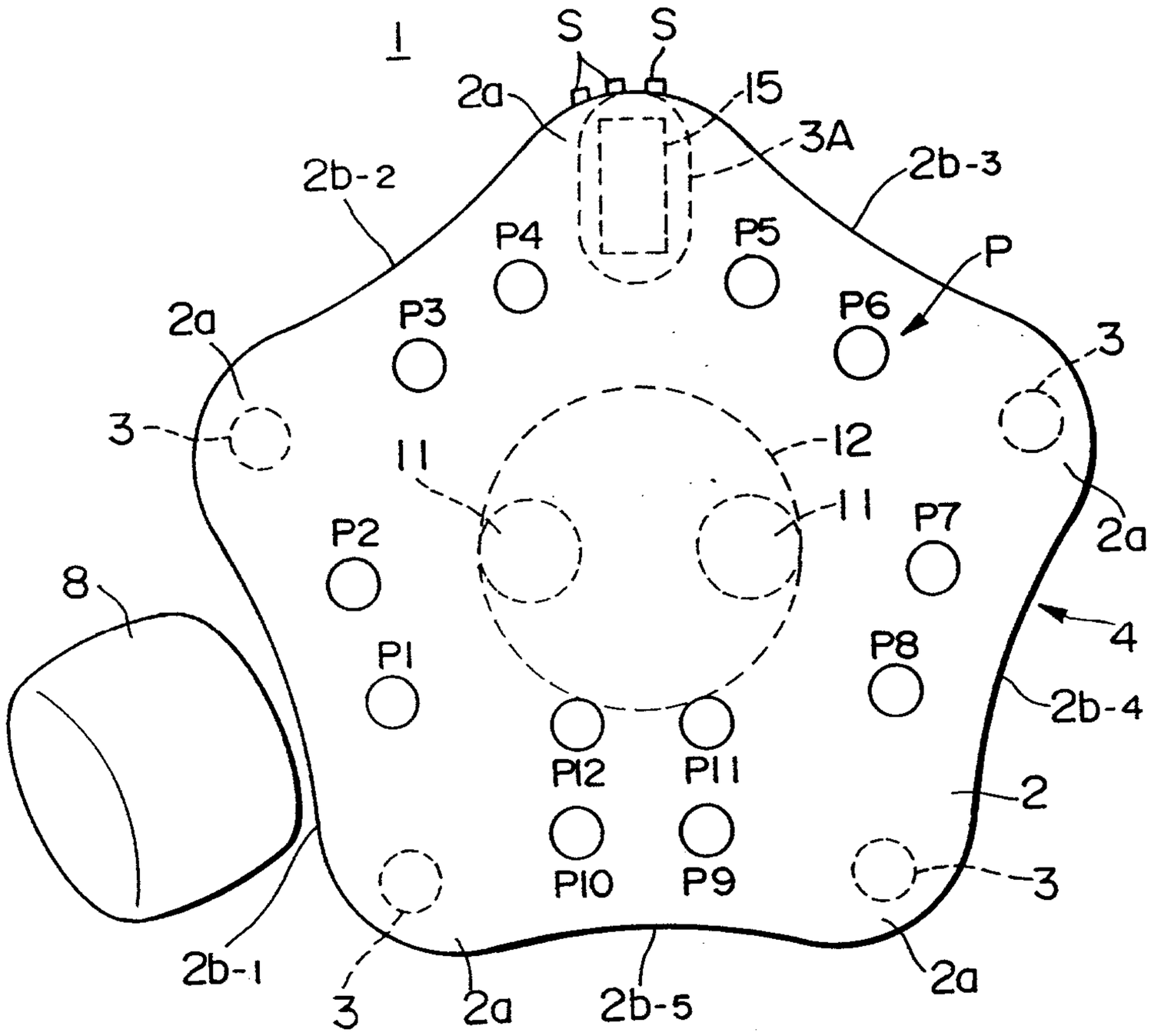

FIG.1

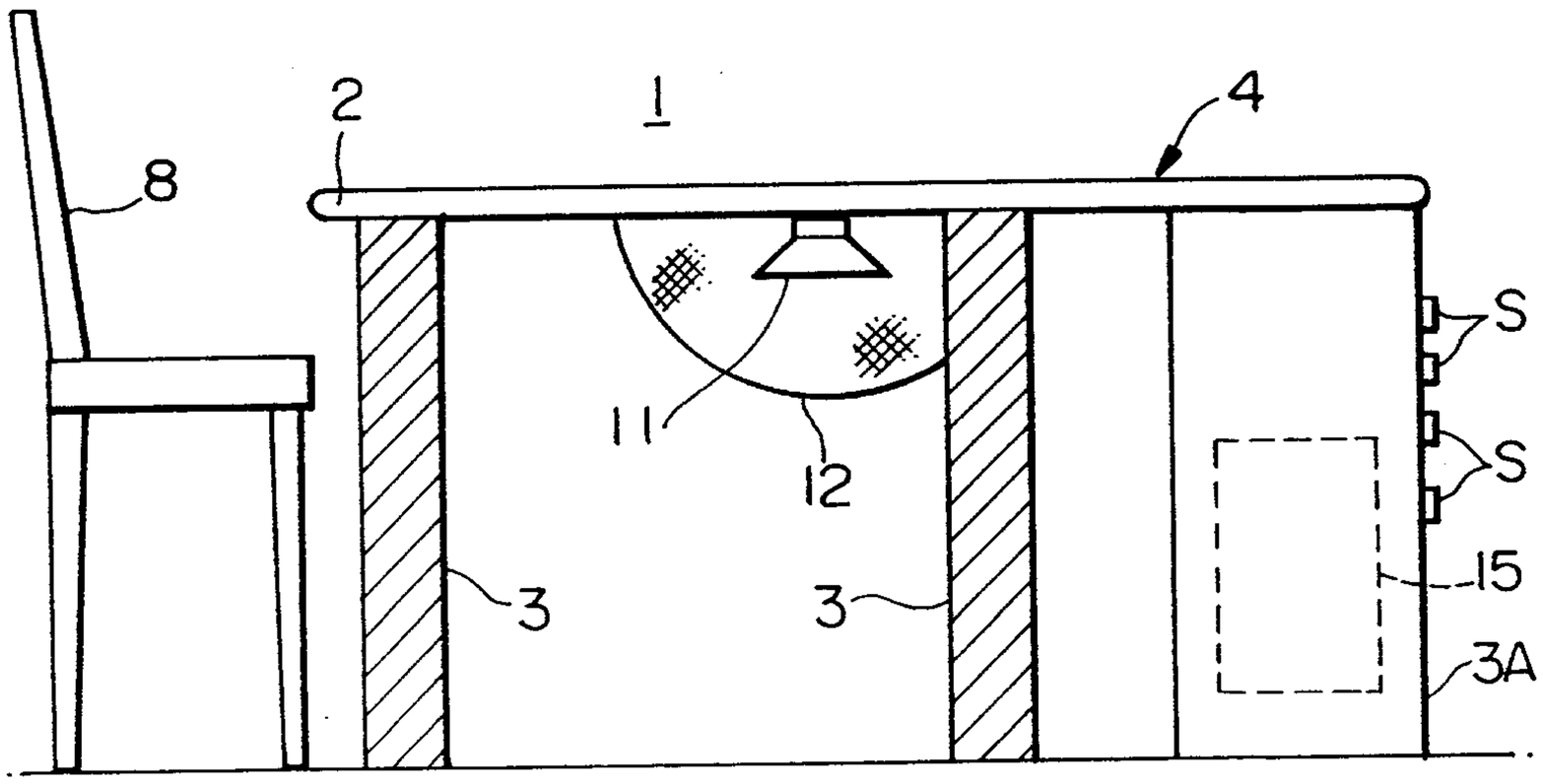

FIG.2

Scott & Aylen

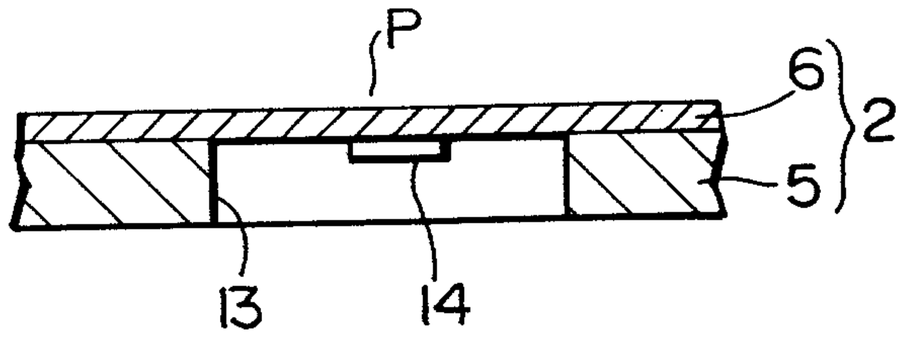

FIG.3

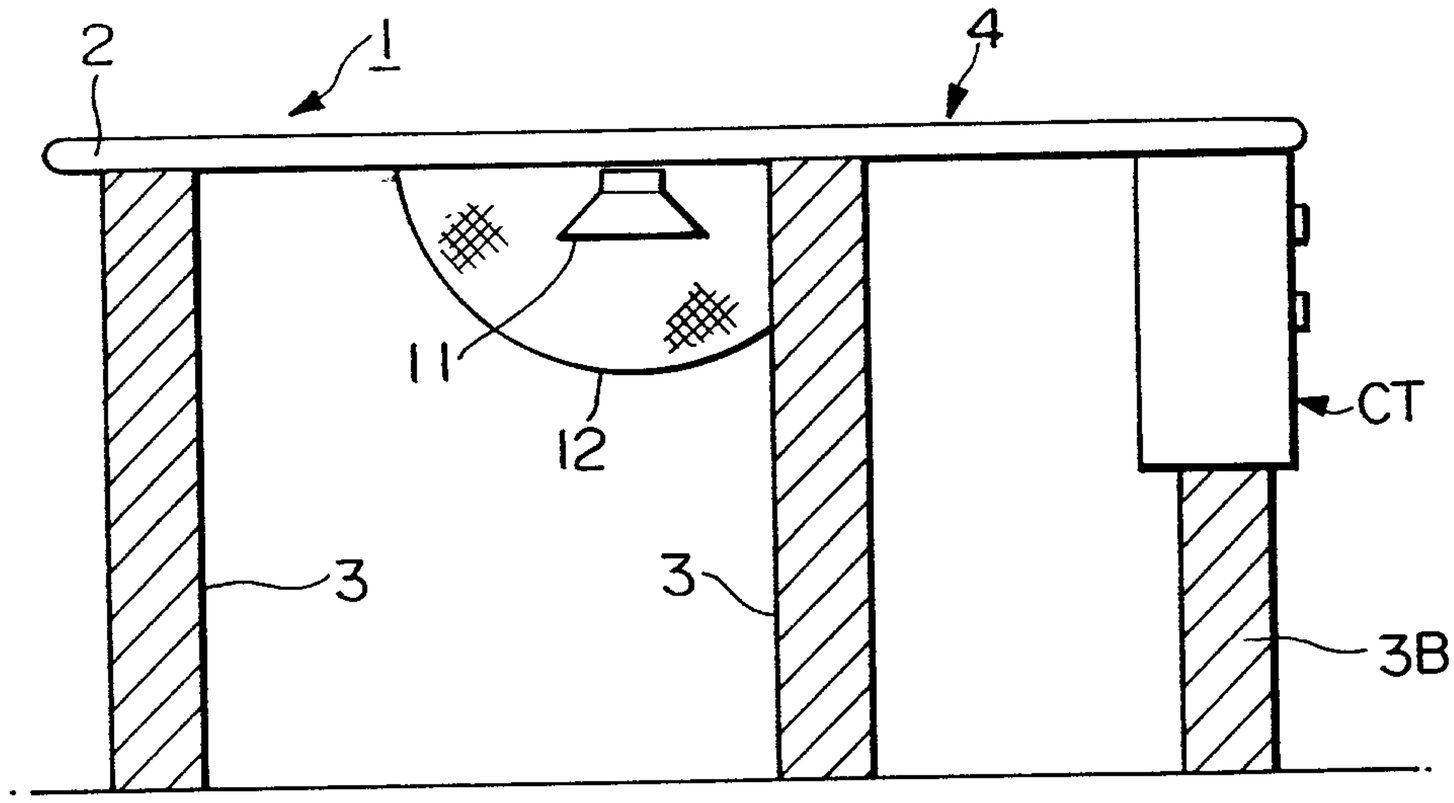

FIG.4

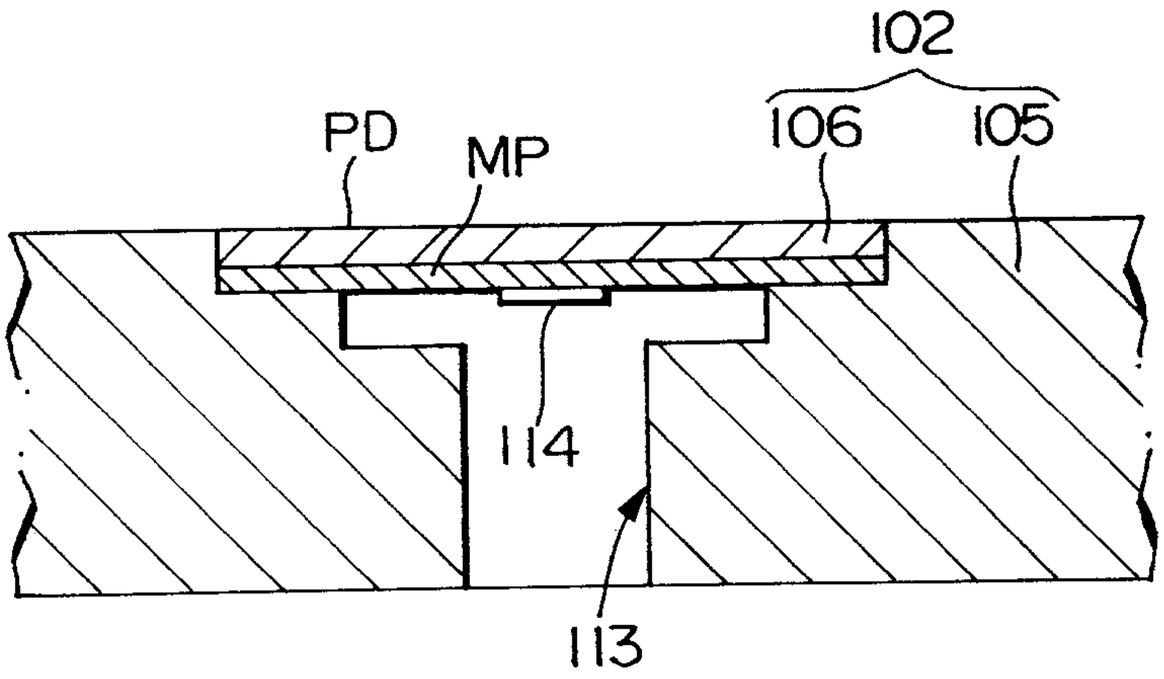

FIG.6

Scott & Aylen

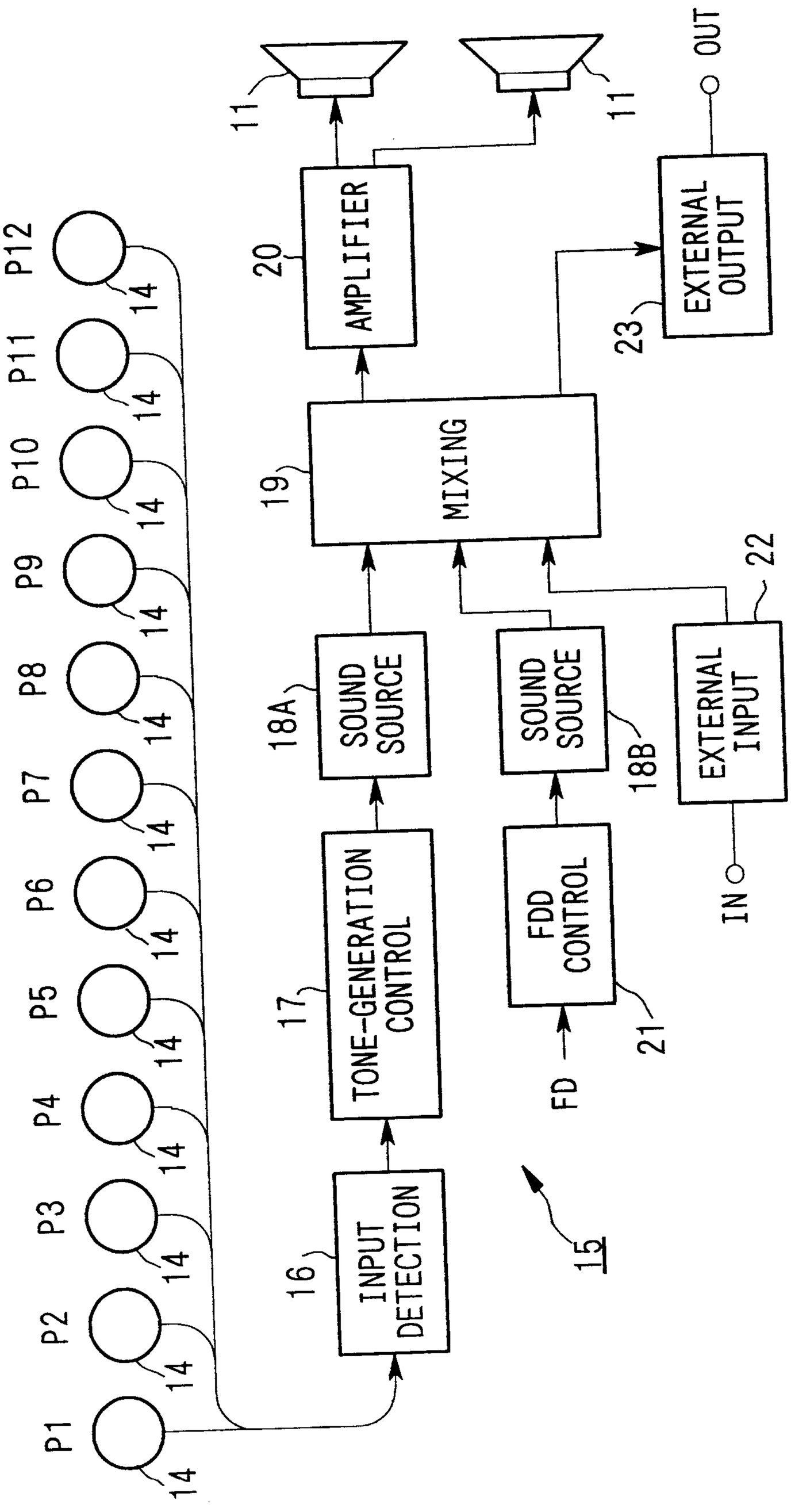

FIG.5

Scott & Aylen

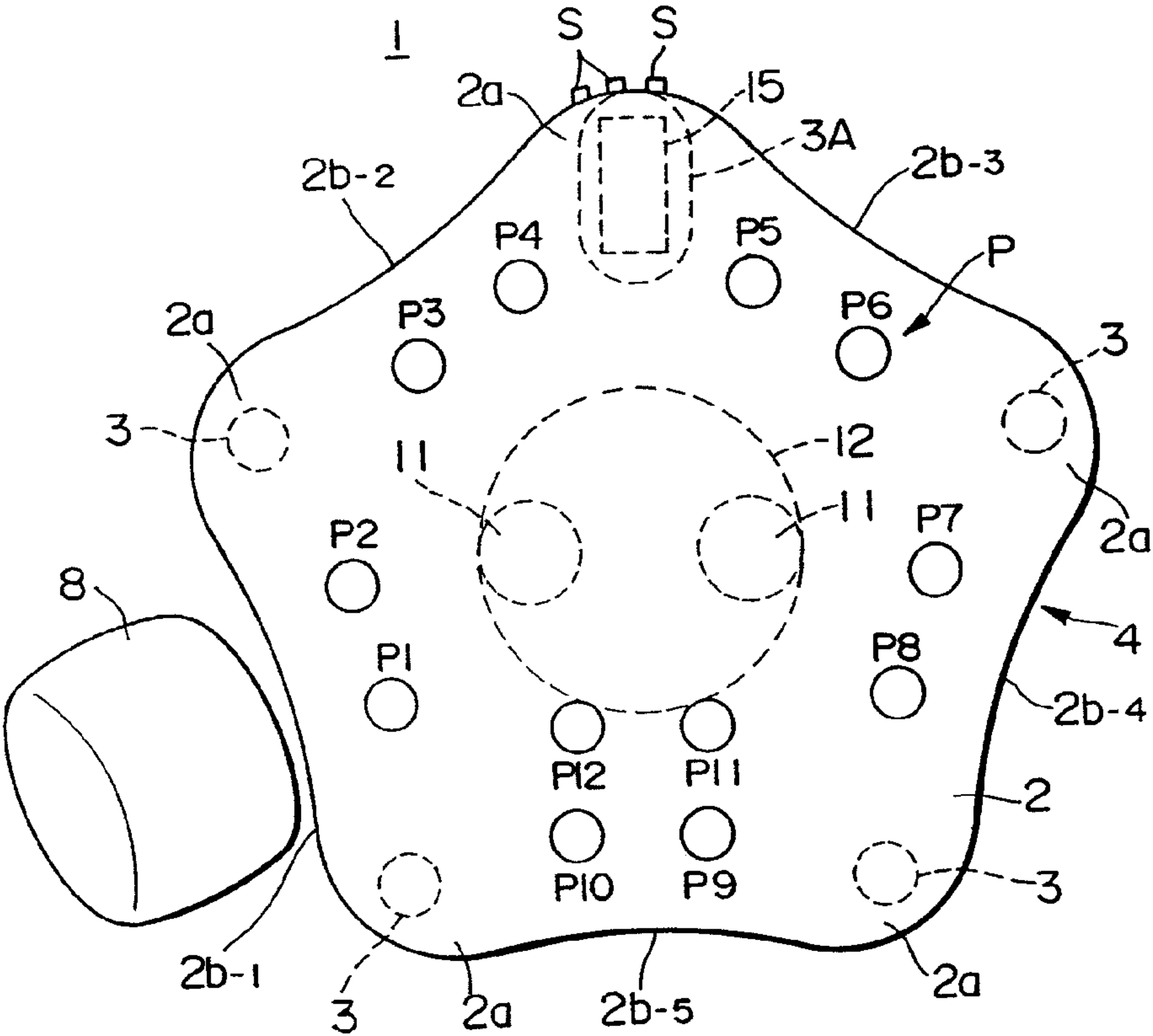
1
S
S
2a
15
3A
2b-2
2b-3
P4
P5
P
P3
P6
2a
3
3
12
11
11
P2
P7
2a
8
4
P1
P8
2b-4
P12
P11
2
P10
P9
3
2b-1
3
2a
2b-5
2a