T. WARRICK.

KELP DRIER.

APPLICATION FILED SEPT. 24, 1917.

1,262,416. Patented Apr. 9, 1918.

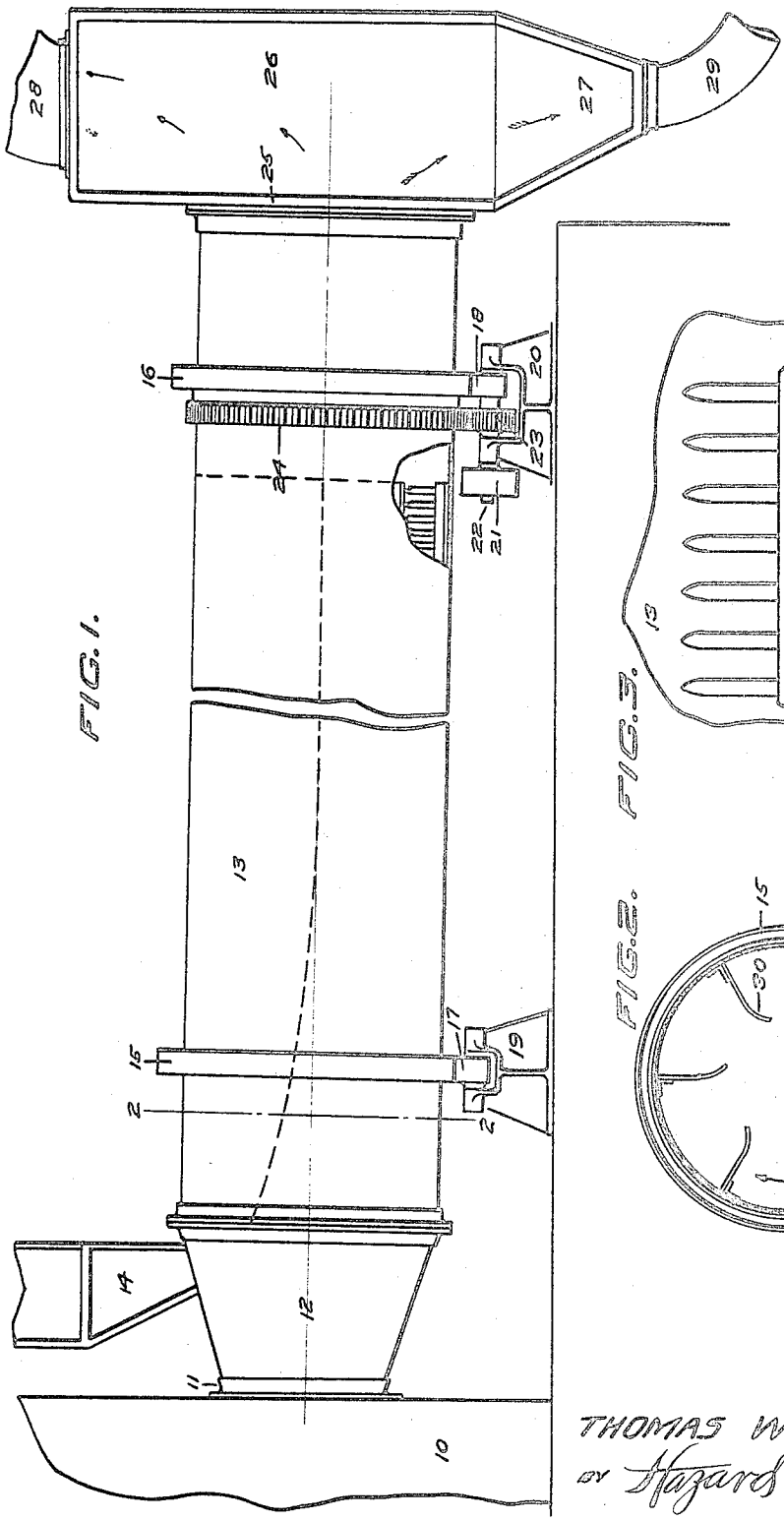

FIG. 1.

FIG. 3.

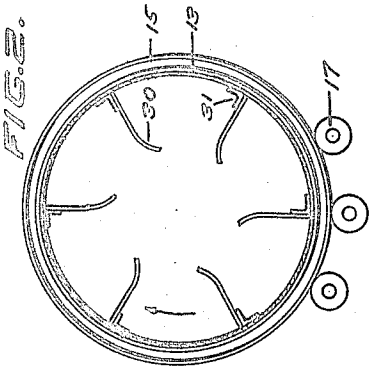

FIG. 2.

INVENTOR

THOMAS WARRICK

BY Hazard and Miller

ATTYS

UNITED STATES PATENT OFFICE.

THOMAS WARRICK, OF LONG BEACH, CALIFORNIA.

KELP-DRIER.

1,262,416. Specification of Letters Patent. Patented Apr. 9, 1918.

Application filed September 24, 1917. Serial No. 192,919.

To all whom it may concern:

Be it known that I, THOMAS WARRICK, a citizen of the United States, residing at Long Beach, in the county of Los Angeles and State of California, have invented new and useful Improvements in Kelp-Driers, of which the following is a specification.

This invention relates to kelp treating machinery and particularly pertains to a drier therefor.

The principal object of this invention is to provide a machine through which raw kelp may be continuously fed and within which it may be readily dried preliminary to the incineration thereof.

Another object of this invention is to provide a device of the above character which is simple and compact in its construction and may be readily filled and cleaned.

Other objects will appear hereinafter.

The invention is illustrated, by way of example, in the accompanying drawings in which:

Figure 1 is a view in section and elevation illustrating the kelp drier and its connection with a furnace and ash recovery system.

Fig. 2 is a view in transverse section on the line 2—2 of Fig. 1 disclosing the radial arrangement of the agitating fingers within the drum of the machine.

Fig. 3 is a view in section and elevation illustrating a fragmentary portion of the drum of the machine and the agitating fingers mounted therein.

Referring more particularly to the drawings, 10 indicates a furnace of any desired construction having a flue opening 11 through the wall thereof. This opening is surrounded by a frusto-conical thimble 12, the enlarged mouth of which is disposed vertically and abuts against the opened end of a kelp drying drum 13. The thimble 12 is fixed and is therefore fitted with a feed hopper 14 through which raw kelp may be delivered to the drum. As shown in the drawings, the contiguous edges of the thimble and drum are made with flanges which substantially close the gap between them and allow the raw kelp to easily move into the drum 13. This drum is of a uniform diameter throughout its length and has been found preferable to be of a diameter of approximately seven feet, and a length of forty to fifty feet. When constructed according to these dimensions it is mounted to have a horizontal fall of approximately two inches to its length.

The opposite ends of the drum are formed with annular tires 15 and 16 which are supported upon trunnion rollers 17 and 18. The rollers 17 are mounted within bearings 19, and the rollers 18 are mounted within bearings 20. The two sets of rollers 17 and 18 are arranged to conform to the circumference of the two tires and support them during the rotation of the drum. One of the rollers 18 is driven by a pulley 21 connected with a suitable source of power and mounted upon a roller shaft 22. A driving pinion 23 is secured to this shaft and is in mesh with a ring gear 24 mounted around the drum. In this manner a driving motion is imparted to the drum through the pulley.

The opposite opened end of the drum is in communication with a flue opening 25 formed through one wall of a flue 26. This flue embodies an air passage-way and a hopper 27. The passage-way extends upwardly to a draft conduit 28 which is suitably connected with a suction fan (not shown in the drawings). The hopper extends downwardly and has downwardly converging walls in connection with a kelp outlet pipe 29, through which the dried material is carried off.

Mounted within the drum for the purpose of agitating and feeding the kelp therethrough are sets of agitating fingers 30 which are arranged parallel to each other and radially of the drum substantially throughout its length. These rows of fingers are secured to angle strips 31 which are in turn fastened to the inner wall of the drum and bent in the shape shown in Fig. 1. By mounting the fingers upon strips so disposed, they will be arranged along a slight helix at the front end of the drum and will thereafter extend in rows parallel to the center of the drum, the rows terminating a distance of approximately seven feet from the end when the machine is built according to the dimensions hereinbefore specified. As particularly shown in Fig. 2, the fingers are formed with slightly hooked ends by which the kelp is engaged and thoroughly agitated.

In operation, raw kelp is thrown into the hopper 14 from which point it will gravitate through the flue thimble 12 and into the forward end of the drum 13. When in

the drum, it will be engaged by the fingers 30 which, due to their helical arrangement, will simultaneously agitate it and advance it along the drum. During this action the products of combustion from the furnace are passing through the drum in the same direction as the travel of the kelp. In this manner the draft from the furnace will aid in feeding the kelp through the machine. As the kelp progresses along the drum it will be relieved of its moisture and will crumble into pieces which will gradually move along the lower part of the drum and will be ejected into the flue 26. Attention is directed to the fact that the kelp is not reduced to ash, but merely dried and still possesses enough weight to cause it to gravitate into the hopper 27 within the flue and not be carried upwardly with the draft through the draft conduit 28 with the moisture which has escaped from the kelp. By this method the kelp may be efficiently freed of moisture, it having been proven that approximately ninety-four per cent of the moisture is removed, while most other machines have only been capable of removing eighty-five per cent. of the moisture.

It will thus be seen that the apparatus here disclosed is simple in its construction and operation and will act efficiently and rapidly to dry kelp, or other vegetable matter.

While I have shown the preferred construction of my kelp drier as now known to me, it will be understood that various changes in the combination, construction and arrangement of parts may be made by those skilled in the art without departing from the spirit of my invention as claimed.

I claim:

In a kelp drier, a cylindrical drum, angle irons fixed longitudinally against the inner face of the drum, and fingers fixed to the angle irons and projecting radially inwardly; the inner ends of the fingers being curved in the direction of rotation.

In testimony whereof I have signed my name to this specification.

THOMAS WARRICK.