S. R. DAWSON.

FORCE-PUMPS.

No. 193,754. Patented July 31, 1877.

Fig. 1.

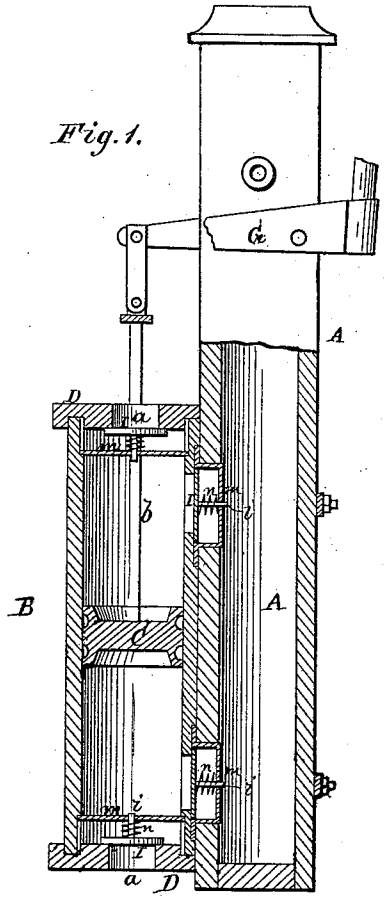

Fig. 2.

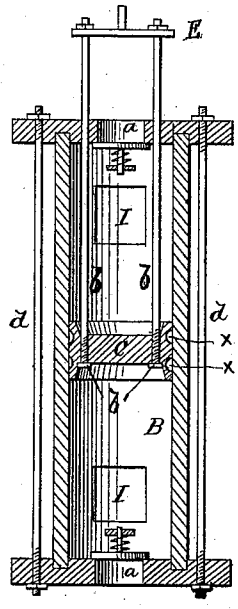

Fig. 3.

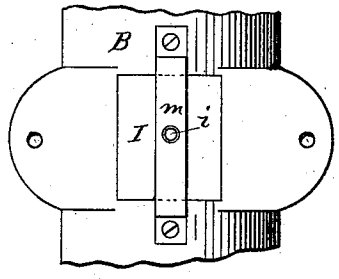

Fig. 4.

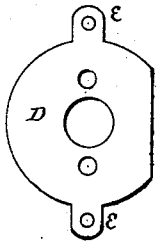

WITNESSES

Henry N. Miller

Frank Galt

INVENTOR

Sam'l R. Dawson

Alexander Dawson

ATTORNEYS

N. PETERS, PHOTO-LITHOGRAPHER, WASHINGTON, D. C.

UNITED STATES PATENT OFFICE.

SAMUEL R. DAWSON, OF COUNCIL BLUFFS, IOWA.

IMPROVEMENT IN FORCE-PUMPS.

Specification forming part of Letters Patent No. **193,754**, dated July 31, 1877; application filed June 13, 1877.

To all whom it may concern:

Be it known that I, SAMUEL R. DAWSON, of Council Bluffs, in the county of Pottawattamie, and in the State of Iowa, have invented certain new and useful Improvements in Force-Pumps; and do hereby declare that the following is a full, clear, and exact description thereof, reference being had to the accompanying drawings, and to the letters of reference marked thereon, making a part of this specification.

The nature of my invention consists in the construction and arrangement of a force-pump, as will be hereinafter more fully set forth.

In order to enable others skilled in the art to which my invention appertains to make and use the same, I will now proceed to describe its construction and operation, referring to the annexed drawings, in which—

Figure 1 is a vertical section through the pump stock and cylinder. Fig. 2 is a section of the pump-cylinder only. Figs. 3 and 4 show the construction of the valves.

A represents the pump-stock, and B the cylinder, which is of any suitable dimensions, and bored out to receive the plunger C.

The cylinder B is provided with a cap or head, D, at each end, having a central aperture, *a*, for the admittance of the water into the cylinder. In the top cap or head are two other small holes, one on each side of the central opening *a*, to allow the plunger-rods *b b* to pass through.

The lower ends of these rods are secured in the plunger C by passing through the same, and fastened by nuts *b'*, and at the upper ends said rods are connected by a cross-bar, E, as shown, and this bar connected to the operating-lever G.

The plunger-rods *b b*, passing through the top cap or head, are guided by the same, and two rods being used, they constitute braces to cause the plunger to work easy in any position of the cylinder, whether it is set plumb or not.

The caps or heads D are secured in place by means of rods *d d* passing through lugs *e* on their sides, and fastened by nuts.

The plunger C is of any suitable dimensions, and has two or more exterior circumferential grooves, *x*, so as to make a water-packing.

In each cap or head of the cylinder is a valve, I, and two similar valves in the side of the cylinder, one at each end. These valves are all made of metal, square or round, according to position, and each valve is held in place by a spiral spring, *n*.

There is a spring brace or bar, *m*, over each side valve, secured to the cylinder by a screw at each end of the brace.

From the valve projects a pin, *i*, which passes through a hole in the spring brace or arm *m*, and is surrounded by a spiral spring, *n*, to hold the valve in place and keep it closed.

The end valves of the cylinder work the same as the side valves; but the braces *m* in that case are secured by being let into slots or grooves on the inside of the cylinder.

The cylinder is held to the pump-stock by means of clamps, as shown, or by any other suitable means.

Having thus fully described my invention, what I claim as new, and desire to secure by Letters Patent, is—

In a pump, the combination, with the cylinder B, having top and bottom caps D, with apertures *a* and the braces *m*, the plunger C, the two plunger-rods *b b*, passing through the cap, and the top connecting-bar E, the spring-valves I, and the pump-stock A, all substantially as and for the purposes herein set forth.

In testimony that I claim the foregoing I have hereunto set my hand this 30th day of April, 1877.

SAMUEL R. DAWSON.

Witnesses:
O. L. FRENCH,
J. D. EDMUNDSON.