Sept. 27, 1949. M. C. RICHARDSON 2,483,351

SAFE INCANDESCENT LAMP

Filed June 2, 1949

FIG. 1.

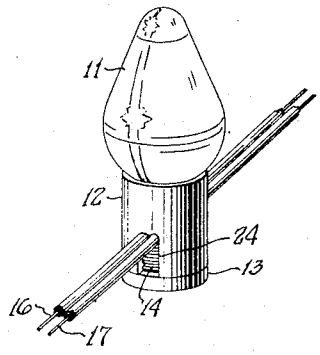

FIG. 6.

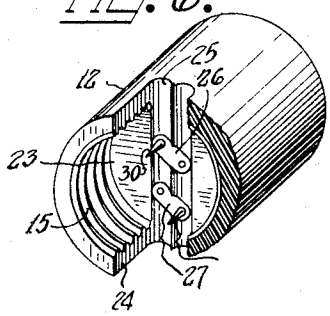

FIG. 3.

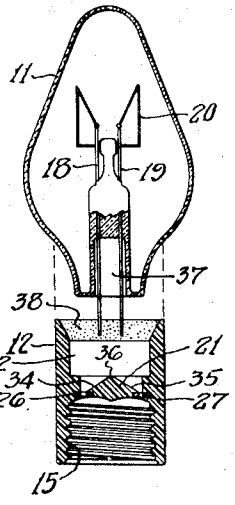

FIG. 8.

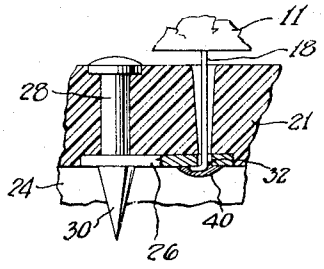

FIG. 4.

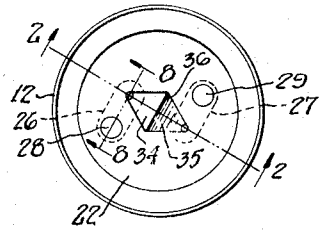

FIG. 2.

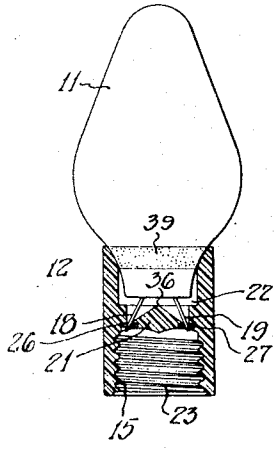

FIG. 5.

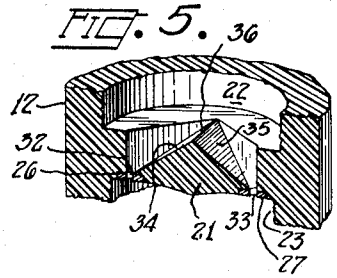

FIG. 7.

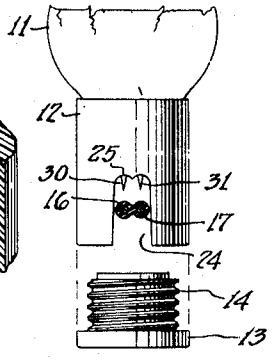

INVENTOR
MAX C. RICHARDSON

BY E. D. Richenbrand

ATTORNEY

Patented Sept. 27, 1949

2,483,351

UNITED STATES PATENT OFFICE

2,483,351

SAFE INCANDESCENT LAMP

Max C. Richardson, Portland, Oreg.

Application June 2, 1949, Serial No. 96,705

4 Claims. (Cl. 176—32)

1

This invention relates generally to electric illuminating lamps of the type having an incandescent filament enclosed in a hermetically sealed glass envelop and more particularly to the type of incandescent electric lamps used for temporary decorative service such as Christmas tree lamps and the like.

Usually, in the prior art, these lamps are smaller than lamps used for general illumination and are finished with a "miniature" size "Edison" screw base having a brass threaded shell adapted to be screwed into the usual brass threaded interior shell of an "Edison base" socket.

The "Edison base" lamp and socket have not been satisfactory for the reason that the open "Edison" type socket is a hazard to the user and also for the reason that the "Edison base" lamp and socket connection is difficult to maintain in a "weatherproof" condition in outdoor installation.

In this regard it should be noted that the electric code authorities only consider an Edison base socket installation safe when the installation is polarized so that the brass screw shell of the socket is maintained at ground potential. While this can be done on permanently wired socket installations, it is not possible on plug-in cord installations of the usual Christmas decoration type. Because nothing better has been available, the code authorities have allowed the use of "Edison base" portable or temporary decorative lighting installations but only against their better judgment.

It is a principal object of this invention to provide an incandescent electric lamp of the Christmas decoration type which will be inherently weatherproof and safe and which can be installed without hazard by the most inexperienced user.

To accomplish the above principal object it is a second object of this invention to provide an incandescent type electric lamp with a permanent base which can be directly attached to an insulated parallel pair of electric wires without first having to provide a socket on the wires for the reception of the lamp.

To accomplish this second object it has been found convenient to use the general idea of socket to wire attachment shown in the prior art, U. S. Patent No. 1,315,317, issued September 9, 1919, to S. Letiecq on a "Device for joining electrical conductors."

A third object of this invention is to provide a base to be permanently affixed to the glass envelop of an incandescent lamp which base has been designed in such a way as to be adapted to machine assembly of the lamp and base.

2

How these and other objects are attained is explained in the following description of the invention which refers to the attached drawing, in which,

Fig. 1 is a perspective view of the lamp of this invention assembled on to an electric service cord.

Fig. 2 is an elevation of the lamp of this invention showing the base of the lamp in section, taken along the line 2—2 of Fig. 4.

Fig. 3 is a vertical section of the lamp of this invention with the base separated from the glass envelop but in position to be assembled thereto, taken along the line 2—2 of Fig. 4.

Fig. 4 is a top plan view of the base of the lamp of this invention.

Fig. 5 is a fragmentary perspective view in partial vertical section of the top of the lamp base shown in Fig. 4.

Fig. 6 is a broken away perspective view of the bottom of the lamp base of this invention showing the means for making the lamp both mechanically and electrically secure on the electric service cord.

Fig. 7 is an elevation of the lamp of this invention with the electric service cord in place ready to be secured in place by the base plug.

Fig. 8 is a vertical section through the lamp base along the line 8—8 of Fig. 4.

Referring now to the drawing the lamp of this invention is shown as having a glass envelop 11, insulating a base 12 and an insulating base plug 13 having threads 14 adapted to engage with internal threads 15 to secure electric wires 16 and 17 in place assembled with the base as shown in Fig. 1.

Envelope 11 has lead-in wires 18 and 19 sealed therein and enclosed filament 20 fixed at its ends to lead-in wires 18 and 19 as shown in Fig. 3.

Base 12 is generally cylindrical in shape with a transverse internal barrier 21 about midway its ends thus forming a receptacle 22 for the glass envelop at its upper end and a receptacle 23 for base plug 13 at its lower end. The lower shell of receptacle 23 of base 12 is cut away diametrically to form wire receiving groove 24 terminating at its top in a surface 25 formed both in the outer shell and in the under side of barrier 21 to conform to the surface shape of the pair of service wires 16, 17.

Recessed into the under side of barrier 21 are conducting links 26 and 27 secured in place as shown by conducting rivets 28 and 29 having downwardly extending points 30 and 31 respectively.

At their opposite ends from rivets 28, 29, links 26, 27 are perforated with lead wire receiving holes 32 and 33 respectively.

Formed into the upper surface of barrier 21 are two downwardly diverging ramps 34 and 35 meeting at their upper ends in diametral ridge 36 longer than the diameter of the recessed opening 37 in glass envelope 11. Ramps 34 and 35 each laterally converge downwardly to the under side of barrier 21 to form holes in barrier 21 at the respective locations of holes 32—33 in links 26—27. As shown in Fig. 8, the holes in the lower surface of barrier 21 are of smaller diameter than that of holes 32—33 in links 26—27.

In assembling base 12 to glass envelope 11, the parts are held in the relative positions shown in Fig. 3 after a proper cement has been applied to one or both parts as at 38 in Fig. 3 and at 39 in Fig. 2. As the envelope 11 of Fig. 3 is brought progressively closer to base 12, lead-in wires 18 and 19 will strike ramps 34 and 35 respectively and thereby will be guided to the positions shown in Fig. 2 where the ends of wires 18 and 19 have come to their final positions in holes 32 and 34 of links 26 and 27, after which the wire ends are soldered to the links as shown in Fig. 8 where the solder is indicated at 40.

To attach the finished lamp to the electric service cord, groove 24 in base 12 is straddled over cord 11—12 as shown in Fig. 7 and plug 13 is screwed into base 12 to the final position shown in Fig. 1.

Having thus explained the construction of the parts and the assembly of the completed lamp of this invention and also having shown its method of attachment to an electric cord for proper use, I claim:

1. An electric lamp of the incandescent filament type comprising a lamp bulb, an insulating base permanently secured thereto and a cap for said base, said bulb comprising a glass envelope enclosing a filament wire having terminal wires sealed in said envelope and extending to the outside thereof, said base having a channel formed transversely therethrough for receiving a pair of insulated wires, said base having pointed terminals for said terminal wires secured therein, each of said terminals being connected to only one of said terminal wires, said pointed ends of said terminals extending into said channel, said cap and said base including means co-operable to mechanically secure said insulated wires in said channel and to electrically connect said terminals to said insulated wires by forcing said points of said pointed terminals through the insulation of said insulated wires.

2. A weatherproof electric lamp of the incandescent filament type comprising a glass envelope enclosing a filament with terminal wires leading therefrom to the outside of said envelope together with a permanently attached insulating base with sharply pointed terminals for said terminal wires secured therein and means for mechanically securing said base to a pair of insulated electric wires and for electrically connecting said pointed terminals to said wires.

3. A lamp base adapted to be permanently fixed to the glass envelope of an incandescent electric lamp, said glass envelope having lead-in wires sealed therein and protruding therefrom, said base having a recess at one end for receiving one end of said envelope, said base having a transverse channel at its other end for receiving a pair of insulated wires intermediate the ends of said wires, said base having terminals for said lead-in wires fixed thereto intermediate said recess and said channel, means formed in said base to guide each of said lead-in wires to its respective terminal, said terminals having pointed ends projecting into said channels.

4. A pair of insulated electric wires, an incandescent electric lamp having an insulating base permanently fixed thereto, a cap for said base, and co-operating means in said base and said cap for mechanically securing said lamp to said wires intermediate the ends of said wires and for electrically connecting said lamp to said wires.

MAX C. RICHARDSON.

No references cited.