May 12, 1942. S. M. UDALE 2,283,021

PRESSURE CARBURETOR

Filed June 24, 1940 3 Sheets-Sheet 1

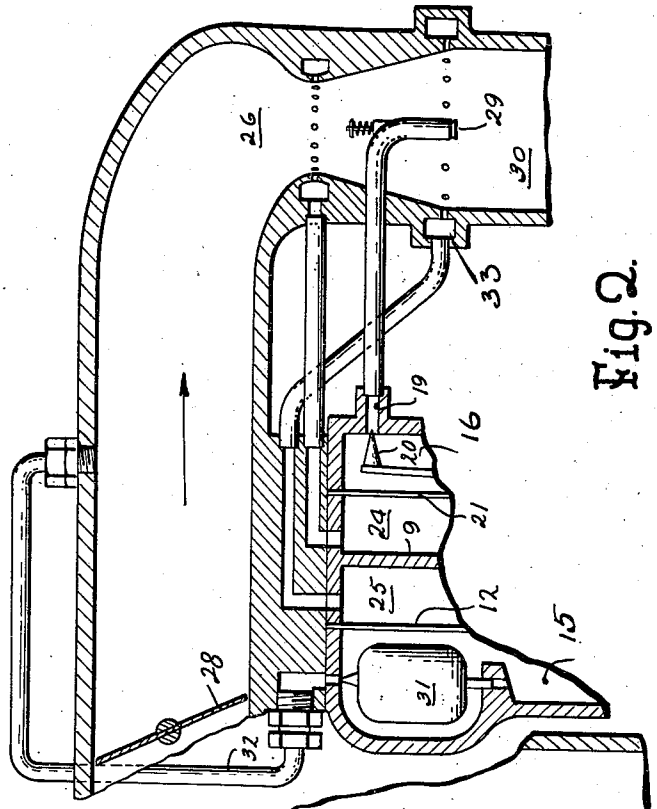

Fig. 2.

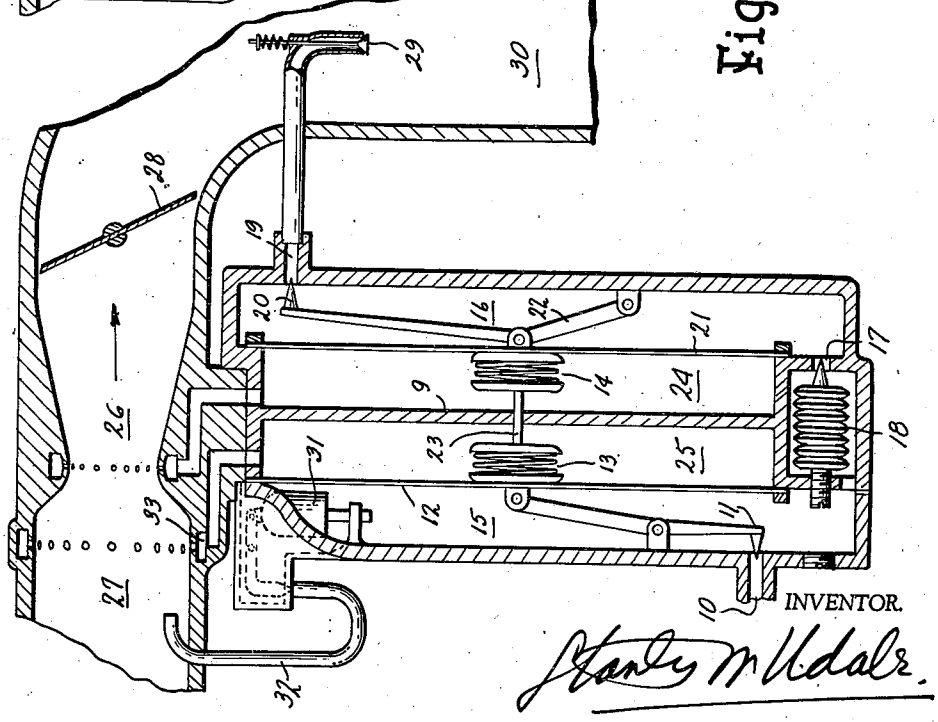

Fig. 1.

INVENTOR.

Stanley M. Udale

May 12, 1942. S. M. UDALE 2,283,021

PRESSURE CARBURETOR

Filed June 24, 1940 3 Sheets-Sheet 2

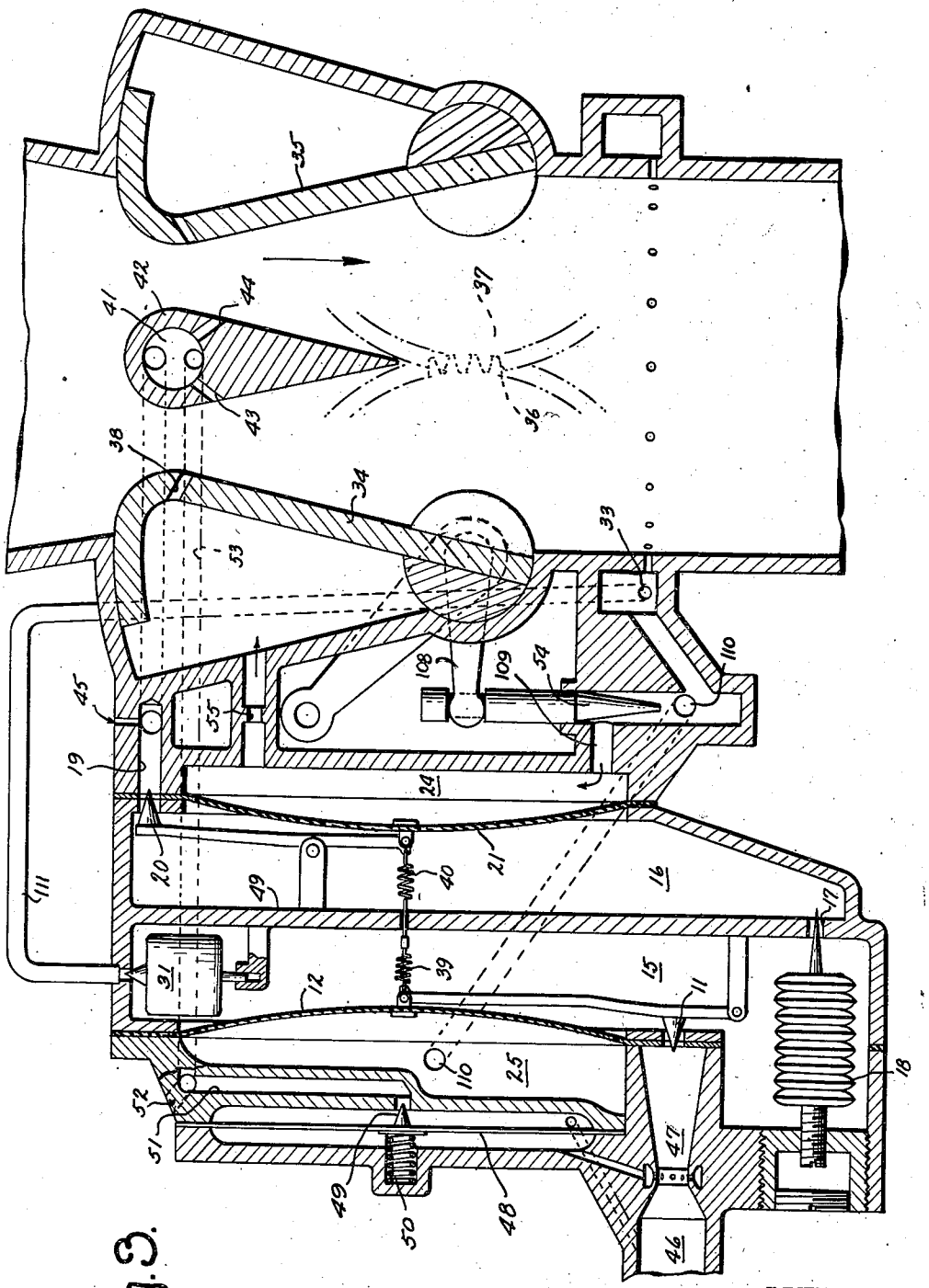

Fig. 3.

INVENTOR.

Stanley M. Udale

May 12, 1942. S. M. UDALE 2,283,021

PRESSURE CARBURETOR

Filed June 24, 1940 3 Sheets-Sheet 3

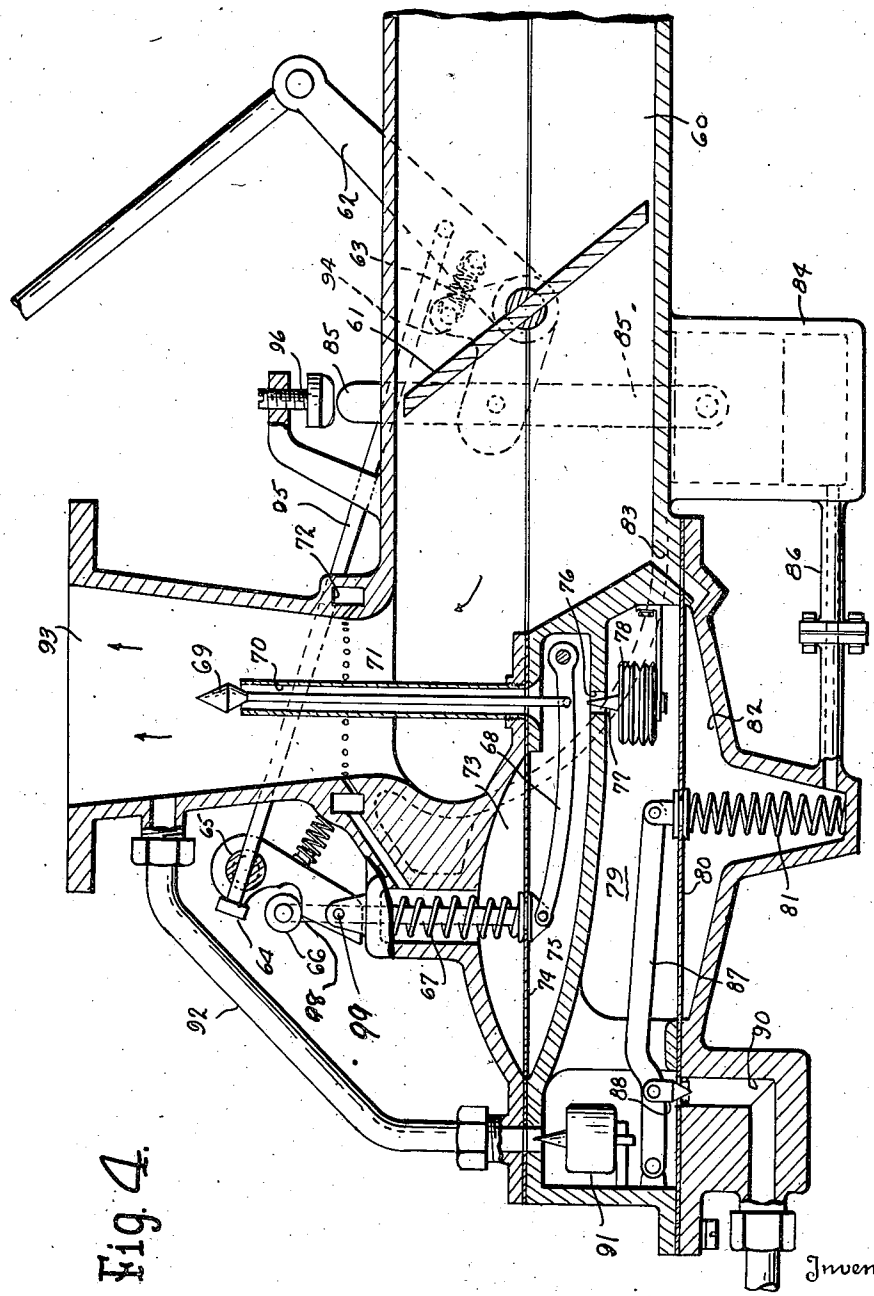

Fig. 4.

Inventor

Stanley M Udale

Patented May 12, 1942

2,283,021

UNITED STATES PATENT OFFICE

2,283,021

PRESSURE CARBURETOR

Stanley M. Udale, Detroit, Mich., assignor to George M. Holley and Earl Holley

Application June 24, 1940, Serial No. 342,095

1 Claim. (Cl. 261—69)

The object of this invention is to improve the fuel mixing device illustrated in the Peltz Patent 1,665,145. In that device the pressure difference between that in the air entrance to the carburetor and the pressure in the venturi throat, also located in the air entrance, is used to control the fuel flow across a fixed orifice and to thereby maintain a fixed fuel air ratio. The fuel is delivered on the downstream side of the throttle. This feature of delivering fuel on the engine side of the throttle is, of course, of paramount importance today in aircraft, as all attempts to deliver fuel on the atmospheric side of the throttle as in ordinary automobile type carburetors, have resulted in disastrous crashes, due to freezing not only on the throttle, but in the air passage immediately adjacent to and on the engine side of the throttle valve.

In the airplane it is also necessary to provide some means for correcting for extreme changes in air density. Furthermore, it is desirable to modify and adapt the Peltz principle to the ordinary airplane carburetors now in general use.

In the drawings:

Figure 1 shows the application of the Peltz principle to an airplane carburetor having an altitude correcting device.

Figure 2 is a modification of the Peltz device in which the venturi is placed on the engine side of the throttle valve.

Figure 3 shows the application of the Peltz principle to a well known variable venturi carburetor which has come into general use in the air.

Figure 4 shows the application of the principle to an updraft carburetor with an anterior throttle.

In Figure 1, 10 is the fuel entrance; 11 is the needle valve controlled by the diaphragm 12; 13 and 14 are the compression springs which maintain a definite pressure on the diaphragm 12 and therefore maintain a definite pressure in the fuel entrance chamber 15; 16 is the fuel outlet chamber which communicates with the fuel entrance chamber through a restricted orifice 17 controlled by the barometric device 18, which automatically restricts the fuel flow at high altitudes. The chamber 16 has a fuel outlet 19 controlled by a valve 20 which is controlled by the diaphragm 21 through a link 22. Obviously the flow past 18 and through the orifice 17 is determined by the pressure difference between the chamber 15 and the chamber 16.

The compression springs 13 and 14 press against each other through the rod 23 which slides freely through the partition 9 which forms a wall for the air chambers 24 and 25. In order to create a flow there must be a pressure difference between the air chamber 24 containing the spring 14 and the air chamber 25 containing the spring 13. Therefore, the chamber 24 is put in communication with the throat 26 and the chamber 25 with the air entrance 27, that is, with the piezometer ring 33 located in the main air entrance. The flow through 26 is controlled by the throttle 28. After the air passes the throttle 28, it passes the fuel outlet 29 which is spring loaded in order to provide a small amount of spraying in the air passage 30 which leads to the supercharger of the airplane engine. The float 31 is located in the upper portion of the chamber 15 and permits vapor to escape from this chamber through the pipe 32 which can discharge into the air entrance, or can be returned to the fuel pump.

In Figure 2 the throttle 28 is located in the air entrance and the throat of the venturi 26 is connected as before with the chamber 24. The chamber 25 now communicates with the piezometer ring 33 located on the engine side of the throttle 28 and of the venturi 26 and far enough away from the throttle 28 so that the disturbances created by the throttle have died down, so that a true reading can be obtained and so that the pressure difference between that in the piezometer ring 33 and the pressure in the throat of the venturi 26 truthfully reflects the air flow and accurately determines fuel flow.

As before the fuel discharges through a spring loaded valve 29 into the mixture entrance 30 leading to the supercharger (not shown), and as before the float valve 31 in the upper portion of the chamber 15 allows any vapor in that chamber to escape through a passage 32 which communicates with the air entrance. The advantage of the structure shown in Figure 2 over that of the structure shown in Figure 1 is that when the device meters in response to the flow of low density air, then the pressure difference is created by low density air, so that for a given weight of air flow the pressure difference created is much greater than with high density air. The reason is that if the density is one-half and the velocity of flow double, then the velocity effect will be doubled.

In Figure 3 a variable venturi is shown corresponding to a carburetor in general use, so that a few necessary modifications must be introduced. The variable Venturi throttles 34 and 35 are connected together by gears 36 and 37 shown in broken lines. A series of orifices, one of which

is shown at 38, permits sub-atmospheric pressure existing in the throat of the variable venturi to influence the pressure in the chamber 24. Instead of the compression springs 13 and 14, two tension springs 39 and 40 connect the two diaphragms 12 and 21 together by means of a wire rod guided in the partition 40. The piezometer ring 33 is located on the engine side of the variable venturi and the fuel which discharges from the fuel chamber 16 flows through the pipe 19 into a chamber 41 located in a hollow streamlined bridge 42 which forms the central portion of the rectangular variable venturi. The fuel issues through openings 43 and 44 and entrained with it is a small quantity of air admitted through the opening 45.

Although it is no part of this invention, I have also shown the means for adding the extra fuel needed to prevent the ordinary air cooled airplane engine overheating (90% of airplane engines in use today are air cooled). These means consist of the fuel entrance 46 in which is located a fuel venturi 47, the differential pressures of which are used to move the diaphragm 48 and to open a needle valve 49 against the spring 50, and thus admit fuel to the passage 51, to which passage air is admitted through the opening 52 and the entrained fuel and air pass through the passage 53 to the chamber 41, whence it issues into the throat of the variable venturi formed between the throttles 34 and 35 and the central streamlined bridge 42. This invention is shown in Chandler Patent 2,125,886.

When the fuel flows past the venturi 47 it enters the chamber 15 past the inlet valve 11 controlled by the diaphragm 12 and then flows through the restricted opening 17 controlled by the barometric device 18 and flows then into the chamber 16 where the pressure created in the chamber 16 acts against the diaphragm 21 so as to cause the valve 20 to open and reduce the pressure in the chamber 16 below that in 15. This reduction in pressure corresponds to and is balanced by the difference between the pressure in the piezometer ring 33 and the pressure in the throat of the variable venturi when the throttle is wide open. Obviously this device would give rich mixture at closed throttle position and vice versa. When the throttle is in the intermediate position, as shown, a needle valve 54 operated by the lever 108 connected to the throttle 34 modifies the suction in the chamber 24 by admitting air at a relatively high pressure from the piezometer ring 33 through the passage 109. The pressure in 33 is necessarily higher than the pressure in the variable venturi where the velocity is at a maximum and the pressure is at a minimum. A restriction 55 determines the effect of the air admitted past the needle valve 54. A passage 110 permits free communication between the chamber 25 and the ring 33. In other words, at every position of the throttle, the pressure in the chamber 24 will be intermediate the pressure in the throat of the variable venturi and the pressure in the piezometer ring 33 on the downstream side of the variable venturi and the only time the device will function exactly as the device functions in Figures 1 and 2 and in the Peltz Patent 1,665,145, is when the throttle is wide open and the needle valve 54 closes the passageway in which it slides and prevents the piezometer ring 33 communicating with the chamber 24. The arm 108 is made adjustable relative to the throttle valve 34. The vapor escapes through the passage 111 into the ring 33 when the float 31 is off its seat.

The piezometer ring 33, at all times, communicates freely with the chamber 25 at the left hand side of the diaphragm 12, so that there is at all times a pressure difference between the chambers 24 and 25 responsive to air flow through the variable venturi causing a flow through the orifice 17 of the fuel in proportion to the air flow.

In Figure 4, an air entrance 60 is controlled by a throttle 61 and a manually operated lever 62 which is connected to the throttle lever 94 by a spring 63. The lever 65 pivoted on the pin 99 is connected to a rod 95 which engages with the lever 65 through a shoulder 64 on the rod 95, when the lever 62 is in the extreme closed position. After the throttle 61 is closed to the position determined by the stop 96, the manually operated lever 62 may be moved clockwise as far as the spring 63 will permit. During this movement, after the throttle 61 is closed to its idling position, the head 64 of the rod 95 engages with the lever 65 pivoted at 99 which is turned clockwise, the roller 66 is released from the shoulder 98 of the lever 65, and the spring 67 causes the diaphragm 74 to move down carrying with it the lever 68, and with it the valve 69 which positively shuts off the fuel. Thus, when the manually operated throttle lever 62 is moved clockwise into the position at which the engine is required to stop, the fuel is positively cut off and the danger of leakage, etc., eliminated. This device is therefore a safety device to prevent loss of fuel and the resultant fire hazard when a plane is re-started after standing still, with the engine stopped. When the throttle is first opened the reverse turn takes place, the rod 95 moving to the left, the lever 65 moving clockwise under the influence of the spring, the roller 66 being raised slightly by the shoulder 98, the lever 68 being raised slightly, and the valve 69 being raised slightly so as to admit a small quantity of fuel so that the engine can idle. The moment the engine picks up speed and the throttle 61 is opened, the depression in the Venturi throat causes the diaphragm to move and regulate the fuel flow according to the Peltz principle referred to.

The Venturi throat 71 is provided with a hollow passage 72 known in the industry as a piezometer ring which is connected with the air chamber 73 which is bounded on its lower side by the flexible diaphragm 74. Below the diaphragm 74 is the outlet fuel chamber 75 which is supplied with fuel through the opening 76 controlled by the needle 77 which is barometrically controlled by the three aneroid elements 78.

The fuel inlet chamber 79 is bounded on its lower face by the diaphragm 80 which is supported by the spring 81 which is stiff enough to create a pressure in the chamber 79 equal to the pressure created in the chamber 75 due to the stiffness of the spring 67. The chamber 82 which contains the spring 81 is in communication through the passage 83 with the air entrance 60 on the engine side of the throttle 61. The opening 83 is sufficiently restricted so that the following device will function instead of the ordinary acceleration pump. An air pump 84 is connected by the link 85 to the lever 94 and so to the throttle 61 so that every time the throttle is opened, air is compressed in the pump 84 and discharges through the passage 86 into the chamber 82.

The ordinary diaphragm operated mechanism

87 with needle 88 is provided to regulate the supply of fuel through the fuel entrance 90 and a vapor removing float 91 is also provided in the chamber 79 and the vapor discharges through the pipe 92 into the mixture outlet 93.

Operation

The operation follows closely that described in the Peltz Patent 1,665,145 above referred to. When the throttle is closed, or when the barometer falls in the case of Figures 2 and 3, and in the case of Figure 1 when the barometer pressure falls, the pressure in the fuel chamber 15 falls a corresponding amount. Although the pressure in the chamber 15 may be, and will be in the construction shown in Figure 1, at all times higher than atmospheric pressure, the barometric device 18 will respond as well to variations above atmospheric pressure as it will to variations in pressure below atmospheric pressure, and when the pressure in the air entrance 27 falls, the pressure in the fuel chamber 15 falls to a like degree. For example, the pressure in 15, Figure 1, falls from say 17 lbs. to 10 lbs. per square inch absolute. In the case of Figure 2, when the throttle 28 is closed and in Figure 3 when the two throttles 34 and 35 are closed, the pressure in the air chamber 25 falls because the pressure in the ring 33 falls. Therefore, the pressure of the liquid in the chamber 15 also falls. The barometric element 18 then expands and restricts the opening 17, in order to maintain the fuel ratio constant to compensate for the fall in air density.

The device shown in Figure 3 can be made to hold the basic fuel-air ratio constant. At wide open throttle when the valve 54 obstructs the passage between the annular chamber 33 and the chamber 24, the device functions as the device shown in Figures 1 and 2. At part throttle the needle valve 54 can be set, either by changing the taper on the needle or by moving the arm 98 relative to the throttle 34, to modify the effect of the pressure difference between the Venturi throat suction and the Venturi outlet suction, so as to prevent the excessive suction at part throttle producing excessively rich mixture.

In the construction shown in Figure 3, there is a slight leakage of fuel past the wire connecting the two tension springs 39 and 40. This will be corrected by the taper of the needle regulating the orifice 17.

The fuel needed to prevent the engine overheating can be furnished in the ordinary manner by the opening of the fuel needle 49. This last mentioned feature, of course, is no part of this invention. It is illustrated merely to show the adaptability of the Peltz principle to the device now in general use.

What I claim is:

A carburetor having an air entrance, a throttling means therein forming variable Venturi mixing chamber, a fuel entrance chamber, a fuel exit chamber, a restricted passage therebetween, means for maintaining a definite pressure difference in said fuel chambers at every air flow and at each position of the throttling means comprising a passage connecting the throat of aid variable Venturi with an air chamber controlling the pressure in said fuel exit chamber, a passage connecting the mixture outlet with an air chamber adapted to control the pressure in the fuel entrance chamber, valve means controlled by the throttle for reducing the effect of the difference between the air pressure on the engine side of the variable Venturi and the pressure in the throat of the variable Venturi when the variable Venturi throttle is in a partly closed position, said fuel chambers each having a flexible wall, said flexible walls forming one wall of each air chamber, a fuel entrance valve in said fuel entrance chamber adapted to be opened by an increase in air pressure acting on the flexible wall of said fuel entrance chamber, a fuel exit valve in said fuel exit chamber adapted to be opened by a decrease in air pressure acting on the flexible wall of said fuel exit chamber.

STANLEY M. UDALE.