F. HILBURGER.

GRATE.

APPLICATION FILED MAR. 17, 1910.

965,186. Patented July 26, 1910.

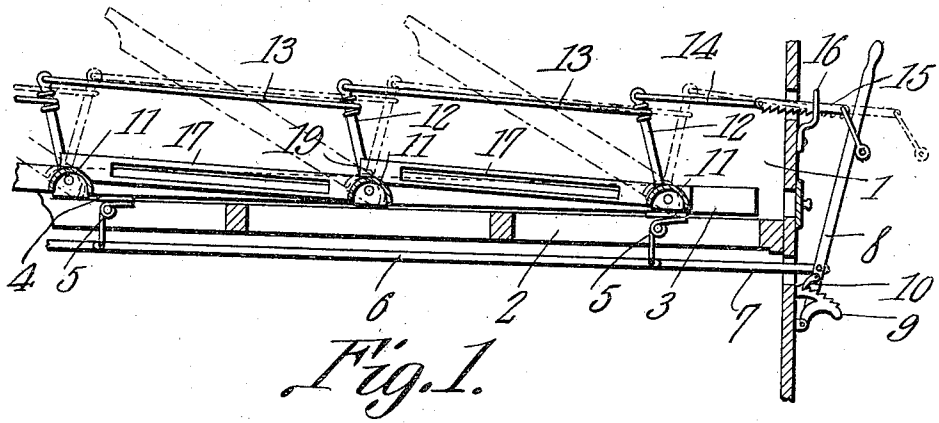

Fig. 1.

Fig. 2.

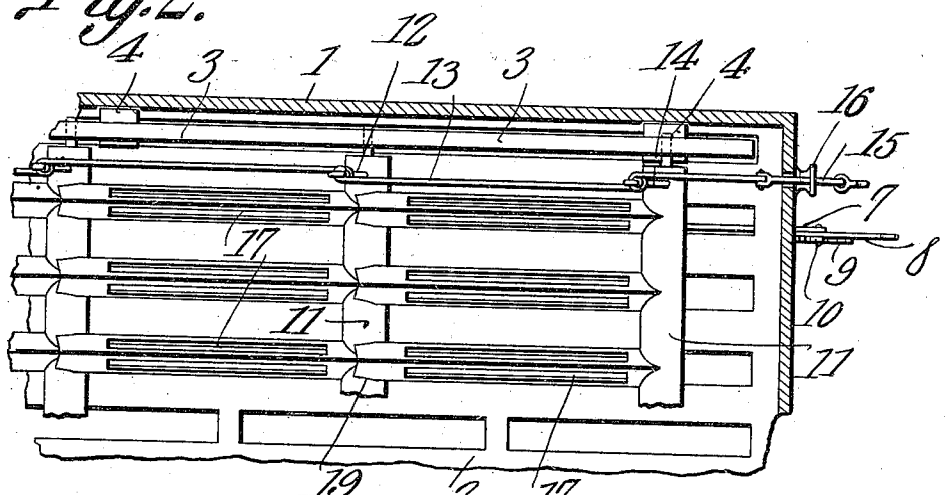

Fig. 4.

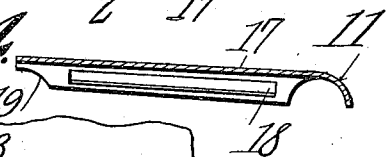

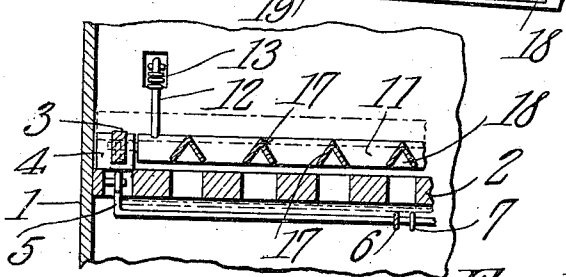

Fig. 3

Witnesses

E. F. Kleinert

J. T. Lawson

Inventor

Fred Hilburger.

By C. A. Snow & Co

Attorney

THE NORRIS PETERS CO., WASHINGTON, D. C.

UNITED STATES PATENT OFFICE.

FRED HILBURGER, OF CASTLE ROCK, COLORADO.

GRATE.

965,186. Specification of Letters Patent. **Patented July 26, 1910.**

Application filed March 17, 1910. Serial No. 549,973.

To all whom it may concern:

Be it known that I, FRED HILBURGER, a citizen of the United States, residing at Castle Rock, in the county of Douglas and State of Colorado, have invented a new and useful Grate, of which the following is a specification.

This invention relates to a fire ventilator and it consists in the novel construction and arrangement of its parts hereinafter shown and described.

The object of the invention is to provide a simple and effective device adapted to be easily and quickly adjusted to regulate the quantity of air which may pass through a bed of coals in a fire box and to provide means for leading the air thus introduced through the bed of coal to effectually ventilate the same and prevent the accumulation of gases in the bed of coals or in the fire box and thereby reduce the possibilities of explosion.

The ventilator may be made in many different forms and may be applied to fire boxes as an attachment or a permanent fixture.

With the above objects in view the ventilator includes one or more bars pivotally mounted and having integrally joined thereto flights which are adapted to lie over the grate spaces of the fire box and which are separated from each other over the bar or solid portions of the grate. When several flight bars are provided means is also provided for connecting them together whereby they may be swung upon their axes in unison and the flights upon one bar are of sufficient length when they are in their lowermost position to extend from that bar of which they are component parts to the next adjacent bar. The flights are preferably hollow or concaved upon their under sides which concavities or hollows form air passages as will be explained presently.

In the accompanying drawings:—Figure 1 is a vertical sectional view of a portion of a fire box showing the ventilator applied thereto. Fig. 2 is a top plan view of the same. Fig. 3 is a transverse sectional view of the same. Fig. 4 is a longitudinal sectional view of one of the flights of the ventilator.

As illustrated in the accompanying drawings the ventilator is shown as an attachment to a fire box but it is to be understood that the ventilator may if desired be built in the fire box at the time it is constructed. In either case the same principles of ventilation are involved.

As illustrated 1 indicates a fire box provided in its bottom with a grate 2 of any usual pattern. Side bars 3 are mounted upon blocks 4 which normally rest upon the upper surface of the grate 2. Bell cranks 5 are pivoted to the grate 2 and have their upper ends lying under the blocks 4. The lower ends of the adjacent bell cranks 5 are connected together by means of links 6 and a terminal link 7 connects the terminal bell crank 5 with a lever 8 which is fulcrumed at the outer side of the fire box 1. A ratchet segment 9 is located adjacent the lever 8 and said lever is provided with a pawl 10 which is adapted to engage the ratchet of the segment. Thus it will be seen that by swinging the lever 8 that the links 7 and 6 will be moved longitudinally and the bell cranks 5 will be rocked upon their pivots whereby the cross bars 4 may be raised or lowered and the parts mounted thereon correspondingly moved. Therefore means is provided for lifting the ventilator above or clear of the upper surface of the grate 2 whereby the said grate may be cleaned or relieved of ashes.

Flight bars 11 are journaled at their ends in the side bars 3 and are provided with upstanding arms 12 which are connected together by means of links 13. The terminal of the link 14 is connected with the terminal arm 12 and a rack bar 15 is pivotally connected with the terminal link 14 and passes through the front wall of the fire box 1. An eye 16 is mounted upon the front wall of the fire box 1 and the said bar 15 passes through the said eye. The teeth of the bar 15 are downwardly disposed consequently when the said bar 15 is resting in the eye 16 the lower edge portion of the opening in the eye 16 which receives the said bar is straddled by adjacent teeth of the bar. Therefore it will be seen that by adjusting the bar 15 longitudinally in the eye 16 a link 14 will move the links 13 longitudinally and the arms 12 will be swung about the axes of the flight bars 11. Each flight bar 11 is provided with a series of flights 17 which are preferably integral with their respective supporting bars. The flights 17 are adapted to operate in planes vertically above the spaces through the grate 2 as indicated in Fig. 3 of the drawings and when several

flight bars 11 are employed the flights 17 are of sufficient length so that their unattached ends may rest upon the upper surface of the next adjacent flight bar 11 in the manner indicated in Fig. 2 of the drawings. The under sides of the flights 17 are hollow or concaved as at 18. The said flight bars 11 at their free ends are recessed as at 19 in order to fit snugly upon the upper surface of the next adjacent flight bar 11. Inasmuch as the flights 17 are rigid with their respective supporting flight bars 11 when the said flight bars are turned upon their axes in the manner as above described the flights 17 are swung about the axes of the said flight bars and consequently the said flights may be brought from an approximately horizontal position into an inclined position at any desired angle. Inasmuch as the bed of the fire rests upon the said flight bars 11 and flights 17 when the flights 17 are swung into an inclined position their under sides provided with the hollows or concavities 18 constitute passages for leading air through the bed of coals.

It is of course understood that the more nearly vertical that the flights 17 are positioned the more direct will be the draft through the coals and the more nearly horizontal that the flights 17 are positioned the greater will be the check upon the draft. In fact when the free ends of the flights 17 are swung down so that their recesses 19 receive the upper surface of the adjacent flight bar 11 the draft through the grate is almost if not entirely cut off. By this arrangement it will be seen that a simple and effective device is provided for ventilating a fire and that by reason of such ventilation the liability of the accumulation of gases in the bed of coals and in the fire box proper is reduced to a minimum and the chance of explosion is correspondingly reduced.

Having described the invention what I claim as new and desire to secure by Letters Patent is:—

1. In combination with a fire box provided with a grate, a fire ventilator comprising a series of flight bars pivotally mounted, means operatively connecting the flight bars together to cause them to turn upon their axes in unison, means for turning the said flight bars, flights carried by the flight bars and arranged to operate over the grate spaces, said flights being of such a length as to extend from their supporting bars and have their free ends rest upon the upper surfaces of the next adjacent bars.

2. In combination with a fire box having a grate, a fire ventilator comprising a series of pivotally mounted flight bars, means operatively connecting the flight bars together to cause them to swing upon their pivots in unison, means for swinging the flight bars, flights attached to the bars and having their under sides hollowed, said flights arranged to operate over the grate spaces, said flights having their free ends recessed to receive the upper portions of the adjacent flight bars.

In testimony that I claim the foregoing as my own, I have hereto affixed my signature in the presence of two witnesses.

FRED HILBURGER.

Witnesses:
C. E. Doyle,
Geo. B. Pitts.