Dec. 10, 1968 S. R. GENSON 3,414,956

METHOD AND APPARATUS FOR WINDING PLURAL STRANDS

Filed Feb. 25, 1966 4 Sheets-Sheet 1

Fig. 1.

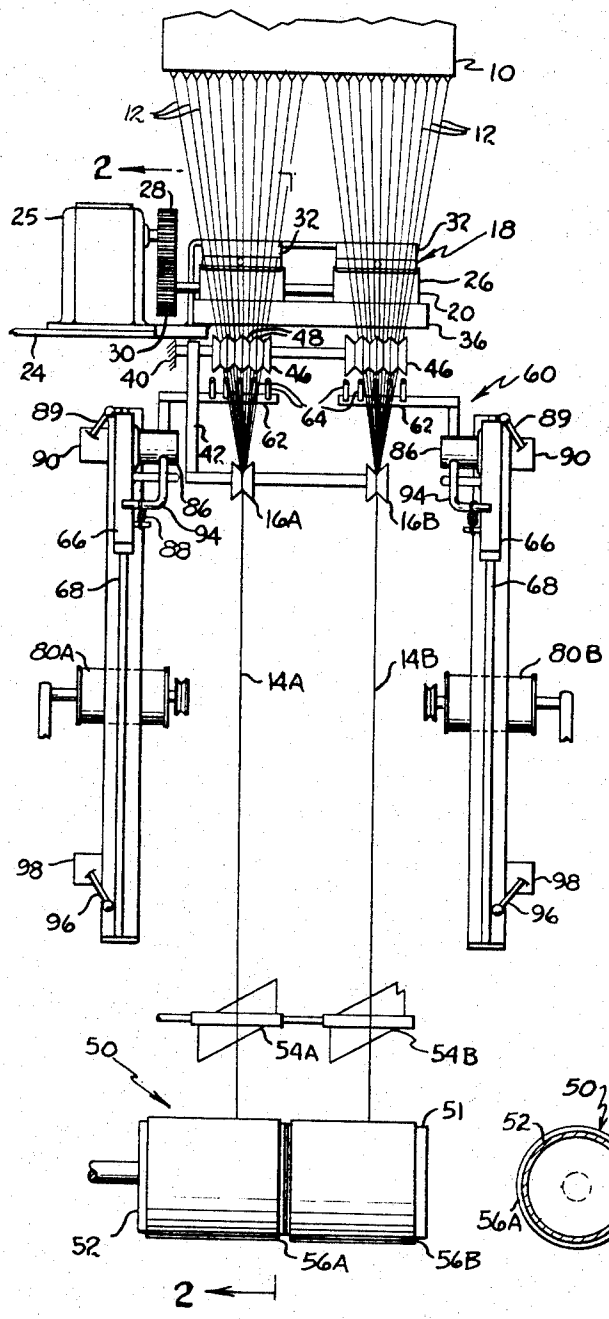

Fig. 2.

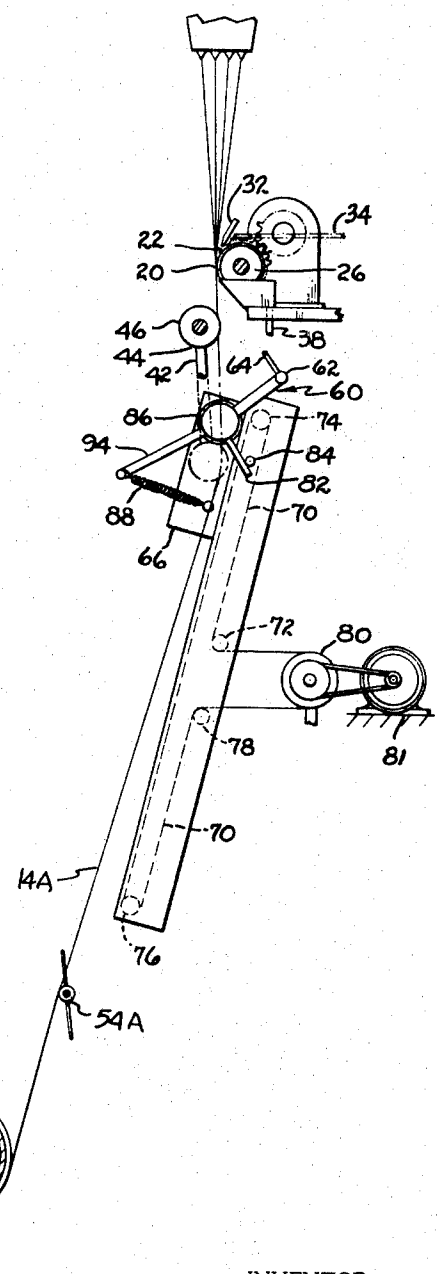

INVENTOR.
SAMUEL R. GENSON

BY John A. McKinney

ATTORNEY

METHOD AND APPARATUS FOR WINDING PLURAL STRANDS

Filed Feb. 25, 1966 4 Sheets-Sheet 2

Fig. 3.

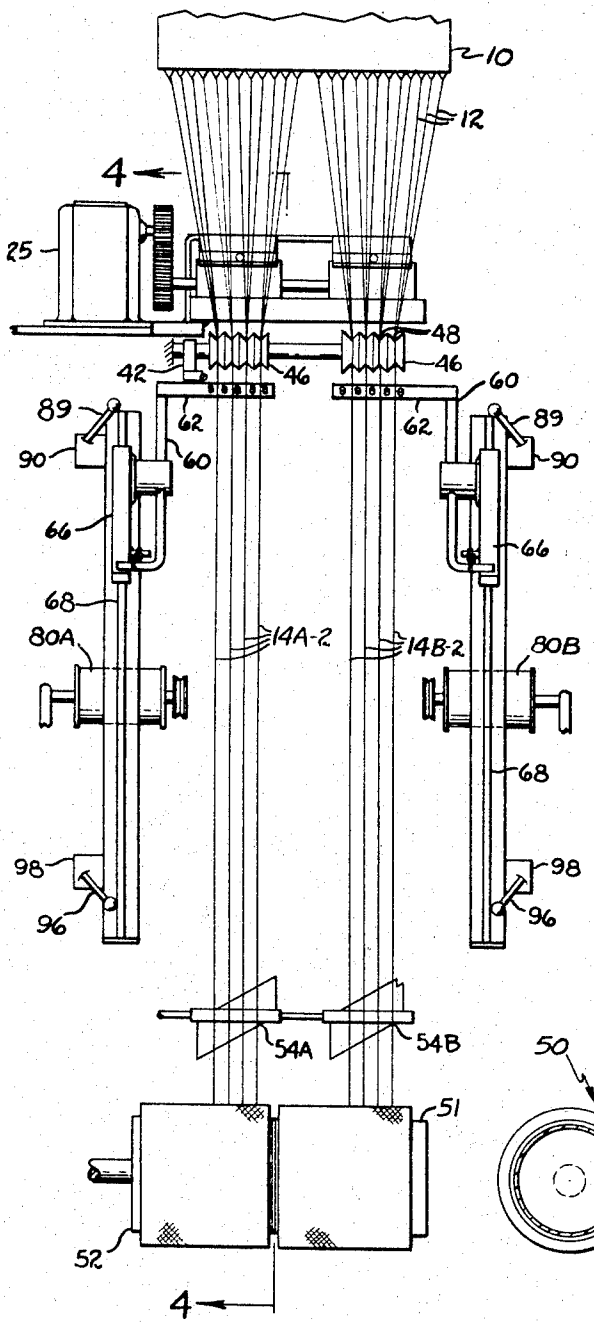

Fig. 4.

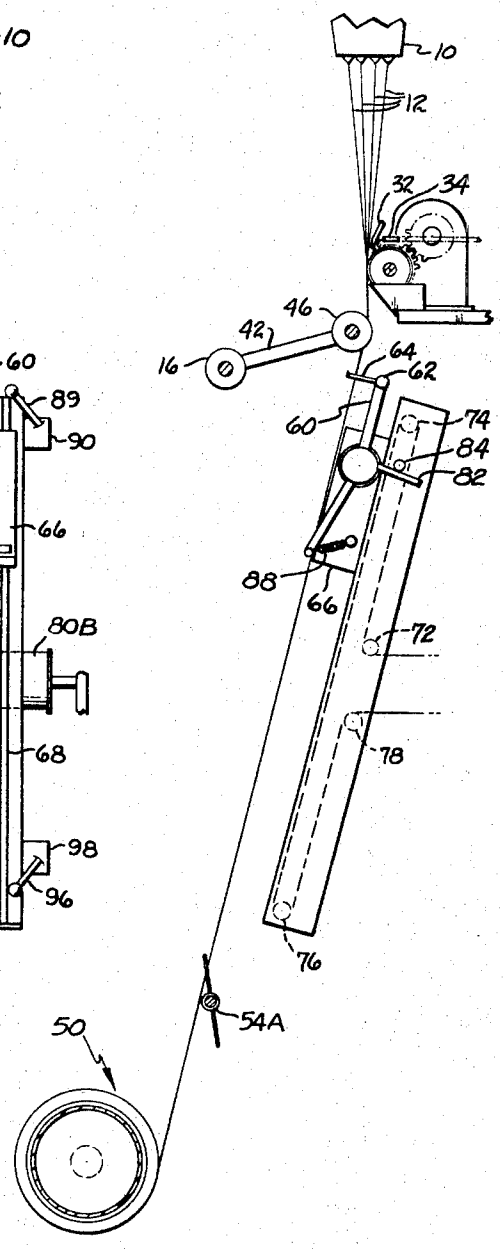

INVENTOR
SAMUEL R. GENSON
BY
John A. McKinney
ATTORNEY

METHOD AND APPARATUS FOR WINDING PLURAL STRANDS

Filed Feb. 23, 1966 4 Sheets-Sheet 3

Fig. 5.

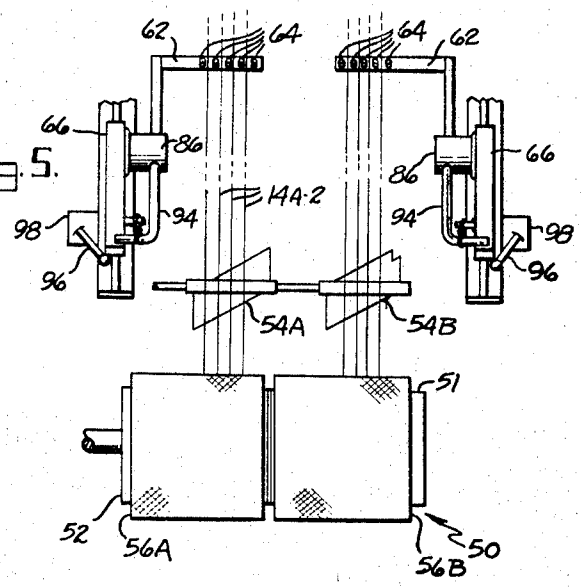

Fig. 6.

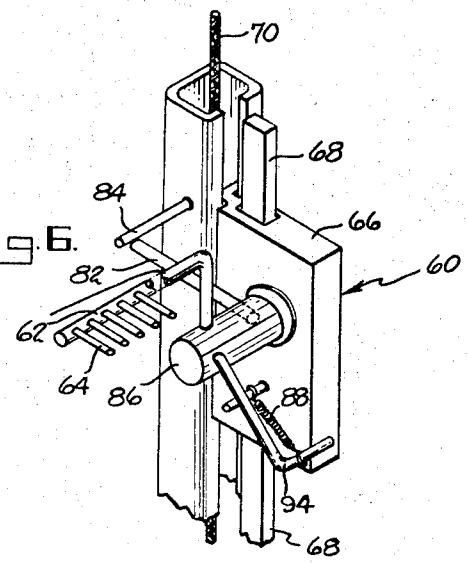

INVENTOR.
SAMUEL R. GENSON
BY
John A. McKinney
ATTORNEY

METHOD AND APPARATUS FOR WINDING PLURAL STRANDS

Filed Feb. 25, 1966 4 Sheets-Sheet 4

Fig. 8.

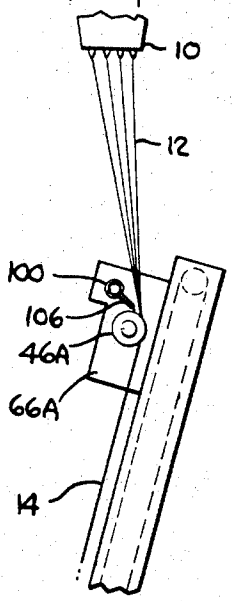

Fig. 7.

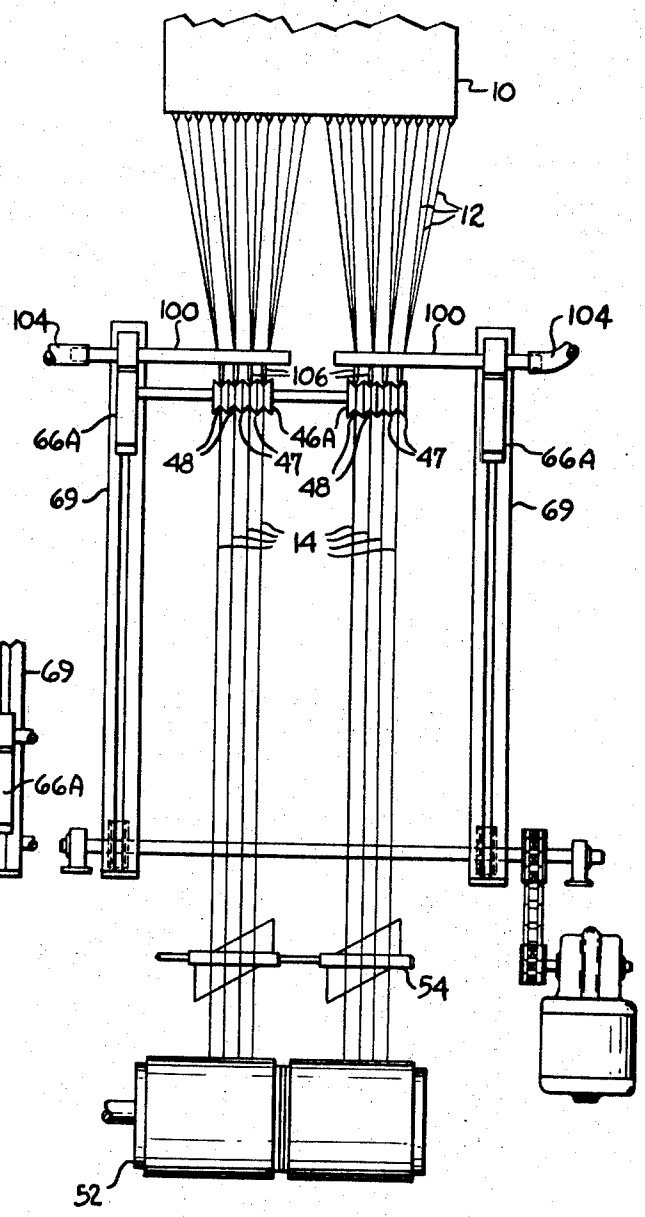

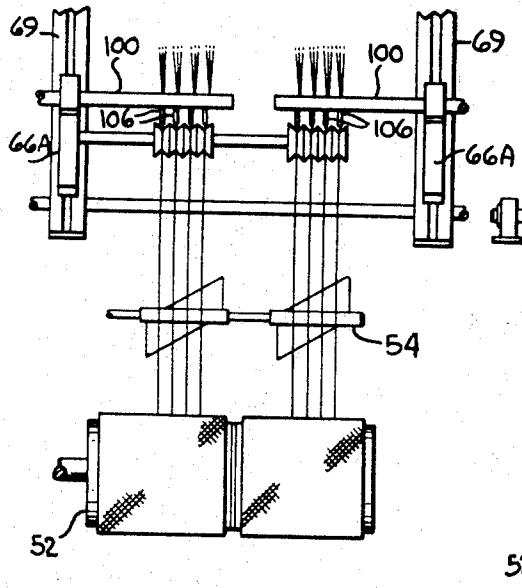

Fig. 9.

INVENTOR.
SAMUEL R. GENSON
BY
John A. McKinney
ATTORNEY

United States Patent Office

3,414,956

Patented Dec. 10, 1968

3,414,956
METHOD AND APPARATUS FOR WINDING PLURAL STRANDS

Samuel Richard Genson, Bowling Green, Ohio, assignor to Johns-Manville Corporation, New York, N.Y. a corporation of New York

Continuation-in-part of abandoned application Ser. No. 420,584, Dec. 23, 1964. This application Feb. 25, 1966, Ser. No. 536,522

15 Claims. (Cl. 28—59)

ABSTRACT OF THE DISCLOSURE

Method for winding a plurality of spaced-apart strands, each composed of a multiplicity of continuous filaments, in a package of a series of superimposed bights in spaced-apart relation, comprising initially maintaining division of the plural strands in spaced-apart relation at a location adjacent the continuous filaments source and advancing the dividing means to a position adjacent the location of the traversing and winding to limit the axial movement of the separated strands during traversing and winding, and apparatus therefor comprising a moveable dividing comb.

This application is a continuation-in-part of copending application Ser. No. 420,584, filed Dec. 23, 1964, now abandoned.

The present invention relates to the winding of strand material into package form. More particularly, it relates to improved method and apparatus for winding a plurality of spaced-apart continuous strands into a single package and forming a series of superimposed bights. More specifically, this invention relates to method and apparatus for producing a plural strand package wherein the strands are comprised of a multiplicity of filaments drawn from a single source, and to a method for winding the strands onto a package in spaced-apart relation which permits simultaneous unwinding of the individual strands.

The advantages of strand material as a reinforcing agent for plastic laminates is recognized by those working in the art. It has also been recognized that the reduction of the number of filaments per strand improves the surface of the laminate. The improved surface may be attributed to the reduction in the diameter of the strand, which reduction contributes toward a smoother surface finish and toward being wetted out more completely by the resin.

The general object of the present invention is to provide method and apparatus for winding a plurality of continuous strands onto a single package wherein the strands are maintained in spaced-apart relation.

A further object of the present invention is to provide method and apparatus for winding a plurality of continuous strands onto a package, a new type of combing device to facilitate the startup of the winding operation and to insure that the strands are maintained in spaced-apart relation.

Apparatuses which have been previously employed in producing a bulk strand product for use as a reinforcing material for resin laminates are disclosed in U.S. Patent No. 3,056,711 to Frickert and in U.S. Patent No. 3,072,-518 to White. In the method and apparatus disclosed in Frickert Patent No. 3,056,711 the groups of strand material are intermittently compacted in intimate side-by-side unitary relation in spaced zones along the length of the product to effect an integration thereof in the spaced zones. The instant invention is distinguishable from Frickert in that method and apparatus are provided for maintaining the groups of strand in spaced relation at the time that the strands are being wound onto the package

being formed. The instant invention, while more closely related to the method and apparatus disclosed in the Patent No. 3,072,518, White, provides improved method and apparatus to facilitate the startup of the winding operation and to insure that the strands are maintained in spaced relation during the winding operation.

In accordance with a preferred embodiment of this invention, a multiplicity of filaments are advanced from a source; during startup, the filaments are divided manually into two groups; and each group is converged into a single strand at its respective gathering or converging station. The strands are further advanced to a winding station where the strands are initially wound at the terminal portion of the winding support collectively. The process thus far described may be termed the first phase of the winding procedure. The strands then seek their own normally perpendicular advancing paths and are wound in spaced-apart relation during a second phase of the winding procedure. The attendant operator at the filament source then splits each of the two strands into two or more bundles by removing the primary converging device and positioning instead of secondary gathering or converging device having an increased number of converging grooves corresponding to the number of bundles to be formed. During this third phase of the winding procedure, the attendant operator positions a combing device having finger elements or tangs insertable between the formed bundles. The tangs are inserted between the bundles initially at the converging station. During this third phase of the winding procedure, the bundles would normally tend to converge together at the winding station. However, the combing device is carried downwardly to a position adjacent to the traversing mechanism at the winding station. The tangs of the combing device then serve to limit the axial movement of the separate bundles as they are traversed and maintain the bundles in spaced-apart relation as they are wound on the winding mandrels.

Other objects and advantages of the invention will become apparent during the course of the following description when taken in connection with the accompanying drawings.

FIG. 1 is a frontal schematic view of apparatus for producing plural strand packages illustrating the position of the combing device and related elements during an early phase of the winding procedure;

FIG. 2 is an end elevational view of the apparatus as shown in FIG. 1;

FIG. 3 is a view similar to FIG. 1 but illustrating the position of the combing device during another phase of the winding procedure;

FIG. 4 is an end elevational view of the apparatus as shown in FIG. 3;

FIG. 5 is a fragmentary frontal view of the apparatus shown in FIG. 1 but with the combining device in an advanced position during the main phase of the winding procedure;

FIG. 6 is a pictorial view of the comb of this invention and carriage means mounting the comb;

FIG. 7 is a frontal schematic view of an alternate embodiment of apparatus of this invention;

FIG. 8 is a fragmentary elevational view illustrating the upper portion of the apparatus shown in FIG. 7; and

FIG. 9 is a fragmentary frontal view of the lower portion of the apparatus shown in FIG. 7 during another phase of the winding procedure.

The present invention may be used in the formation of filaments, strands, and yarns from any one of a number of materials such as glass, artificial silk, nylon or cellulose acetate. In the present case, the invention will be described in connection with glass since the invention finds particular utility in the production of glass strands.

Referring to FIG. 1, there is shown a receptacle **10** adapted to contain a supply of molten glass and having a plurality of small apertures or orifices in the botton base portion thereof through which molten streams of glass flow by gravity or are exuded from the receptacle **10**. Filaments **12** formed from the streams of molten glass are drawn downwardly at high speeds and are gathered into one or more strands **14A** and **14B** by the action of one or more fiber gathering or converging bodies **16A** and **16B**. The gathering bodies **16A** and **16B** may form a part of a filament-treating station **18** where the filaments are customarily treated with suitable treating or lubricating liquid by contact with the wiping surface **20** of the treating station **18**. The wiping surface **20** is rotated to continuously provide fresh treating material **22** to the filaments **12** as they pass thereover.

In the embodiment illustrated in FIG. 1, the treating station **18** comprises a base **24** for supporting a drive motor **25** operatively connected to the roller applicator **26** through gears **28** and **30**. The base **24** also supports the doctoring blade **32**, which blade **32** controls the flow of the treating material to the surface **20** of the applicator roll **26**. The treating material is fed to the roller **26** just prior to the point of contact through conduit **34** that is connected to the treating material supply source. A catch basin may be provided beneath the roller **26** to catch the excess treating maetrial falling from the roller **26**. From this basin **36** the treating material may be return to the treating material supply syestem through conduit **38**.

Beneath the motor base **24** is a support **40** for supporting the primary converging or gathering wheels **16A** and **16B**. The primary gathering wheels **16A** and **16B** are mounted on a pivotable arm **42** for movement into and out of engagement with the filaments **12**. At an opposing end **44** of the arm **42** is what may be termed a secondary converging wheel **46** defining a plurality of grooves **48** for suitably converging a corresponding number of strands **14A–2** and **14B–2**.

In a typical installation such as shown in FIG. 1, the melting crucible generally has 400 orifices. The operator manually splits the 400 filaments into two groups or strands **14A** and **14B** of 200 filaments each. Each of these strands **14A** and **14B** is threaded over the primary gathering wheels **16A** and **16B** for advancement to the winding station **50** and onto the terminal portion **51** of the winding mandrel **52** during the initial winding procedure. Adjacent to the winding mandrel **52** is a primary traversing mechanism **54** for imparting a progressive and a regressive motion to the rotating supports or tubes **56**. During the first phase of the winding procedure, both of the strands **14A** and **14B** are wound on the terminal or flange portion **51** of the winding mandrel **52**. At this time, the primary traversing mechanism **54** is not operating. However, upon commencement of rotation of the primary traversing mechanism **54**, the two strands **14A** and **14B** are guided to their respective supports **56** on the winding mandrel **52**. The first strand **14A** moves to its respective primary traverse **54A** and the second strand **14B** moves to its corresponding primary traverse **54B**. During the second phase of the winding procedure, the attendant operator at the melting receptacle **10** pivots the primary gathering wheels **16A** and **16B** out of engagement with the strands **14A** and **14B** and consequently the strands **14A** and **14B** are caused to come into engagement with the secondary gathering wheels **46** which automatically separate the two primary strands **14A** and **14B** into four separate bundles which are gathered into what may be termed secondary strands **14A–2** and **14B–2**. Each of the secondary strands **14A–2** and **14B–2** contains approximately 50 filaments each. It will become apparent that the number of final strands can be varied by providing a suitable number of converging grooves **48**.

Combing mechanism **60**, up to this time, has been in a retracted or nonoperative position. However, after the two primary strands **14A** and **14B** have been split into secondary strands **14A–2** and **14B–2**, the comb **62** is pivoted so that the tangs **64** of the comb **62** are inserted between the divided filaments **14A–2** and **14B–2**. The comb **62** is on carriage means, for pivotal movement, including a support **66** carried by a slide rod **68** which slide rod serves to guide the comb **62** as it is lowered from a retracted position at the treating station **18** to an advanced position at the winding station **50**. The support **66** is moved through means comprising a driven cable **70**.

The cable **70** is guided over pulleys **72**, **74**, **76** and **78** to cable drum **80**. When the drum **80** is rotated in a clockwise direction the support **66** is raised; when the drum **80** is rotated in a counterclockwise direction the support is lowered. Suitable drive means, such as motor **81**, is provided to rotate the drum **80**.

Initially, upon the start-up winding of a new strand package, the comb **62** on the support bracket **66** is elevated from a lower position to the topmost position on the guide rod **68**. As the support **66** approaches the topmost position, pivotal arm **82** engages stationary pivot stop pin **84**. Further upward movement then causes support arm **86** to overcome the resistance of the spring **88** and to rotate and move the tangs **64** of comb **62** out of the normal position, within which position the tangs **64** separate the strands **14A–2** and **14B–2**. The support **66** then engages the actuating lever **89** of upper limit switch **90**. Actuation of the switch **90** cuts off the power to drive motor **81** and further upward movement of the support **66** is automatically discontinued.

Subsequently, when the cable **70** travels in a counterclockwise direction, as viewed in FIG. 3, the support bracket **66** moves downwardly, the support arm **86** rotates counterclockwise, by virtue of the action of spring **88** on arm **94**, until arm **94** bears against support bracket **66**. This later action serves to position the comb **62** and tangs **64** in the desired location in respect to the strands **14A–2** and **14B–2**. The support bracket **66** continues to move downwardly, with the comb **62** combing the strands **14A–2** and **14B–2**, until the support **66** engages the actuating lever **96** of lower limit switch **98**. Actuation of the switch **90** shuts off the motor **81** and the downward movement of the support bracket **66** is stopped. The support bracket **66** together with the comb **62** and the related appurtenances remain in the lower position during the remainder of the package winding cycle. During this time the comb serves to maintain the strands **14A–2** and **14B–2** in spaced-apart relation.

One of the results of moving the comb **62** down adjacent to the traverse mechanism **54** is a change in the effective pivot point of the individual strands **14A–2** and **14B–2** during the winding cycle. As the strands **14A–2** and **14B–2** approach the ends of their traverse, they bear against and pivot about the side surfaces of tangs **64**. Because each of the strands **14A–2** and **14B–2** has its own pivot point(s) and because the angular displacement, of a strand about a lower pivot point it greater than the angular displacement of a strand about a high pivot point (even though the axial displacement may be equal), there is little tendency for the individual strands **14A–2** and **14B–2** to become entangled with one another, particularly at the limits of their traversing strokes.

A preferred embodiment of the apparatus of this invention includes the secondary converging means **46**; however, in some instances by carefully positioning the tangs **64** of comb **62** between the filaments **12** at a zone intermediate the primary converger **16A** and **16B** and the roller applicator **26**, the comb **62** will perform the function of the secondary converger **46**. In such instances, the secondary converger **46** may be omitted.

While power means are shown in connection with the slide mechanism it will be apparent that a pull chain can be provided which the attendant operator may employ to manually raise the comb from the lower position to the upper position and that suitable latching means may be

provided at the uppermost position to retain the comb when desired. In such an arrangement the comb will descend by gravity when the operator releases the latch.

In the embodiment illustrated in FIGS. 7–9, the converging device **46A** serves a dual function, that of a converger for converging the filaments **12** into a plurality of strands **14**, and that of a combing device for combing the strands **14** after they are formed. The converging device **46A** is supported for movement with slide blocks **66A** along support bracket **69**. The slide block **66A** may be moved through means equivalent to that shown in FIGS. 1–5 in connection with support **66**, from a retracted position, near the filament forming station comprising the receptacle **10**, to an advanced position, which is toward and preferably near the traversing mechanism **54** and the winding mandrel **52**. During the advance movement, the ridges **47** between grooves **48** serve as combing fingers or tangs which maintain the several strands in spaced relation. In this embodiment the height of the ridges, as measured from the bottom of the grooves, may be considered as defining the longitudinal extent of the fingers.

Initially, upon the start up winding procedure of a new strand package with the apparatus shown in FIG. 7 the converger **46A** is in the elevated or retracted position. The attendant operator grasps all of the filaments **12** to be wound in a single package in a bundle and brings the bundle into contact with the converger **46A** to divide the filaments **12** substantially equally among the number of grooves **48** corresponding to the number of strands **14** to be formed. The several bundles are grouped at the winding mandrel **52** and started to be wound. At this time, the traversing mechanism **54** is not operating. The converger **46** is then advanced, by being lowered to a position near the traversing mechanism **54** (FIG. 9). The several strands **14** are spaced across the traversing mechanism **54** and across the package to be formed. The traversing mechanism **54** is started and the main winding operation commences with the strands **14** being wound in spaced apart relation.

FIGS. 7–9 also illustrate a further feature of this invention, that is of providing a filament treating station which is advanced and retracted in movements corresponding with the advancement and retraction of the combination converger and combing device **46A**. A manifold conduit **100** is provided for each of the treating stations and for convenience may be supported by and for movement with a slide block **66A**. The manifold **100** is suitably connected to main feed line (not shown) by means of a flexible tube **104** to accommodate movement with the slide block **66A**. A number, corresponding to the number of grooves in converger **46A**, of individual feed tubes **106** extend from the manifold **100** and lead directly to the top surface of the converger **46A** to supply a constant flow of liquid treating material to each of the converger grooves **48**. A valve (not shown) may be inserted in each of the said tubes **106** for regulating the individual flows. The provision of such feed means for feeding liquid treating material insures optimum application, particularly of lubricants to the individual filaments **12**, the formed strand **14**, and to the converger grooved surfaces and thus materially deters intra-abrasion of the filaments **12**.

What I claim is:

1. Apparatus for winding a package comprising a plurality of continuous strands, said apparatus comprising:

(a) a source of a multiplicity of continuous filaments;

(b) a rotatable support for advancing and winding said filaments;

(c) converging means for converging said filaments into a primary strand;

(d) comb means for combing as secondary strands the filaments of said primary strand; and

(e) carriage means mounting said comb means for movement from a retracted position adjacent said converging means to an advanced position adjacent to said rotatable support advancing and winding the said filaments.

2. Apparatus of claim **1** which further comprises:

(a) traversing means for subjecting said secondary strands, as they are being wound, to an alternately shifting traversing action to define a plural series of superimposed bights.

3. Apparatus of claim **1** which further comprises: electric power means for moving said carriage means, said electric power means including an electrical circuit comprising first switch means for automatically discontinuing the movement of said carriage means when said carriage means reaches said retracted position and secondary switch means for automatically discontinuing the movement of said carriage means when said carriage means reaches said advanced position.

4. Apparatus for maintaining a plurality of strands in spaced-apart relation when said strands are presented in an advancing path to a winding station, said strands also being subjected to a traversing action transverse to said advancing path, said apparatus comprising:

(a) a positionable comb;

(b) carriage means mounting said comb for advance movement toward said winding station to an advanced position and away from said winding station to a retracted position,

(c) said comb comprising a plurality of fingers, said fingers being positionable with their longitudinal extent transverse to said advancing path and transverse to the axial extent of said traversing action when said carriage means is in the retracted position,

(d) said comb being carried by said carriage means to said advanced position to maintain said strands in spaced-apart relation while said strands are being continuously wound.

5. The apparatus of claim **4** wherein a pair of said fingers are positioned in opposed spaced relation about each strand, said pair of fingers being spaced in a direction corresponding to the direction of the axial extent of said traversing action.

6. Apparatus for winding packages of continuous strands, each package comprising a plurality of strands, said apparatus comprising:

(a) a source of continuous filaments;

(b) powered winding mechanism including a rotatable support in which said filaments are wound;

(c) positionable primary converging means for contracting said filaments and converging them into a number of primary strands corresponding in number to the number of sections to be wound from said source;

(d) secondary converging means positionable to contact said filaments in a zone intermediate said source and the zone in which said primary converging means contact said filaments,

(e) said secondary converging means dividing the filaments of said primary strands to form secondary strands;

(f) comb means insertable between said secondary strands to maintain said secondary strands in laterally spaced relation with each other; and

(g) carriage means mounting said comb means for advanced movement from a retracted position, adjacent to said secondary converging means, to an advanced position, adjacent to said winding mechanism.

7. Apparatus of claim **6** wherein said primary and said secondary converging means are commonly mounted on an arm element, said arm element being positioned for pivotal movement in a manner whereby said secondary converging means automatically contacts said filaments when said primary converging means is withdrawn from contact with said filaments.

8. In winding mechanism for winding continuous filaments into a plurality of strands, converging means comprising an arm element commonly mounting a primary

converging element and a secondary converging element for pivotal movement in a manner whereby said secondary converging element automatically contact said filaments when said primary converging element is pivoted from contact with said filaments, each of said primary and secondary elements defining at least one converging groove, said secondary converging element defining a greater number of converging grooves than said primary converging element.

9. Apparatus for winding a package comprising a plurality of continuous strands, said apparatus comprising:

(a) a source of a multiplicity of continuous filaments;

(b) a rotatable support for advancing and winding said filaments;

(c) converging means for converging said filaments into a plurality of spaced apart strands; and

(d) carriage means mounting said converging means for advance movement from a retracted position near said source to an advanced position toward said rotatable support for advancing and winding the said filaments, said converging means maintaining the spaced apart relation of said strands during said advance movement.

10. Apparatus of claim **9** which further comprises: liquid treating material applicator means mounted for movement corresponding to that of said converging means and for directing liquid material to said converging means when said converging means is in said retracted position and in advanced position.

11. Apparatus of claim **9** which further comprises:

liquid applicator means including a feed tube for each of the strands to be formed with

said tube being mounted for movement corresponding to the advance movement of said converging means to provide treating material to said converging means while in said retracted position and while in said advanced position.

12. The method of winding a package comprising a plurality of continuous strands, said method including the steps of:

(a) providing a multiplicity of continuous filaments;

(b) commencing the winding operation with the plurality of filaments united in a single primary strand;

(c) dividing said filaments into a plurality of secondary strands, with each secondary strand comprising a plurality of filaments;

(d) progressively advancing said secondary strands to a rotating support; and

(e) combing the plurality of secondary strands in a retracted position where said secondary strands are defined to an advanced position adjacent to said rotating support to maintain said secondary strands in spaced-apart paths as they are being wound.

13. The method of claim **12** which further comprises the step of: subjecting said secondary strands to an alternately shifting traversing action to define a series of superimposed bights.

14. The method of winding a package comprising a plurality of continuous strands, said method including

(a) providing a multiplicity of continuous filaments,

(b) dividing said filaments into a plurality of strands, with each strand comprising a plurality of filaments;

(c) progressively advancing said strands to a rotating support; and

(d) combing a plurality of strands, starting from a retracted position where said strands are defined toward an advanced position approaching said support, to spread the strands comprising a group in spaced relation while they are being wound.

15. The method of winding a package comprising a plurality of continuous strands, said method including the steps of:

(a) providing a multiplicity of continuous filaments;

(b) dividing said filaments into a plurality of strands, with each strand comprising a plurality of filaments;

(c) commencing the winding operation by progressively advancing said strands to a rotating support and with the strands gathered in a group at said support; and

(d) combing a plurality of strands, starting from a retracted position where said strands are defined toward an advanced position approaching said support, to spread the strands comprising a group in spaced relation while they are being wound.

References Cited

UNITED STATES PATENTS

3,231,167	1/1966	Heuvelmans	156—441 XR
3,025,205	3/1962	Young	156—433 XR
3,273,812	9/1966	Lacasse	156—169 XR
3,334,980	8/1967	Smith	65—11

PHILIP DIER, *Primary Examiner.*

U.S. Cl. X.R.

156—175, 431; 65—3, 11; 28—75; 242—18