Aug. 2, 1955 T. A. RAINES 2,714,379

SPHYGMOMANOMETER

Filed May 26, 1954 2 Sheets-Sheet 1

Fig. 1

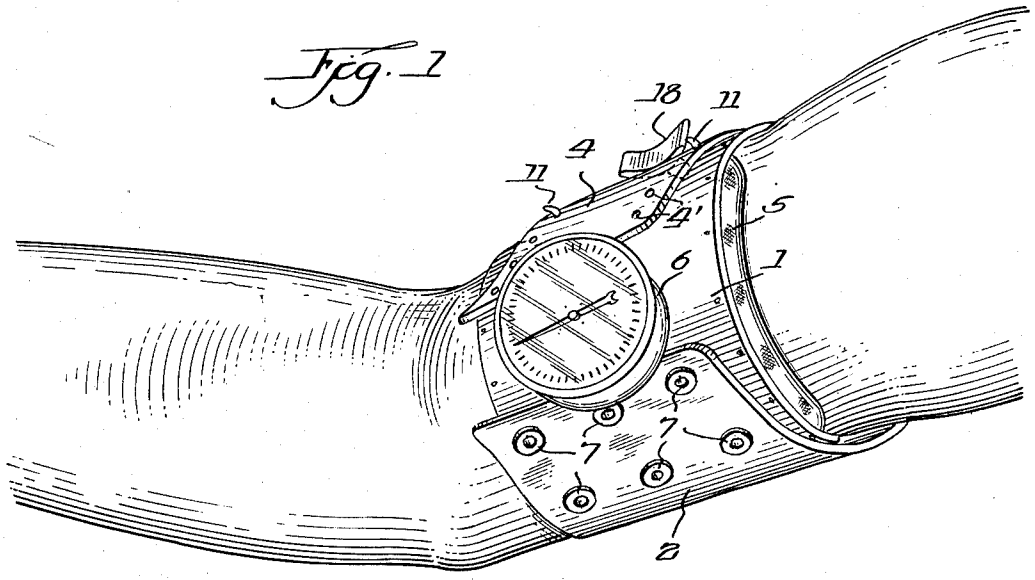

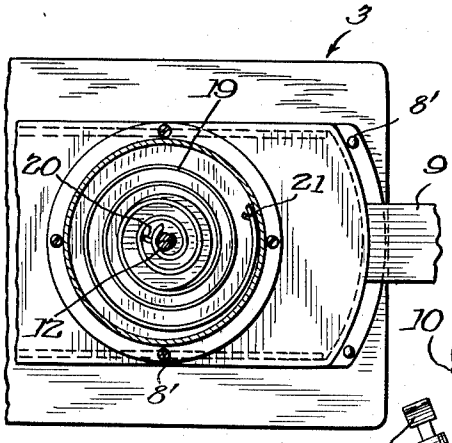

Fig. 7.

Fig. 2.

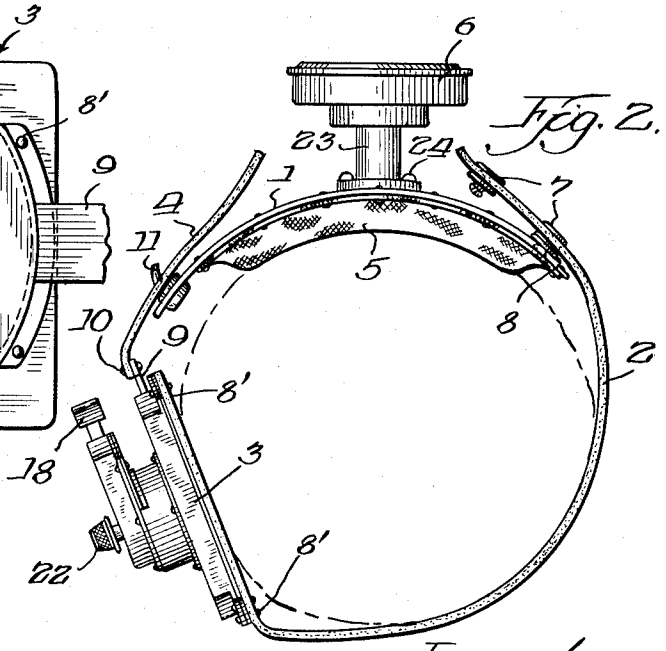

Inventor.
Thomas A. Raines.
By [signature] Atty.

Aug. 2, 1955 T. A. RAINES 2,714,379

SPHYGMOMANOMETER

Filed May 26, 1954 2 Sheets-Sheet 2

Fig. 3.

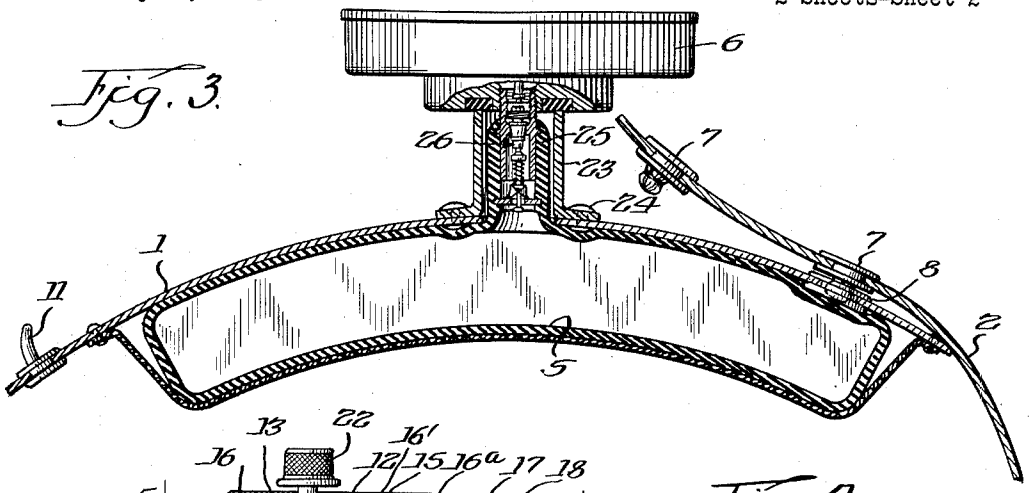

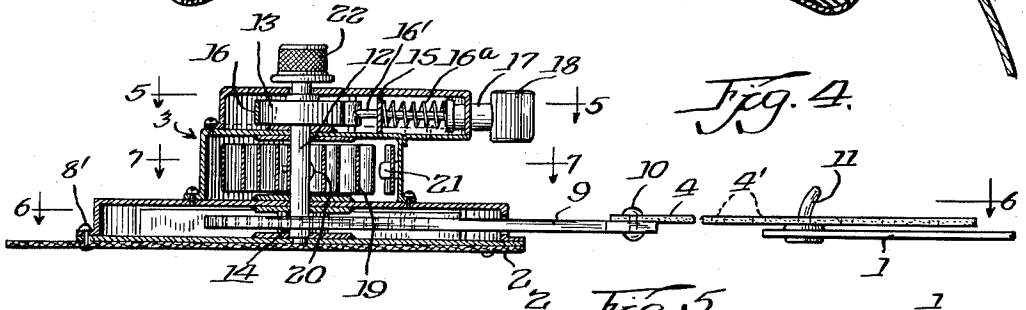

Fig. 4.

Fig. 5.

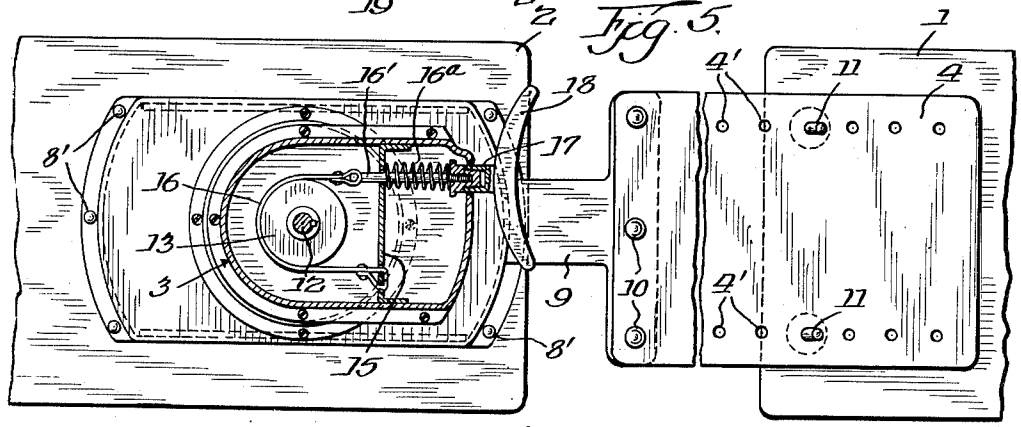

Fig. 6

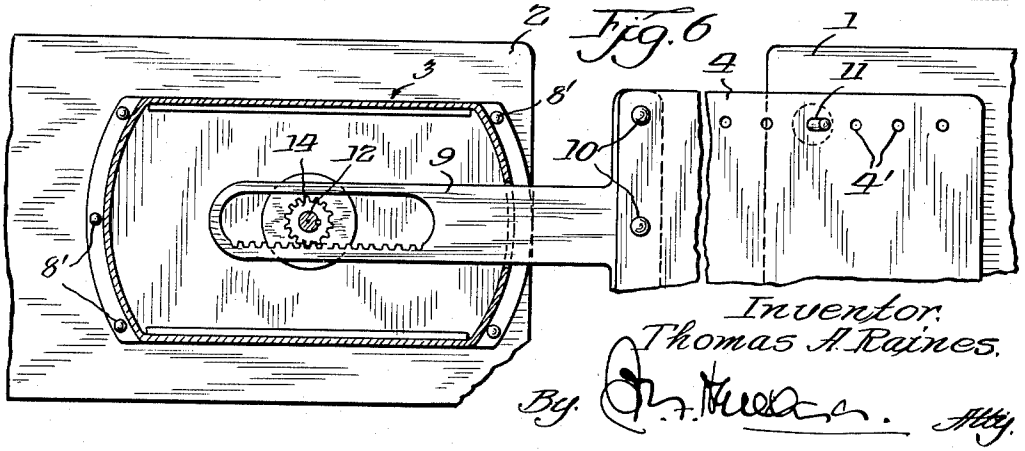

Inventor.
Thomas A. Raines.
By. [signature] Atty.

United States Patent Office 2,714,379 Patented Aug. 2, 1955

2,714,379

SPHYGMOMANOMETER

Thomas A. Raines, Bellwood, Ill., assignor of twenty per cent to Hannah E. Tueffel, twenty per cent to George N. Guerine, twenty per cent to John D. Iacono, and ten per cent to Edmund G. Brust, Jr.

Application May 26, 1954, Serial No. 432,400

4 Claims. (Cl. 128—2.05)

This invention relates to improvements in sphygmomanometers such as used in cardiac diagnostic and similar work.

It is a principal object of the invention to provide a device for the taking of or ascertaining diastolic or systolic blood pressure so constructed that it can be conveniently and quickly attached to the arm or other limb of a person; will include a minimum of parts, each of rugged, strong and operatively dependable form, and capable of easy and accurate reading.

In the now prevalent types of sphygmomanometers, operative attachment or positioning of the same on the limb of a person is effected, first by placing an inflatable bag adjacent a portion of an artery; second, securing the bag in such placement by means of a wrap-about band which is engaged about the limb and then secured, and third, inflating the bag to a substantially predetermined degree of pressure. A gauge, usually a manometer, is attached to and communicates with the inflated bag, and a hand pump equipped with a manually operable pressure release valve is also attached to and communicates with said bag. Such devices are unduly complicated and difficult of attachment and useage particularly, because of the burdensome character of the attachments. Moreover, because of their constructions, they are prone to malfunction.

By and through the medium of my invention, I provide a sphygmomanometer which is advantageously compact, unbulky and substantially unitary, one which will accurately and faithfully transmit impulses to the gauge or manometer particularly because of its compactness, and one which can be rapidly and accurately read and is comparatively inexpensive and rugged; moreover, an instrument wherein the pressure applying means and the manometer or other type of gauge are in close and convenient relationship, hence, enabling a user of the instrument to effect its operative attachment to a limb of a person and to have the instrument, when so attached, occupy a minimum of area without those obvious disadvantages hereinabove stated.

The foregoing, as well as other objects, advantages and meritorious teachings of my invention, will be in part obvious and in part pointed out in the following detailed disclosure thereof, when taken in conjunction with the accompanying drawings, it being understood that the form of the invention presented herein is a precise and what is now considered to be the better mode of embodying its principles, but that other modifications and changes may be made in specific embodiments without departing from its essential features.

In the drawings:

Figure 1 is a perspective of my invention in operatively attached position on the arm of a person.

Figure 2 is a side elevation of the improved sphygmomanometer as attached to a person's arm, the latter being shown in dotted lines.

Figure 3 is an enlarged detail in longitudinal section through the plate received pneumatic impulse transmitting

bag, the arm attaching devices and a portion of the impulse registering and indicating means mounted on the plate and communicating with said bag.

Figure 4 is an enlarged vertical section through the motor casing, the spring motor for the pinion carrying driven shift and rack bar and the adjustable band connecting means.

Figure 5 is a horizontal section taken on the line 5—5 of Figure 4 looking in the direction in which the arrows point.

Figure 6 is a horizontal section taken on the line 6—6 of Figure 4 looking in the direction in which the arrows point, and,

Figure 7 is a similar and fragmentary section taken on the line 7—7 of Figure 4, looking in the direction in which the arrows point.

Referring in detail to the accompanying drawings, my improved sphygmomanometer comprises an arcuate substantially non-flexible plate 1, a flexible securing band 2, a motor casing 3, an adjustable connecting strap 4, a pneumatic bag 5 fixedly positioned adjacent the inner or under side of the plate 1, and an impulse registering and indicating means, usually a manometer, 6 fixedly mounted on and intermediately of the outer side of the non-flexible arcuate plate 1.

One end portion of the flexible band 2 is provided with relatively spaced elements 7 of separable types of fastener devices, while companionate separable fastener elements 8 are mounted on the outer side of the near end of plate 1. Thus, adjustable connection can be effected between the adjacent end portions of said plate 1 and said flexible band 2.

The remaining end of the flexible band 2 is connected, at 8', to the adjacent side portion of the motor casing 3.

A rack bar 9, hereinafter more fully described, is slidably received into the lower portion of the motor casing. The outer end of said bar has an adjacent end of the connecting strap 4 secured thereto, as at 10. This strap 4 is provided with series of relatively equi-spaced openings 4' adapted to be selectively engaged over anchoring fingers 11 fixedly mounted on the outer side of the opposite end or side portion of the arcuate plate 1; hence permitting of an adjustable connection therewith.

A pneumatic bag 5, as above stated, is fixedly mounted adjacent and over the normally under side of the plate 1. It is closed or air tight and its size is sufficient to the extent that it will amply engage over and against an artery in the limb of a person upon whom the sphygmomanometer is to be attached, as for example, effectually engaged over and against the brachial artery.

The motor casing 3 receives therein a longitudinally disposed driven shaft 12 journalled in suitable bearings fixedly mounting a circular brake drum 13 on its outer end portion and a pinion 14 on its inner end portion. At this point it will be noted that the casing 3 is divided into three substantially separate compartments.

The inner or basal compartment receives the pinion 14. A way is formed in one side thereof and permits the aforesaid slidable entry of the rack bar 9 thereinto and its meshing with the pinion in the manner shown in Figures 4 and 6.

The outer compartment receives and houses the circular brake drum 13 on the outer end of the driven shaft 12; also, a transversely disposed partition and anchoring wall 15 is provided within the same. One end of a flexible brake band 16 is anchored to a portion of the wall and has peripheral engagement with the drum 13. Its remaining end is connected to a pin 16' slidably engaged through the wall 15 and with a male element which is threadedly engaged in the cup-like element of a coupling 17 mounted on the inner side of a finger engaging piece

18 exteriorly of said casing outer compartment. An expansion coiled spring 16a is disposed about a portion of the pin 16' and has end bearing on the wall 15 and the adjacent end of the male coupling element. Thus, the brake band 16 is normally under spring tension and is maintained in frictional braking contact with the brake drum periphery. However, as and when the finger piece 18 is thrust inwardly, the braking action of the bank will be neutralized, thereby allowing rotation of the driven shaft 12 and the drum 13.

The intermediate compartment of the casing houses a flat strip coiled spring 19, one end of which is pinned at 20 to the driven shaft 12, while its opposite end is anchored at 21 to an appropriate portion of the casing.

In order that the spring 19 may be placed under a tension whereby to impart motive power to the driven shaft 12, the outer end of said shaft is extended beyond the outer side wall of the casing 3 and mounts a knob 22 thereon to facilitate its manual turning in a direction to wind the spring; suitable and usual means (not shown) being provided to the shaft to prevent its rotation in a direction which would unwind the spring.

The impulse registering and indicating device or manometer 6 may be of any suitable type. It is mounted on a nipple-like sleeve 23 basally attached, as at 24, to an intermediate portion of the outer side of the non-flexible arcuate plate 1. A nipple 25 is extended from the pneumatic bag 5 into the sleeve and receives therein a spring actuated check valve assembly 26. As and when the device 6 is mounted on the outer end of the sleeve 23, the check valve 26 is opened and so retained. Hence, constant communication is effected between the bag interior and said device. Should the device be removed or disengaged from the sleeve 23, the check valve assembly within the nipple 25 will close immediately, thereby preventing the loss of pneumatic pressure from within the bag 5. The properly calibrated dial of the device 6 is outwardly faced as clearly shown in Figure 1. Therefore, it may be accurately and conveniently observed and read during usage of the instrument.

In usage of the improved sphygmomanometer, the band 2 is engaged about a portion of the limb of a person, i. e., about or around the upper portion of a person's arm resting over the brachial artery. The connection of the band 2 to the non-flexible arcuate plate 1 through the separable fastening devices 7—8 having been effected, the motor casing 3 is placed in the position shown in Figure 2. Properly selected openings 4' within the strap 4 end portion are engaged over the anchoring fingers 11 mounted on the adjacent side portion of the plate 1. Thereupon, the rack bar 9 is moved inwardly into the inner compartment of the casing 4 sufficiently to effect the desired tension, with the plate 1 and the pneumatic bag 5 resting over the artery. This attained tension is sufficient to stop the pulse. At such time, the sweep indicator on the manometer will have been moved to a position to give the correct reading of the blood pressure—this being the systolic pressure.

To determine the diastolic pressure, the user of the instrument now engages the finger piece 18 and moves the same inwardly to an extent such as will permit the brake band 16 to be somewhat loosened with relation to the brake drum 13 mounted on the outer end of the driven shaft 12. By regulating the extent of inward thrust of the finger piece 18, the rate of travel or speed of the driven shaft 12, under urge of the previously tensioned motor coiled spring 19, will also be regulated. In consequence, the tension of the limb encircling portion of the instrument will be gradually diminished and the pulsations from the artery over which the plate 1 is engaged, will be received by the pneumatic bag 5 and transmitted to the sweep indicator hand of the manometer 6. In this manner, the diastolic pressure of the person may be ascertained.

Should it be desired to briefly or momentarily maintain a predetermined tension on and about the arm of a person whose blood pressure is being tested with the instrument, the user thereof need only disengage his finger from the piece 18. Thereupon the coiled spring 16a will act to immediately return the pin 16' to its initial position and to brakingly reengage the brake band 16 with the periphery of the driven shaft mounted brake drum 13.

Because of the adjustable connections of the flexible band 2 and the strap 4 with the non-flexible arcuate plate 1 through the aforesaid fastening and/or anchoring devices, it will be understood and appreciated that my improved sphygmomanometer may be successfully attached to and about, and used in connection with various sizes of human limbs.

I claim:

1. A sphygmomanometer, comprising a non-flexible plate, a flexible band adjustably connected at one end to one side of the plate, a casing connected at one side to the remaining end of the band, a pneumatic bag fixedly adjacent the inner side of the plate, impulse registering and indicating means mounted on the outer side of the plate communicating with the bag, a pinion carrying driven shaft mounted in the casing, means in said casing for imparting selectively modulatable rotation to said shaft, a rack bar slidably engaged within said casing meshing with the pinion, and means adjustably connecting the remaining side of the plate to the rack bar.

2. A sphygmomanometer, comprising a non-flexible mounting plate, a pneumatic bag fixedly adjacent the inner side of the plate, a flexible band adjustably connected at one end to one side of the plate, impulse registering and indicating means mounted on the outer side of said plate communicating with the interior of said bag, a casing connected at one side to the remaining end of the flexible band, a pinion carrying driven shaft mounted in the casing, motive means within said casing connected to said driven shaft, means for selectively modulating operation of said motive means, a rack bar slidably received within said casing from one side thereof meshing with the pinion, and means adjustably connecting the remaining side of the plate to the rack bar.

3. A sphygmomanometer, comprising a non-flexible mounting plate, a pneumatic bag fixedly adjacent the inner side of the plate, a flexible band adjustably connected at one of its ends to one side of the plate, impulse registering and indicating means mounted on the outer side of said plate communicating with the interior of said bag, a casing connected at one side to the remaining end of the flexible band, a driven shaft mounted in the casing and extending for a distance beyond the normally outer side thereof and headed for manual engagement, a brake drum on and fixed to a portion of said shaft, braking means normally engaged with said drum, manually operable means supported by the casing and extending without the same connected to said braking means for disengaging the same, at times, from said drum, motive means within the casing connected to said driven shaft, a pinion on the driven shaft within the casing, a rack bar slidably received within the casing from one side thereof meshing with the pinion, and a strap connected to the outer end of said rack bar, and means for adjustably detaching said strap to the remaining side of said plate.

4. A sphygmomanometer, comprising a non-flexible mounting plate, a pneumatic bag fixedly adjacent the inner side of the plate, a flexible band, separable fastener means on one side of said plate and on one end of said band whereby to adjustably interconnect the same, impulse registering and indicating means mounted on the outer side of said plate communicating with the interior of said bag, a casing connected at one side to the remaining end of said flexible band, a driven shaft journalled in bearings within said casing, a brake drum fixedly mounted on said shaft, a brake band within the casing normally peripherally engaging said brake drum, man-

ually operable means in the casing connected to said brake band and operable from without the casing whereby to disengage the same from the brake drum, at times, a flat strip coiled spring engaged about the driven shaft and arranged within said casing one end of which is connected to the driven shaft and the other end connected to a portion of the casing, a pinion fixedly mounted on the driven shaft within the casing, a rack bar slidably received within said casing from that side thereof opposite its connection with said remaining end of the flexible band and having its outer end portion without said casing, and a strap connected to said outer end portion of the rack

bar detachably and adjustably connectable to the remaining side of the plate.

References Cited in the file of this patent

UNITED STATES PATENTS

1,500,629	Levy	July 8, 1924

FOREIGN PATENTS

203,545	Switzerland	Oct. 16, 1939
894,655	France	Jan. 3, 1945